CONTENTS

COVER PAGE AND INTRODUCTION **15**

DATED 5th October 2006 THE PARTIES (1) and DCUSA LIMITED (2) DISTRIBUTION CONNECTION AND USE OF SYSTEM AGREEMENT 16

NOTE 16

INTRODUCTION 16

SECTION 1: GOVERNANCE AND CHANGE CONTROL **18**

SECTION 1.A - PRELIMINARY **19**

1. DEFINITIONS AND INTERPRETATION 20

2. COMMENCEMENT AND DURATION 37

3. DCUSA OBJECTIVES 38

4. ACCESSION OF ADDITIONAL PARTIES 40

SECTION 1.B - GOVERNANCE **42**

5. FUNCTIONS AND CONSTITUTION OF THE PANEL 43

6. PANEL MEMBERS 47

7. OPERATION OF THE PANEL 52

8. COSTS OF THE DCUSA 58

SECTION 1.C - CHANGE CONTROL **63**

9. CHANGE CONTROL 64

10. CHANGE PROPOSALS 65

11. ASSESSMENT PROCESS 72

12. VOTING 80

13. THE CHANGE DECISION 84

14. IMPLEMENTATION 89

SECTION 2: COMMERCIAL ARRANGEMENTS **91**

SECTION 2.A - DISTRIBUTOR TO SUPPLIER/GENERATOR RELATIONSHIPS **92**

SCOPE OF SECTION 2A 93

15. INTERPRETATION OF SECTION 2A 94

16. CONDITIONS PRECEDENT 96

17. CONTRACTS 97

18. USE OF SYSTEM 100

19. CHARGES 102

20. AGGREGATED BILLING AND PAYMENT 107

21. SITE-SPECIFIC BILLING AND PAYMENT 108

22. TRANSACTIONAL CHARGES 110

23. PAYMENT DEFAULT 111

24. SECURITY COVER 112

25. ENERGISATION, DE-ENERGISATION AND RE-ENERGISATION 113

26. COMPLIANCE WITH THE DISTRIBUTION CODE 120

27. METER OPERATION CODE OF PRACTICE 121
28. COMPLIANCE WITH RADIO TELESWITCH AGREEMENT 122
29. METERING EQUIPMENT AND METERING DATA 123
30. PROVISION OF INFORMATION 126
31. DEMAND CONTROL 133
32. REVENUE PROTECTION 134
32B. ENERGY THEFT CONSOLIDATION 134
33. GUARANTEED PERFORMANCE STANDARDS 136
34. CONFIDENTIALITY RESTRICTIONS ON THE COMPANY 138
35. CONFIDENTIALITY RESTRICTIONS ON THE USER 140
35A. PROVISION OF COST INFORMATION REVIEW PACK 141
35C. PROVISION OF AN EMBEDDED CAPACITY REGISTER 142
SECTION 2.B - DISTRIBUTOR TO DISTRIBUTOR/OTSO RELATIONSHIPS 144
SCOPE OF SECTION 2B 145
36. INTERPRETATION OF SECTION 2B 146
37. CONDITIONS PRECEDENT 148
38. BILATERAL CONNECTION AGREEMENTS 149
38.A. CURTAILMENT 150
39. THE USER'S RIGHT TO BE CONNECTED AND ENERGISED 153
40. USE OF DISTRIBUTION SYSTEM 156
41. ENERGISATION, DE-ENERGISATION AND RE-ENERGISATION 157
42. METERING EQUIPMENT AND DATA 163
43. CHARGES 166
44. BILLING AND PAYMENT 169
45. TRANSACTIONAL CHARGES 170
46. PAYMENT DEFAULT 171
46A. EDNO UMS CHARGES 171
47. SECURITY COVER 173
48. COMPLIANCE WITH CODES 174
49. GUARANTEED PERFORMANCE STANDARDS 175
50. CONFIDENTIALITY RESTRICTIONS ON THE COMPANY 177
51. CONFIDENTIALITY RESTRICTIONS ON THE USER 179
52. MODIFICATIONS 181
SECTION 2.C - DISTRIBUTOR TO GAS SUPPLIER RELATIONSHIPS 183
SCOPE OF SECTION 2C 184
52A. INTERPRETATION OF SECTION 2C 184
52B. DE-ENERGISATION AND RE-ENERGISATION WORKS 185
52C. METER OPERATION CODE OF PRACTICE 187
52D. PROVISION OF INFORMATION 188

52E. CONFIDENTIALITY RESTRICTIONS ON THE COMPANY 188
52F. CONFIDENTIALITY RESTRICTIONS ON THE GAS SUPPLIER 190
SECTION 2.D - ELECTRICITY SUPPLIER TO GAS SUPPLIER RELATIONSHIPS 193
SCOPE OF SECTION 2C 194
52G. INTERPRETATION OF SECTION 2D 194
52H. DE-ENERGISATION AND RE-ENERGISATION WORKS 195
52I. METER OPERATION CODE OF PRACTICE 198
52J. PROVISION OF INFORMATION 198
52K. CONFIDENTIALITY RESTRICTIONS ON THE GAS SUPPLIER 198
52L. CONFIDENTIALITY RESTRICTIONS ON THE ELECTRICITY SUPPLIER 200
SECTION 2.E - DISTRIBUTOR TO THIRD PARTY ELECTRICITY SUPPLIER RELATIONSHIPS 203
SCOPE OF SECTION 2E 204
52M. INTERPRETATION OF SECTION 2E 204
52N. DE-ENERGISATION AND RE-ENERGISATION WORKS 205
52O. METER OPERATION CODE OF PRACTICE 206
52P. PROVISION OF INFORMATION 206
SECTION 2.F - ELECTRICITY SUPPLIER TO THIRD PARTY ELECTRICITY SUPPLIER RELATIONSHIPS 207
SCOPE OF SECTION 2F 208
52Q. INTERPRETATION OF SECTION 2F 208
52R. PERMITTED THIRD PARTY METERING WORKS AND DE-ENERGISATION AND RE-ENERGISATION WORKS 209
52S. METER OPERATION CODE OF PRACTICE 210
52T. PROVISION OF INFORMATION 210
52U. CONFIDENTIALITY RESTRICTIONS FOR SECTION 2F 211
SECTION 2.G - DISTRIBUTOR/SUPPLIER TO CROWDED METER ROOM COORDINATOR RELATIONSHIPS 213
SCOPE OF SECTION 2G 214
52V. INTERPRETATION OF SECTION 2G 214
52W. PERMITTED WORKS 215
52X. PROVISION OF INFORMATION TO THE COMPANY AND ELECTRICITY SUPPLIER 216
SECTION 2.H - DISTRIBUTOR/SUPPLIER TO SIP PARTY RELATIONSHIPS 218
SCOPE OF SECTION 2H 219
52Y. INTERPRETATION OF SECTION 2H 219
52Z. PERMITTED WORKS 220
52AA. PROVISION OF INFORMATION TO THE COMPANY AND ELECTRICITY SUPPLIER 221
SECTION 3: GENERAL LEGAL PROVISIONS 223
53. LIMITATION OF LIABILITY 224
54. TERMINATION 227
55. FORCE MAJEURE 230
56. DEROGATIONS 231

57. FURTHER INFORMATION PROVISIONS 235
58. DISPUTES 237
59. DATA TRANSFER AND NOTICES 239
60. MISCELLANEOUS 241
SCHEDULE 1: COVER 246
1. PROVISION OF COVER 247
2. CALCULATION OF COVER 247
3. INCREASE OR DECREASE OF COVER REQUIREMENT 252
4. USE OF COVER FOLLOWING PAYMENT DEFAULT 254
5. UTILISATION OF FUNDS 254
6. USER'S RIGHT TO WITHDRAW FUNDS 255
7. NO SECURITY 255
8. DISPUTES 255
9. NOTICES 255
10. DEFINITIONS 255
SCHEDULE 2: 258
SCHEDULE 2A - MANDATORY TERMS FOR CONTRACTS 259
SCHEDULE 2B - NATIONAL TERMS OF CONNECTION 261
Section 1 262
Section 2 264
Section 3 266
1. DEFINITIONS & INTERPRETATION 266
2. APPLICATION OF THIS AGREEMENT 269
3. THE CUSTOMER'S RIGHT TO BE (AND REMAIN) CONNECTED 269
4. THE CUSTOMER'S RIGHT TO BE (AND REMAIN) ENERGISED 269
5. DE-ENERGISATION 271
6. DISCONNECTION 273
7. THE CUSTOMER'S INSTALLATION AND EQUIPMENT 273
8. THE COMPANY'S INSTALLATION AND EQUIPMENT 274
9. PLANT AND APPARATUS 274
10. PROPERTY RIGHTS & ACCOMODATION 275
11. RIGHTS OF ACCESS 276
12. LIMITATION OF CAPACITY 276
13. POWER FACTOR AND PHASE BALANCE 279
14. MODIFICATIONS 280
15. LIMITATION OF LIABILITY 281
16. DISTRIBUTION CODE 283
17. PAYMENTS 283
18. ASSIGNMENT AND SUB-CONTRACTING 283

19. EVENTS OF DEFAULT AND TERMINATION 283
20. FORCE MAJEURE 285
21. DISPUTES RESOLUTION 285
22. VARIATIONS 285
23. NOTICES 286
24. GENERAL 286
25. GOVERNING LAW AND JURISDICTION 287
Section 4 287
1. DEFINITIONS & INTERPRETATION 287
2. APPLICATION OF THIS AGREEMENT 291
3. THE CUSTOMER'S RIGHT TO BE (AND REMAIN) CONNECTED 291
4. THE CUSTOMER'S RIGHT TO BE (AND REMAIN) ENERGISED 291
5. DE-ENERGISATION 293
6. DISCONNECTION 295
7. INFORMATION 295
8. THE CUSTOMER'S INSTALLATION AND EQUIPMENT 298
9. THE COMPANY'S INSTALLATION AND EQUIPMENT 299
10. PLANT AND APPARATUS 299
11. PROPERTY RIGHTS & ACCOMMODATION 300
12. RIGHTS OF ACCESS 301
13. LIMITATION OF CAPACITY 301
14. POWER FACTOR AND PHASE BALANCE 302
15. MODIFICATIONS 303
16. LIMITATION OF LIABILITY 304
17. DISTRIBUTION CODE & UNMETERED SUPPLIES PROCEDURE 306
18. PAYMENTS 306
19. ASSIGNMENT AND SUB-CONTRACTING 306
20. EVENTS OF DEFAULT AND TERMINATION 307
21. FORCE MAJEURE 308
22. DISPUTES RESOLUTION 309
23. VARIATIONS 309
24. NOTICES 309
25. GENERAL 309
26. GOVERNING LAW AND JURISDICTION 310
SCHEDULE 2C - SUGGESTED BESPOKE CONNECTION AGREEMENT 312
BESPOKE CONNECTION AGREEMENT 313
APPENDIX 1 - GENERAL PARTICULARS OF THE CONNECTION 314
APPENDIX 2 - TECHNICAL CONDITIONS 315
SCHEDULE 2D - CURTAILABLE CONNECTIONS 316

1. SCOPE 317
2. SETTING THE CURTAILMENT LIMIT 317
3. MEASURING CURTAILMENT 321
4. CURTAILMENT REPORTING 323
5. EXCEEDING CURTAILMENT LIMITS 323
6. EXCEEDED CURTAILMENT PRICE 323
7. CURTAILABLE CONNECTION END DATES 325
8. CURTAILABLE CONNECTION AGREEMENT 326
9. DEFINITIONS 326
APPENDIX A: FLEXIBILITY MARKET PRICE STATEMENT 328
APPENDIX B: FORM OF CURTAILABLE CONNECTION AGREEMENT 328
ANNEX 1 - GENERAL PARTICULARS OF THE CURTAILABLE CONNECTION 329
ANNEX 2 - AMENDMENTS TO THE APPLICABLE NTC SECTION 330
1. DEFINITIONS & INTERPRETATION 330
5. DE-ENERGISATION 331
12. LIMITATION OF CAPACITY 332
ANNEX 3 - TECHNICAL CONDITIONS 334
SCHEDULE 3: INTEREST RECONCILIATION ACCOUNTS 336
SCHEDULE 4: BILLING AND PAYMENT DISPUTES 338
1. BILLING AND PAYMENT DISPUTES UNDER SECTION 2A 339
2. BILLING AND PAYMENT DISPUTES UNDER SECTION 2B 340
SCHEDULE 5: APPROVAL AND PERMISSION PROCEDURES 342
1. DEFINITIONS 343
2. PRINCIPLES 343
3. PROCEDURE FOR APPROVING CONTRACTORS 343
4. PROCEDURE FOR RECOGNISING COMPETENT PERSONS 344
5. PROCEDURE FOR RECOGNISING COMPETENT PERSONS 344
6. DISPUTES 344
SCHEDULE 6: METERING ACCURACY 346
1. METERING ACCURACY 347
2. DISPUTES IN RELATION TO METERING ACCURACY 347
SCHEDULE 7: DCUSA STANDING ISSUES GROUP 348
1. SCOPE 349
2. OBJECTIVES 349
3. MEMBERSHIP 349
4. CHAIR 349
5. REQUIREMENTS OF MEMBERS 349
6. MEETING FREQUENCY 350
7. SECRETARIAT 350

8. SUMMARY OF PROCESS 351
9. DECISION MAKING 351
10. REPORTING 351
11. FUNDING 351
12. OTHER MATTERS 351
SCHEDULE 8: DEMAND CONTROL 353
1. INTRODUCTION 354
2. DEFINITIONS 354
3. GENERAL OBLIGATIONS 355
3A. OBLIGATIONS SPECIFIC TO SMART METERING SYSTEMS 355
4. ADVISORY NOTICES 355
5. LOAD MANAGED AREAS 355
6. NOT USED 357
7. SECURITY RESTRICTION NOTICES 357
8. EMERGENCY SECURITY RESTRICTION NOTICES 358
9. CONFIDENTIALITY 360
10. APPEALS PROCEDURE 360
11. NOTICES 360
12. REVIEW PROCEDURE 360
13. ROTA LOAD BLOCK ALPHA IDENTIFIERS 361
APPENDIX A 362
SCHEDULE 9: ACCESSION AGREEMENT 363
SCHEDULE 9A: DCUSA PARTY NOVATION AGREEMENT 366
SCHEDULE 10: DCUSA LTD 369
1. BACKGROUND 370
2. ADDITIONAL DEFINITIONS AND INTERPRETATION 370
3. ESTABLISHMENT OF DCUSA LTD AND NEW PARTIES 371
4. DCUSA LTD'S BUSINESS 371
5. THE MANAGEMENT OF DCUSA LTD 372
6. RESERVED MATTERS 373
7. DCUSA LTD'S EXPENDITURE 373
8. ACCOUNTS 373
9. DISTRIBUTION POLICY 374
10. TRANSFER OF SHARES 374
11. DURATION AND TERMINATION 375
12. SHAREHOLDERS GENERALLY 375
13. INTELLECTUAL PROPERTY 375
14. CONFLICT WITH THE ARTICLES 375
15. FURTHER ASSURANCE 376

ANNEX 1 TO SCHEDULE 10 376
ANNEX 2 TO SCHEDULE 10 376
ANNEX 3 TO SCHEDULE 10 377
ANNEX 4 TO SCHEDULE 10 377
1. ADOPTION OF TABLE A 378
2. INTERPRETATION 378
3. SHARE CAPITAL 378
4. RESTRICTION ON SHARE OWNERSHIP 378
5. RIGHTS ATTACHING TO SHARES 379
6. UNISSUED SHARES 380
7. INITIAL AUTHORITY TO ISSUE RELEVANT SECURITIES 380
8. EXCLUSION OF RIGHTS TO OFFERS ON A PRE EMPTIVE BASIS 380
9. TRANSFER OF SHARES 380
10. PROCEEDINGS AT GENERAL MEETINGS 381
11. VOTES OF MEMBERS 381
12. DELIVERY OF PROXIES 381
13. ALTERNATE DIRECTORS 382
14. DELEGATION OF DIRECTORS' POWERS 382
15. NO AGE LIMIT OR SHARE QUALIFICATION 382
16. EXCLUSION OF ROTATION REQUIREMENTS AND OTHER PROVISIONS 382
17. DISQUALIFICATION AND REMOVAL OF DIRECTORS 382
18. DIRECTORS'GRATUITIES AND PENSIONS 382
19. NOTICE AND CONDUCT OF BOARD MEETINGS 382
20. QUORUM FOR BOARD MEETINGS 383
21. PARTICIPATION IN BOARD MEETINGS BY TELEHONE 383
22. RESOLUTION IN WRITING 383
23. DIRECTORS MAY VOTE WHEN INTERESTED 383
24. OFFICIAL SEAL 383
25. NOTICES 383
26. TIME OF SERVICE 384
SCHEDULE 11: PARTY DETAILS 385
SCHEDULE 12: NOT USED 387
SCHEDULE 13: BILATERAL CONNECTION AGREEMENT 388
CONTENTS 389
1. DEFINITIONS, INTERPRETATION AND CONSTRUCTION 390
2. COMMENCEMENT, DURATION AND CONNECTION 391
3. THE USER’S RIGHT TO BE AND TO REMAIN CONNECTED TO THE COMPANY’S DISTRIBUTION SYSTEM 391
4. THE CONNECTION POINTS, CONNECTION EQUIPMENT AND CONNECTION ASSETS 391

5. MAXIMUM CAPACITY 391
6. COMPLIANCE WITH SITE SPECIFIC CONDITIONS AND OPERATIONAL ARRANGEMENTS 392
7. TERM 392
8. VARIATIONS 393
9. GENERAL 393
SCHEDULE 14: WEBSITE REQUIREMENTS 396
SCHEDULE 15: NOT USED 399
SCHEDULE 16: COMMON DISTRIBUTION CHARGING METHODOLOGY 400
SCHEDULE 17: EHV CHARGING METHODOLOGY (FCP MODEL) 431
1. INTRODUCTION 432
2. FORWARD COST PRICING ANALYSIS 435
3. EDCM CHARGE COMPONENTS FOR CONNECTEES 438
4. CALCULATION OF EDCM CHARGE COMPONENTS 439
5. CHARGEABLE EXPORT CAPACITY FOR EXPORT CHARGES 439
6. APPLICATION OF FCP CHARGE 1 439
7. NO APPLICATION OF NEGATIVE CHARGES 440
8. DEMAND SIDE MANAGEMENT (DSM) AND GENERATION SIDE MANAGEMENT (GSM) 441
9. TRANSMISSION CONNECTION (EXIT) CHARGES FOR DEMAND 441
10. TRANSMISSION CONNECTION (EXIT) CREDITS FOR GENERATORS 442
11. REACTIVE POWER CHARGES 442
12. EXPORT CAPACITY CHARGES 442
13. ALLOCATION DRIVERS FOR OTHER CHARGE ELEMENTS IN THE EDCM 443
14. SOLE USE ASSETS 444
15. SITE-SPECIFIC SHARED NETWORK ASSETS 445
16. CALCULATION OF THE EDCM DEMAND REVENUE TARGET 450
17. FIXED CHARGES FOR IMPORT AND EXPORT 453
18. DEMAND SCALING 454
19. APPLICATION OF EDCM DEMAND FOR EDCM CONNECTEES 458
20. EXCEEDED CAPACITY CHARGES 459
21. APPLICATION OF EDCM IMPORT CHARGE COMPONENTS 460
22. CHARGES FOR NEW CONNECTEES 461
23. DNO TO DNO CHARGES 461
24. LDNO CHARGING 462
25. CALCULATION OF LDNO DISCOUNTS 462
26. PORTFOLIO EDCM TARIFFS FOR CONNECTEES IN THE EDCM 463
27. OFFSHORE NETWORKS CHARGING 465
28. DNO PARTY TO UNLICENSED NETWORKS 465
29. DERIVATION OF ‘NETWORK USE FACTORS’ 465
30. INCREMENTAL METHOD: 465

Annex 1 - Implementation Guide **468**
SCHEDULE 17 - EHV CHARGING METHODOLOGY (FCP MODEL) 469
1. SCOPE 469
2. POWER SYSTEMS ANALYSIS 469
3. DEFINITIONS 469
4. NETWORK MODELLING 472
5. NETWORK DEMAND DATA 476
6. NETWORK GROUPS 485
7. POWER FLOW ANALYSIS PROCESS 487
8. CALCULATION OF REINFORCEMENT COSTS 491
9. CALCULATION OF NETWORK GROUP INCREMENTAL CHARGES 492
ATTACHMENT 1 - CALCULATION OF NETWORK GROUP LOAD INCREMENTAL CHARGES – A SIMPLE EXAMPLE **495**
ATTACHMENT 3 - OUTPUT RESULTS **499**
Annex 2 - Derivation of FCP charging formulae **502**
SCHEDULE 18: EHV CHARGING METHODOLOGY (LRIC MODEL) **506**
1. INTRODUCTION 507
2. LONG RUN INCREMENTAL COST PRICING ANALYSIS 510
3. EDCM CHARGE COMPONENTS FOR CONNECTEES 517
4. CALCULATION OF EDCM CHARGE COMPONENTS 518
5. CHARGEABLE EXPORT CAPACITY FOR EXPORT CHARGES 518
6. APPLICATION OF LRIC CHARGE 1 518
7. NO APPLICATION OF NEGATIVE CHARGES 519
8. DEMAND SIDE MANAGEMENT (DSM) AND GENERATION SIDE MANAGEMENT (GSM) 519
9. TRANSMISSION CONNECTION (EXIT) CHARGES FOR DEMAND 519
10. TRANSMISSION CONNECTION (EXIT) CREDITS FOR GENERATORS 520
11. REACTIVE POWER CHARGES 520
12. EXPORT CAPACITY CHARGES 521
13. ALLOCATION DRIVERS FOR OTHER CHARGE ELEMENTS IN THE EDCM 522
14. SOLE USE ASSETS 522
15. SITE-SPECIFIC SHARED NETWORK ASSETS 523
16. CALCULATION OF THE EDCM DEMAND REVENUE TARGET 527
17. FIXED CHARGES FOR IMPORT AND EXPORT 531
18. DEMAND SCALING 532
19. APPLICATION OF EDCM CHARGES FOR EDCM CONNECTEES 536
20. EXCEEDED CAPACITY CHARGES 537
21. APPLICATION OF EDCM IMPORT CHARGE COMPONENTS 538
22. CHARGES FOR NEW CONNECTEES 539
23. DNO TO DNO CHARGES 539

24. LDNO CHARGING 540
25. CALCULATION OF LDNO DISCOUNTS 540
26. PORTFOLIO EDCM TARIFFS FOR CONNECTEES IN THE EDCM 541
27. OFFSHORE NETWORKS CHARGING 542
28. DNO PARTY TO UNLICENSED NETWORKS 543
29. DERIVATION OF 'NETWORK USE FACTORS' 543
30. INCREMENTAL METHOD 543
ANNEX 1 - IMPLEMENTATION GUIDE 546
SCHEDULE 18 - EHV CHARGING METHODOLOGY (LRIC MODEL) 547
1. SCOPE 547
2. POWER SYSTEMS ANALYSIS 547
3. DEFINITIONS 547
4. NETWORK MODELLING 551
5. NETWORK DEMAND DATA 555
6. POWER FLOW ANALYSIS PROCESS 561
7. CALCULATION OF NODAL INCREMENTAL COSTS 571
8. OUTPUT RESULTS 572
ATTACHMENT 1 - CALCULATION OF BRANCH INCREMENTAL COST 580
ATTACHMENT 2 - CALCULATION OF PEAK AND OFF-PEAK CHARGES – A SIMPLE EXAMPLE 582
ATTACHMENT 3 - OUTPUT RESULTS 593
ANNEX 2 – DERIVATION OF THE LRIC CHARGING FORMULA 594
SCHEDULE 19: PORTFOLIO BILLING 598
1. APPLICATION OF THIS SCHEDULE 599
2. AGGREGATED DEMAND DATA 599
3. SITE SPECIFIC DATA 599
4. MPAN REPORT 601
5. AUDIT 601
6. LINE LOSS FACTOR CLASS OR DUOS TARIFF ID 601
7. NOTICES 602
APPENDIX A 602
SCHEDULE 20: PRODUCTION OF THE COST INFORMATION REVIEW PACK 603
1. INTRODUCTION 604
2. COST INFORMATION REVIEW PACK 604
3. GLOSSARY 605
APPENDIX A – TABLE 1 605
APPENDIX B – TABLE 2 609
SCHEDULE 21: PORTFOLIO BILLING FOR NESTED NETWORKS 611
1. APPLICATION OF THIS SCHEDULE 612
2. AGGREGATED DATA 612

3. SITE SPECIFIC DATA 613
4. MPAN REPORT 613
5. AUDIT 613
6. LINE LOSS FACTOR CLASS OR DUOS TARIFF ID 614
7. NOTICES 615
SCHEDULE 22: COMMON CONNECTION CHARGING METHODOLOGY 616
Section 1 – Common Connection Charging Methodology 617
1. 617
Worked Examples Illustrating the Application of the Connection Charging Methodology 632
Example 1: A new connection at LV 635
Example 2: A new connection at HV 636
Example 3: A new connection on a domestic housing development with interconnection requested by Customer 637
Example 4: A new connection with interconnection requested by us 639
Example 5: A new connection where the Minimum Scheme is a new substation teed onto the existing HV network. 640
Example 6: A new connection where the Minimum Scheme is a new substation looped into existing HV network. 642
Example 7: A new connection where the Minimum Scheme is as for Example 5 but the Customer requests an enhanced connection arrangement where the substation is looped into existing HV network. 643
Example 8: A new connection where the Minimum Scheme is as for Example 5 but we request an Enhanced Scheme where the substation is looped into the existing HV network. 645
Example 9: An additional load application requiring a new connection from the HV network and Reinforcement. 646
Example 10: A new connection that results in a Point of Connection further away than the nearest network. 648
Example 11: A new Generation Connection with capacity triggered Reinforcement. 650
Example 12: A new Generation Connection with Fault Level-Triggered Reinforcement. 651
Example 13: A new Generation Connection that requires Reinforcement involving both Security and Fault Level CAFs. 653
Example 14: A new Generation Connection with Reinforcement at a voltage above that of the Point of Connection. 654
Example 15: A new Generation Connection where switchgear extension is not possible and switchgear replacement is needed. 656
Example 16: A new Storage Connection that triggers Reinforcement. 657
Example 17: A new connection that is connected by Reinforced assets 659
Example 18: A new connection of a development 661
Example 19: A new connection with remote network Reinforcement 663
Example 20: A new connection with load transfer 666
Example 21: A new Generation Connection with an Enhanced Scheme at the DNO's request. 668
Example 22: A new Generation Connection on a meshed HV distribution system requiring Reinforcement. 670
Example 23: A non-secure Generation Connection with non-secure Reinforcement. 672
Example 24: A new non-secure Generation Connection with secure Reinforcement. 674

Example 25: A new Generation Connection with voltage rise triggered Reinforcement. 676
Example 26: A new Generation Connection with voltage rise triggered Reinforcement. 678
Example 27: A new Generation Connection with Fault Level Triggered Reinforcement and transmission works. 680
Example 28: A new Generation Connection with Fault Level Triggered Reinforcement and transmission works. 682
Example 29: A new Demand Connection that has Reinforcement above the High-Cost Project Threshold. 684
Example 30: A new Generation Connection that has Reinforcement above the High-Cost Project Threshold. 686
Example 31: The Customer requirements for supply characteristics are greater than the Minimum Scheme. 688
Example 32: A new Generation Connection that has Reinforcement costs above the High-Cost Project Threshold at the Voltage Level of the POC (single asset to be cost apportioned). 690
Example 33: A new Generation Connection that has Reinforcement costs above the High-Cost Project Threshold at the Voltage Level of the POC (multiple assets to be cost apportioned). 692
Section 2 – Glossary of Terms 695
SCHEDULE 23: NOT USED 698
SCHEDULE 24: SERVICE LEVELS FOR RESOLVING NETWORK OPERATIONAL ISSUES AND ASSOCIATED REPORTING REQUIREMENTS 699
PART 1 - PRESCRIBED PERIODS 700
1. PRESCRIBED PERIODS 700
PART 2 - ASSET CONDITION CODES 700
2. ASSET CONDITION CODES 700
PART 3 - COMPANY REPORTING REQUIREMENTS 700
3. COMPANY REPORTING REQUIREMENTS 700
PART 4 - USER SMART METER INSTALLATION FORECAST REPORTING 702
4. USER SMART METER INSTALLATION FORECAST REPORTING 702
SCHEDULE 25: DISTRIBUTOR METER MOVES DURING SERVICE ALTERATIONS 703
1. DISTRIBUTOR METER MOVES DURING SERVICE ALTERATIONS SCOPE DOCUMENT 704
SCHEDULE 26: NOT USED 705
SCHEDULE 27: NOT USED 706
SCHEDULE 28: DISTRIBUTION CHARGING METHODOLOGIES DEVELOPMENT GROUP 707
1. SCOPE 708
2. OBJECTIVES 708
3. MEMBERSHIP 708
4. CHAIR 709
5. REQUIREMENTS OF MEMBERS 709
6. MEETING FREQUENCY 709
7. SECRETARIAT 709
8. SUMMARY OF PROCESS 710
9. DECISION MAKING 710
10. REPORTING 710
11. FUNDING 711
12. OTHER MATTERS 711

SCHEDULE 29: CALCULATION OF DISCOUNT PERCENTAGES FOR THE PURPOSE OF DETERMINING CERTAIN LDNO USE OF SYSTEM CHARGES UNDER SCHEDULES 16, 17 AND 18 ..... **712**

IMPLEMENTATION DATE 713

SCHEDULE 30: NOT USED **725**

SCHEDULE 31: EMBEDDED CAPACITY REGISTER **726**

1. INTRODUCTION 727

2. CONTENT OF THE EMBEDDED CAPACITY REGISTER 727

3. AMENDMENTS TO THE EMBEDDED CAPACITY REGISTER 727

SCHEDULE 32: RESIDUAL CHARGING BANDS **729**

1. SCOPE 730

2. INITIAL DETERMINATION OF CHARGING BANDS 731

3. REVIEW OF CHARGING BANDS 732

4. ALLOCATION OF CUSTOMERS TO CHARGING BANDS BY DNO/IDNO PARTIES 732

5. TRANSITIONAL PERIOD AS A RESULT OF A RE-CLASSIFICATION OF A SINGLE SITE 733

5A. RE-CLASSIFICATION OF A SINGLE SITE 734

6. EXCEPTIONAL CIRCUMSTANCES AND ANNUAL ALLOCATION REVIEW RESULTING IN RE-ALLOCATION TO A DIFFERENT BAND WITHIN A PRICE CONTROL PERIOD 734

7. DISPUTES 736

8. DEFINITIONS 738

SCHEDULE 33: DISCONNECTIONS **741**

1. INTRODUCTION 742

2. CONTEXT 743

3. PRINCIPLES 743

4. SINGLE-SITE PHYSICAL DISCONNECTION 744

5. MULTI-SITE PHYSICAL DISCONNECTIONS 748

6. LOGICAL DISCONNECTIONS 751

7. LOGICAL DISCONNECTIONS - BULK UPDATES 752

COVER PAGE AND INTRODUCTION

DATED 5th October 2006

THE PARTIES (1)

and

DCUSA LIMITED (2)

DISTRIBUTION CONNECTION AND USE OF SYSTEM AGREEMENT

Wragge&Co

Wragge & Co LLP is a Limited Liability Partnership

Birmingham London Brussels

Tel +44 (0)870 903 1000 Fax +44 (0)870 904 1099 mail@wragge.com www.wragge.com

NOTE

The Gas and Electricity Markets Authority is not a party to this Agreement. References in this Agreement to duties and functions of the Authority have been approved by it, but are merely declaratory as to its role and do not entail any contractual duties being owed by it to, or contractual rights being owed to it by, other Parties.

INTRODUCTION

A The Parties comprise electricity distributors, electricity suppliers, certain gas suppliers, CVA Registrants, certain metering companies, the Crowded Meter Room Coordinator, and the OTSO Party.

B The DNO Parties and IDNO Parties are required, by their licences, to be party to, comply with, and maintain this Agreement.

C The Supplier Parties are required, by their licences, to be party to, and comply with, this Agreement.

D The CVA Registrants are under certain obligations, under other industry agreements, regarding distribution use of system arrangements, and have agreed to accede to this Agreement in order to meet those obligations.

E The OTSO Party wishes to connect to and use the systems of the DNO Parties and the IDNO Parties, and has agreed to accede to this Agreement in order to do so.

F The Gas Supplier Parties have agreed to accede to this Agreement in order to allow them to install, operate, inspect, maintain, repair, renew, reposition, replace and remove Smart Metering Comms Hub Devices.

G The Crowded Meter Room Coordinator has agreed to accede to this Agreement in order to allow it to undertake Crowded Meter Room Works.

H The SIP Parties have agreed to accede to this Agreement in order to allow them to undertake Safe Isolation Works.

I DCUSA Ltd is a company established under this Agreement to facilitate the operation of this Agreement.

J The Parties and DCUSA Ltd have agreed to give effect to, and to be bound by, this Agreement in accordance with an Accession Agreement.

SECTION 1: GOVERNANCE AND CHANGE CONTROL

SECTION 1.A - PRELIMINARY

1. DEFINITIONS AND INTERPRETATION

Definitions.

1.1 In this Agreement, except where the context otherwise requires, the expressions in the left hand column below shall have the meanings given to them in the right hand column below:

Accession Agreement	means the agreement by which DCUSA Ltd and each Party agreed to be bound by this Agreement.
Act	means the Electricity Act 1989.
Advanced Data Service	has the meaning given to that term in the Balancing and Settlement Code.
Affected Party	has the meaning given to that term in Clause 55.1.
Affiliate	means, in relation to any person, any holding company of that person, any subsidiary of that person or any subsidiary of a holding company of that person, in each case within the meaning of Section 1159 of the Companies Act 2006.
Agency for the Cooperation of Energy Regulators	means the agency of that name established under Regulation 2009/713/EC of the European Parliament and of the Council of 13 July 2009 as construed as reference to and read in accordance with the correlation table in Annex II of Regulation 2019/942/EU establishing an European Union Agency for the Cooperation of Energy Regulators (recast), and as it had effect immediately before IP Completion Day.
Agreement	means this Distribution Connection and Use of System Agreement (including its Schedules and Annexes), and is to be construed as including the Accession Agreements.
Alternate	means an individual selected in accordance with Clause 6 to act as a Panel Member in certain circumstances (as further described in Clause 6).
Annual Iteration Process	has the meaning given to that term in the charge restriction conditions in the Distribution Licences.
Applicant	has the meaning given to that term in Clause 4.1.
Application Form	has the meaning given to that term in Clause 4.3.
Approved Budget	has the meaning given to that term in Clause 8.5.
Approved Contractor	has the meaning given to that term in Schedule 5.
Assessment Process	has the meaning given to that term in Clause 11.1.
Authority Change Proposal	means modifications proposed to this Agreement: a. where the Authority reasonably considers the modifications are necessary to comply with or implement the EU Internal Market Regulation and/or any relevant legally binding decisions of the European Commission and/or the Agency for the Co-operation of Energy Regulators; and/or b. in respect of a Significant Code Review (including where the Authority has issued a statement in accordance with Condition 22.9E(bb) of the Distribution Licences and/or a “back-stop” direction in accordance with Condition 22.9ED of the Distribution Licences).
Authority-Led Change Proposal	means an Authority Change Proposal in respect of which the Authority considers that there has been sufficient consultation outside of the processes set out in this Agreement such that it is unnecessary to submit the proposal to the Definition Procedure.
Authority	means the Gas and Electricity Markets Authority as established under Section 1 of the Utilities Act 2000.
Authority Guidance on Code Modification Prioritisation	means the guidance published by the Authority from time to time on code modification prioritisation.

Balancing and Settlement Code or BSC	means the Balancing and Settlement Code, including all Code Subsidiary Documents (as therein defined), established pursuant to the Electricity System Operator Licence.
Basic Vote	has the meaning given to that term in Clause 12.10.
Bespoke Connection Terms	means any terms imposed or agreed by the DNO/IDNO Party in respect of the connection of a Connected Installation to the Distribution System which differ from the terms set out in Schedule 2B (National Terms of Connection).
Bilateral Connection Agreement	means an agreement entered into pursuant to Clause 38.1 which, unless agreed otherwise by the Company and the User, is substantially in the form set out in Schedule 13, and which together with this Agreement shall: a. govern the terms under which a User's System shall be entitled to be Connected and remain Connected to the Company's Distribution System at each relevant Connection Point; and b. detail the ownership, operational and maintenance responsibilities and procedures in respect of the Connection Equipment at each relevant Connection Point.
Breaching Party	has the meaning given to that term in Clause 54.1.

BSC Party	means a Party that has acceded to the BSC (and is therefore bound by the terms of the BSC);
BSC Party Agent	has the meaning given to the term 'Party Agent' in the BSC.
BSCCo	has the meaning given to that term in the BSC.
BSCP	means a BSC Procedure as defined in the BSC.

Category A Situation	means a situation in which the Company's Electric Lines or Electrical Plant does (or is likely to) pose a danger, including danger of death of or injury to persons and/or danger of damage to or destruction of property.
Category B Situation	means a situation in which the condition of the Company's Electric Lines or Electrical Plant prevents metering work from being carried out or prevents a meter from being exchanged but where the situation is not a Category A Situation.
Category C Situation	means an issue with the Company's Electric Lines or Electrical Plant that is neither a Category A Situation nor a Category B Situation.
CCCM	means the common connection charging methodology set out in Schedule 22 (Common Connection Charging Methodology). As described in that Schedule, the CCCM only comprises part of the connection charging methodology that each DNO Party is obliged to have in force under its Distribution Licence.
CDCM	means the common distribution charging methodology for determining certain of the Use of System Charges of the DNO Parties that are to be recovered pursuant to Section 2A, Section 2B, and the Relevant Charging Statements, as set out in Schedule 16 (Common Distribution Charging Methodology).
CDCA	means the Central Data Collection Agent as defined in the Balancing and Settlement Code.
Central Switching Service or CSS	has the meaning given to that term in the REC.
Change Proposal	has the meaning given to that term in Clause 10.1.
Change Register	has the meaning given to that term in Clause 11.25.
Change Report	has the meaning given to that term in Clause 11.19.
Charges	means, in respect of Section 2A, the Use of System Charges and the Other Charges, and, in respect of Section 2B, those charges referred to in Clause 43.2 (which in the case of Clause 43.2, for the avoidance of doubt, includes both Use of System Charges and Transactional Charges).
Charging Methodologies	means each of the CDCM, the EDCM and the CCCM.
Charging Objectives	has the meaning given to that term in Clause 3.2.
Citizens Advice	means the National Association of Citizens Advice Bureaux (a company incorporated in England and Wales with company number 1436945).
Citizens Advice Scotland	means the Scottish Association of Citizens Advice Bureaux (a company incorporated in Scotland with company number SC089892).
CMRS	means the Central Meter Registration Service as defined in the Balancing and Settlement Code.
Code Administration Code of Practice	means the code of that name approved by the Authority as amended and/or re-published with the Authority's approval from time to time.
Company	has; a. in respect of Section 2A, the meaning given to that term in Clause 15.1; b. in respect of Section 2B, the meaning given to that term in Clause 36.1; c. in respect of Section 2C, the meaning given to that term in Clause 52A.1; d. in respect of Section 2D, the meaning given to that term in Clause 52G.4. e. in respect of Section 2E, the meaning given to that term in Clause 52M.1; f. in respect of Section 2F, the meaning given to that term in Clause 52Q.4; g. in respect of Section 2G, the meaning given to that term in Clause 52V.1; and h. in respect of Section 2H, the meaning given to that term in Clause 52Y.1;
Competent Authority	means the Secretary of State, the Authority, and any local or national agency, authority, department, inspectorate, minister, ministry, official or public or statutory person (whether autonomous or not) of the government of the United Kingdom or of the European Union insofar as it is acting within the limits of its proper authority.
Competent Person	has the meaning given to that term in Schedule 5.
Connect	means, in respect of Section 2B, to provide Connection Assets in such a way that, subject to Energisation and the terms of this Agreement and the relevant Bilateral Connection Agreement, electricity may flow between the Distribution System of the Company and the System of the User across the Connection Point. or series of related Connection Points (such related Connection Points to be identified in the relevant Bilateral Connection Agreement), and cognate expressions shall be construed accordingly.
Connection and Use of System Code or CUSC	means the Connection and Use of System Code (and the CUSC Framework Agreement) established pursuant to the Electricity System Operator Licence.

Connectee	means, in respect of: a. Section 2A, 2C, 2D, 2E or 2F and a Customer Installation, the relevant Customer; b. Section 2A and a Generator Installation, the relevant Generator; c. Section 2A and a User Installation, the User; and d. Section 2B, a person whose premises are connected to the Company's Distribution System or a person whose premises are connected to the User's System (as determined in accordance with Clause 36.4).
Connected Installation	means a Customer Installation, a Generator Installation or a User Installation (as the case may be).
Connection Agreement	means an agreement between a Company and a Connectee which provides that that Connectee has the right for its Connected Installation to be and remain directly or indirectly connected to that Company's Distribution System.
Connection Assets	means those assets, including the Company's Connection Equipment, that are operated and maintained by the Company, and which are provided for the sole use of Connecting the User's System to the Company's Distribution System.
Connection Equipment	means any Electrical Plant and/or Electric Line which is provided and installed at the Connection Point for the purposes of providing a connection between the Company's Distribution System and the User's System, as specified in the relevant Bilateral Connection Agreement and (where appropriate) illustrated on the diagram annexed thereto.
Connection Point	means a point at which the Distribution System of the Company Connects to the System of the User via the Connection Equipment, such point being specified in the relevant Bilateral Connection Agreement.
Consequential Change	means either (as the context requires) a Change Proposal under this Agreement or a variation to another Energy Code, which (in either case) the Cross Code Steering Group has designated as such, and which the Cross Code Steering Group considers would be necessary to give full and timely effect to a variation under a different Energy Code (if that variation was approved).
Consolidated Theft Processes	means the processes and procedures governed by this Agreement that are, on Energy Theft Consolidation, to become subject to the Retail Energy Code, as set out in the Theft Arrangements Schedule to the Retail Energy Code.
Consumer Body	means (as the context requires) either or both of Citizens Advice and/or Citizens Advice Scotland
Contract	means a Supply Contract or a Power Purchase Contract.
Contract Manager	has the meaning given to that term in Clause 60.5.
Cost Contribution	has the meaning given to that term in Clause 8.9.
Cost Information Review Pack or **CIRP**	has the meaning given to that term in Paragraph 2.1 of Schedule 20.
Cover	has the meaning given to that term in Schedule 1.
CRA	means the Central Registration Agent as defined in the Balancing and Settlement Code.
Cross Code Steering Group	means the group of that name described in the Change Management Schedule to the Retail Energy Code.
Crowded Meter Room Coordinator	means Alt HAN Company Limited (a company incorporated in England and Wales with company number 10002859).
Crowded Meter Room Works	means works which are reasonably required to maximise the available space within a meter room or meter cupboard, in order to enable the installation of Relevant Alt HAN Equipment and/or Smart Metering Systems, including: a. De-energising an Entry/Exit Point; b. repositioning meters, cabling, local points of isolation and customer isolation switches; c. removing and disposing of inhibitive trunking and cable trays; d. removing and disposing of redundant equipment; and/or e. Re-energising an Entry/Exit Point that was previously De-energised by or on behalf of the Crowded Meter Room Coordinator.
CSS Provider	has the meaning given to that term in the REC.
CT	indicates metering which uses current transformers to induce a reference current which then passes through the meter (as compared to non-CT or whole current metering, where the full electrical current passes through the meter).
CUSC Framework Agreement	means the agreement of that name, in the form approved by the Secretary of State, by which the CUSC is made contractually binding between the parties to it.
Customer	means: a. in respect of Section 2A, a person to whom a User proposes to supply, or for the time being supplies, electricity through an Exit Point, or from whom a User, or any Relevant Exempt Supplier, is entitled to recover charges, compensation or an account of profits in respect of electricity supplied through an Exit Point; b. in respect of Section 2B, any owner or occupier of premises in Great Britain who is supplied or requires to be supplied with electricity, and includes an electricity supplier when acting on behalf of such a person; and c. in respect of Section 2C, 2D, 2E, 2F, 2G or 2H, any owner or occupier of premises in Great Britain who is supplied or requires to be supplied with electricity.

Customer Installation	means any structures, equipment, lines, appliances or devices used or to be used by a Customer and connected or to be connected directly or indirectly to the Distribution System.
CVA Metering System	has the meaning given to that term in the Balancing and Settlement Code.
CVA Registrant	means a Party that: a. is a BSC Party; b. is registered in respect of a CVA Metering System that is connected directly to a Distribution System; and c. does not hold a Distribution Licence, and, for the avoidance of doubt, a Party may be both a CVA Registrant and a Supplier Party.

Daily Statement	means a statement for each Settlement date and Settlement Code by Distributor ID, GSP Group ID and Supplier ID, based on the Supercustomer DUoS Report and providing the data items set out in either: a. for non-MHHS Metering Points, the D0242 data flow / market message; or b. for MHHS Metering Points, the REP-901 data flow / market message (as, in either case, amended from time to time in accordance with the provisions of the Energy Market Data Specification).
Daily Tariff Number of MSIDs	has the meaning given to that term in the REP-901 data flow / market message (as amended from time to time in accordance with the provisions of the Energy Market Data Specification).
Daily Uncorrected Volume for Charge Band	has the meaning given to that term in the REP-901 data flow / market message (as amended from time to time in accordance with the provisions of the Energy Market Data Specification).
Data Aggregator	has the meaning given to that term in the Balancing and Settlement Code.
Data Collector	has the meaning given to that term in the Balancing and Settlement Code.
Data Integration Platform (DIP)	has the meaning given to that term in the DIP Supplement of the Balancing and Settlement Code.
Data Item	means the most granular level of data defining a specific attribute in respect of a data type, the permissible values for which are defined and controlled in the Energy Market Data Specification.
Data Protection Legislation	means the Data Protection Act 1998; the EU Regulation 2016/679 on the protection of natural persons with regard to the processing of personal data and on the free movement of such data, which is known as the General Data Protection Regulation, and any other applicable legislation governing the processing of personal data as adopted by the UK Government.
Data Service	means either an Advanced Data Service, a Smart Data Service or an Unmetered Data Service.
Data Services	has the meaning given to that term in the Distribution Licences.
Data Transfer Network	means the electronic network provided as part of the Data Transfer Service.
Data Transfer Service	has the meaning given to that term in the Distribution Licence.
Data Transfer Service Agreement	means the agreement for the provision of the Data Transfer Service dated 30 July 1997.
DCMDG Issue Form	means a form, established by the Panel and published on the Website, to be used by any person wishing to submit an issue relating to the operation of the Use of System Charging Methodologies to the DCMDG.
DCUSA Issue Form or DIF	means a form, established by the Panel and published on the Website, to be used by any person identified in Clause 10.2 wishing to submit an issue relating to the operation of this Agreement to the DCUSA Standing Issues Group.
DCUSA Late Payment Notice	has the meaning given to that term in Clause 8.11A.
DCUSA Ltd	means DCUSA Limited, a company incorporated in England and Wales with registered number 5812381.
DCUSA Message	means Market Messages, Data Items, scenario variants and other meta data listed in the Energy Market Data Specification for which DCUSA is identified as the Meta Data Owner.
DCUSA Objectives	means, in respect of the Charging Methodologies only, the Charging Objectives and, in all other cases, the General Objectives.
DCUSA Payment Default	has the meaning given to that term in Clause 8.11B.
DCUSA Standing Issues Group or SIG	means a Working Group representing a cross-section of industry participants brought together to consider solutions to operational issues (including those submitted by way of DCUSA Issue Forms).

De-energise	means: a. in respect of Section 2A, 2C, 2D, 2E, 2F, 2G or 2H, deliberately to prevent the flow of electricity until Re-energised or Disconnected: i. in the case of an Exit Point, from the Distribution System through the relevant Exit Point (or, in the case of an Unmetered Supply, any one or more of the relevant Exit Points) to; and/or ii. in the case of an Entry Point, via the Distribution System through the relevant Entry Point (or, in the case of an Unmetered Supply, any one or more of the relevant Entry Points) from a Connected Installation, for any purpose other than a System Outage on the Company's Distribution System (and cognate expressions shall be construed accordingly); and b. in respect of Section 2B, deliberately to prevent the flow of electricity through a Connection Point for any purpose other than a System Outage on the Company's Unmetered Supply until Re-energised or Disconnected (and cognate expressions shall be construed accordingly).
De-energisation Works	means: a. the movement of any switch, b. the removal of any fuse or meter; or c. the taking of any other physical works, to De-energise a Connection Point, Metering Point or Metering System.
Definition Procedure	has the meaning given to that term in Clause 11.14.
Default Interest Rate	means 8% above the base lending rate of Barclays Bank PLC.
DIP Supplement	means the document forming part of the Balancing and Settlement Code that establishes the rules for the governance and operation of the DIP.
Directive	includes any present or future directive, requirement, instruction, direction or rule of any Competent Authority (but only, if not having the force of law, if compliance with the Directive is in accordance with the general practice of persons to whom the Directive is addressed) and includes any modification, extension or replacement thereof then in force.
Disconnect	means to permanently disconnect a Connection Point, Metering Point or Metering System in accordance with Section 17 of the Act (and cognate expressions shall be construed accordingly).
Distribution Business	has, in respect of each DNO Party or IDNO Party, the meaning given to that term in that Party's Distribution Licence.
Distribution Charging Methodologies Development Group or DCMDG	means a Working Group representing a cross-section of industry participants brought together to consider solutions to issues arising out of the Use of System Charging Methodologies (including those submitted by way of DCMDG Issue Forms).
Distribution Code	has, in respect of each DNO Party or IDNO Party, the meaning given to that term in that Party's Distribution Licence.
Distribution Licence	means a licence granted, or treated as granted, pursuant to Section 6(1)(c) of the Act.
Distribution Network	means, collectively, the Distribution Systems of the DNO Parties and the IDNO Parties.
Distribution Services Area	means, in respect of each DNO Party, the area specified in respect of that Party pursuant to its Distribution Licence.
Distribution System	has the meaning given to that term in the Distribution Licence, and means: a. in respect of each DNO Party or IDNO Party, that Party's Distribution System; and b. in Section 2A (unless the context otherwise requires), the Company's Distribution System.
Distributor Meter Moves During Service Alterations Scope Document	means the document of that name as from time to time published on the Website, which is to be established and from time to time updated by the Panel, as further described in Schedule 25 (Distributor Meter Moves During Service Alterations).
Domestic Premises	means premises at which a supply of electricity is taken wholly or mainly for domestic purposes.
Draft Budget	has the meaning given to that term in Clause 8.2.
DNO Party	means a Party that holds a Distribution Licence in which Section B of the standard distribution licence conditions has effect, whether or not that Party is also engaged in the supply or generation of electricity.
DNO/IDNO Party	means a DNO Party or an IDNO Party (and DNO/IDNO Parties shall mean the DNO Parties and the IDNO Parties collectively).
DNO/IDNO/OTSO Party	means a DNO Party, an IDNO Party or the OTSO Party (and DNO/IDNO/OTSO Parties shall mean the DNO Parties, the IDNO Parties and the OTSO Party collectively).
DUoS Tariff ID	has the meaning given to that term in Industry Standing Data.

EDCM	means the EHV distribution charging methodology for determining certain of the Use of System Charges of the DNO Parties that are to be recovered pursuant to Section 2A, Section 2B, and the Relevant Charging Statement, as set out: a. in Schedule 17 (EHV Distribution Charging Methodology A) in respect of those DNO Parties that are named in that Schedule; and b. in Schedule 18 (EHV Distribution Charging Methodology B) in respect of those DNO Parties that are named in that Schedule.
EDNO	means, in respect of the Company where it is a DNO Party, any IDNO Party (or DNO Party acting outside of that DNO Party's Distribution Services Area) which has a Distribution System embedded within one of the Company's GSP Groups (as defined in the BSC).
EDNO UMS Charges	has the meaning given to that expression in Clause 46A.
EHV	means extra-high voltage, being a nominal voltage of more than 22,000 volts.
Electric Line	means any line which is used for carrying electricity to or from a Connection Point, Entry Point or Exit Point and includes, unless the context otherwise requires: a. any support for such line, that is to say, any structure, pole or other thing in, on, by or from which any such line is or may be supported, carried or suspended; b. any apparatus connected to such line for the purpose of carrying electricity; and c. any wire, cable, tube, pipe or other similar thing (including its casing or coating) which surrounds or supports, or is surrounded or supported by, or is installed in close proximity to, or is supported, carried or suspended in association with, any such line.
Electrical Plant	means any plant, equipment, apparatus or appliance used for or for purposes connected with the distribution of electricity (including any metering equipment) other than an Electric Line.
Electricity Retail Data Service	has the meaning given to that term in the REC.
Electricity Supplier	a. in respect of Section 2C and any Smart Metering Comms Hub Device, means the Supplier Party that is Registered from time to time for the Metering Point associated with the Premises to which that Smart Metering Comms Hub Device relates; b. in respect of Section 2D, has the meaning given to that expression in Clause 52G.1; c. in respect of Section 2F, has the meaning given to that expression in Clause 52Q.1; d. in respect of Section 2G, has the meaning given to that expression in Clause 52V.1; or e. in respect of Section 2H, has the meaning given to that expression in Clause 52Y.1.
Electricity System Operator Licence	means a licence granted or treated as granted under Section 6(1)(da) of the Act.
Embedded Capacity Register	means, for each DNO/IDNO Party, a register of site-specific data items for certain sites, as described in Clause 35C (Provision of an Embedded Capacity Register)
Enabling Agreement	means an agreement for the provision of Exempt Supplier.
Energise	means: a. in respect of Section 2A, deliberately to allow the flow of electricity: i. in the case of an Exit Point, from the Distribution System through the relevant Exit Point (or, in the case of an Unmetered Supply, any one or more of the relevant Exit Point) to; and/or ii. in the case of an Entry Point, via the Distribution System through the relevant Entry Point (or, in the case of an Unmetered Supply, one or more of the relevant Entry Points) from, a Connected Installation, where such a flow of electricity has never previously existed (and cognate expressions shall be construed accordingly); b. in respect of Section 2B, deliberately to allow the flow of electricity through a Connection Point where such a flow of electricity has never previously existed (and cognate expressions shall be construed accordingly).
Energisation Works	means the movement of any switch or the addition of any fuse or meter to Energise a Connection Point, Metering Point or Metering System.
Energy Codes	means a code or agreement maintained pursuant to one or more licences granted under the Electricity Act 1989 or the Gas Act 1986.

Energy Market Data Specification	means the Data Specification which forms part of the REC.
Energy Theft Consolidation	has the meaning given in the Retail Energy Code.
Energy Theft Tip-Off Service	means a service by which members of the public can report instances (or potential instances) of energy theft (including Theft of Electricity), which service is, from Energy Theft Consolidation, being moved from this Agreement to the Retail Energy Code.
Entry Point	has the meaning given to that term in the Distribution Licences.
Equivalent Meter	means an equivalent half-hourly meter as defined by the Unmetered Supplies Procedure.
ESPR	means the Electricity (Standards of Performance) Regulations 2015 (SI 2015/699).
EU Internal Market Regulation	means Regulation (EU) 2019/943 of the European Parliament and of the Council of 5 June 2019 on the internal market for electricity (recast) as it has effect immediately before IP Completion Day as read with the modifications set out in the SI 2020/1006.
Event of Default	has the meaning given to that term in Clause 54.1.
Exempt Supplier	means a person who is authorised to supply electricity by an exemption granted under Section 5 of the Act.
Exempt Supply Services	means services, provided by a Supplier Party to an Exempt Supplier, pursuant to which the Supplier Party becomes Registered in respect of one or more Metering Points and Metering Systems that relate to premises supplied, or required to be supplied, by the Exempt Supplier.
Exit Point	has the meaning given to that term in the Distribution Licences.
Extra-Settlement Determination	has the meaning given to that term in the Balancing and Settlement Code.

Final Demand Site	means: (a) Domestic Premises; or (b) a Single Site (as defined in Schedule 32) at which there is Final Demand, as determined in accordance with Paragraphs 1.10 and 5 of Schedule 32.
Financial Year	means the financial year adopted by DCUSA Ltd from time to time and established, at the date of this Agreement, as 1 April to 31 March.
Force Majeure	means, in respect of any person, any event or circumstance which is beyond the reasonable control of that person and which results in or causes the failure of that person to perform any of its obligations under this Agreement, including act of God, strike, lockout or other industrial disturbance, act of the public enemy, war declared or undeclared, threat of war, terrorist act, blockade, revolution, riot, insurrection, civil commotion, public demonstration, sabotage, act of vandalism, lightning, fire, storm, flood, earthquake, accumulation of snow or ice, explosion, fault or failure of plant or machinery which (in each case) could not have been prevented by Good Industry Practice; and any governmental restraint, Act of Parliament, other legislation, bylaw and Directive (not being any order, regulation or direction under Section 32, 34 or 35 of the Act), or (in the case of each Company) the failure of any generator or other person to deliver electricity to that Company or any deficiency in such delivery to the extent that such failure or deficiency or the consequences thereof could not have been prevented by Good Industry Practice by the Company: provided that lack of funds shall not be interpreted as a cause beyond a person's reasonable control.

Gas Meter Asset Manager	has the meaning given to the expression 'Meter Asset Manager' in condition 1 of the standard conditions applicable to Gas Supply Licences.
Gas Supplier	has: a. in respect of Section 2C, the meaning given to that term in Clause 52A.2; and b. in respect of Section 2D, the meaning given to that term in Clause 52G.2.
Gas Supplier Party	means a Party that holds a Gas Supply Licence (whether or not that Party is also a Supplier Party and/or a CVA Registrant).
Gas Supply Licence	means a licence to supply gas granted pursuant to Section 7A of the Gas Act 1986.
Gas System Planner Licence	means a licence granted or treated as granted under section 7AA(1) of the Gas Act 1986.
Gateway	has the meaning given to that term in the Data Transfer Service Agreement.
Generation Licence	means a licence granted, or treated as granted, pursuant to Section 6(1)(a) of the Act.
Generator	means a person from whom a User purchases, or proposes to purchase, electricity, at an Entry Point (who may from time to time be supplied with electricity as a Customer of that User (or another electricity supplier) through an Exit Point).
Generator Installation	means any structure, equipment, lines, appliances or devices used or to be used by a Generator and connected or to be connected directly or indirectly to a Distribution System.
General Objectives	has the meaning given to that term in Clause 3.1.

Good Industry Practice	means the exercise of that degree of skill, diligence, prudence and foresight which would reasonably and ordinarily be expected from a skilled and experienced operator engaged in the same type of undertaking under the same or similar circumstances.
Green Deal Premises	has the meaning given to that term in the Distribution Licences.
Green Deal Provider	means a person who is authorised to act as a green deal provider under the Green Deal Framework (Disclosure, Acknowledgement, Redress etc.) Regulations 2012.
Grid Code	has the meaning given to that term in the Electricity System Operator Licence.
Group	means, in respect of each Party Category and subject to Clause 12.3, each Party that is a member of that Party Category collectively with that Party's Affiliates (if any) who are also members of that Party Category.

IDNO Party	means a Party that holds a Distribution Licence in which Section B of the standard distribution licence conditions does not have effect, whether or not that Party is also engaged in the supply or generation of electricity.
IDNO/OTSO Party	means an IDNO Party or the OTSO Party (and IDNO/OTSO Parties shall mean the IDNO Parties and the OTSO Party collectively).
Implementation	has the meaning given to that term in Clause 14.1.
Industry Standing Data	has the meaning given to that term in the Balancing and Settlement Code.
Information Request Notice	A notice that will be issued by the OTSO Party to a Party setting out the OTSO Party's reasonable requirements for relevant information in accordance with section 172 of the Energy Act 2023. This will be prepared in accordance with the OTSO Party's published Information Request Statement.
Information Request Statement	A statement prepared and published by the OTSO Party, in accordance with section 172 of the Energy Act 2023 and Condition D2.5 of the Electricity System Operator Licence and Gas System Planner Licence, setting out the process that the OTSO Party will follow when requesting information from a Party by the issue of an Information Request Notice.
Initial Account	has the meaning given to that term in Clause 20.3.
Initial Settlement Run	has the meaning given to that term in the Balancing and Settlement Code.
Intellectual Property	means patents, registered design rights, unregistered design rights, domain names, copyrights, rights in trade marks whether registered or not, goodwill and rights in confidential information and know-how, and any associated or similar rights (including, in all cases, applications and rights to apply thereof).
Interconnection	means, in respect of each relevant Bilateral Connection Agreement, to connect (or permit the connection of) the User's System (or any Electric Lines connected thereto) to: a. the Company's Distribution System, at Connection Points other than those that are the subject of the Bilateral Connection Agreement; or b. a Distribution System of any person other than the Company, or to an Offshore Transmission System, where (in either case) that system is connected (directly or indirectly) to a source of energy (other than via the Connection Points that are subject to the Bilateral Connection Agreement), in each case so that (subject to energisation) electricity may flow to or from the User's System.
Interested Industry Participant	has the meaning given to that term in Schedule 14.
Interim Information Settlement Run	has the meaning given to that term in the Balancing and Settlement Code.
Invoice Date	means, in respect of each account (including an Initial Account or Reconciliation Account), the date on which that account is produced by a Company pursuant to this Agreement.
Independent System Operator and Planner	means a person designated by the Secretary of State under section 162 of the Energy Act 2023 as the holder of the Electricity System Operator Licence and the Gas System Planner Licence.
IP Completion Day	has the same meaning as that given in section 39(1) of the European Union (Withdrawal Agreement) Act 2020.

kVA	means kilovoltamperes.
Late Payment Notice	has, in respect of Section 2A, the meaning given to that term in Clause 23.2, and, in respect of Section 2B, has the meaning given to that term in Clause 46.2.
Lead Code	means the Energy Code which the Cross Code Steering Group has designated as such for the purpose of progressing a variation that has an impact on more than one Energy Code.
Legacy Meter Asset Provision	means the provision of Legacy Metering Equipment (as such term is defined in the Distribution Licences).
Licence	means a licence granted, or treated as granted, pursuant to Section 6 of the Act.

Market-wide Data Service	has the meaning given to that term in the BSC.
Market Domain Data	has the meaning given to that term in the BSC.
Market Domain I.D.	has the meaning given to that term in the Data Transfer Service Agreement.
Market Message	means a message containing Data Items intended to be sent under or in connection with an Energy Code.
Market Participant ID	has the meaning given to that term in Industry Standing Data.
Market Sanction	has the meaning given to that expression in the Retail Energy Code.
Maximum Export Capacity	means: a. in respect of Section 2A and any Entry Point, the maximum amount of electricity, as agreed with the Company and expressed in kilowatts or kilovoltamperes, which may be exported onto the Distribution System via that Entry Point; and b. in respect of Section 2B and any Bilateral Connection Agreement, the maximum amount of electricity, as set out in that Bilateral Connection Agreement and expressed in kilowatts or kilovoltamperes, which may be exported onto the Company's Distribution System via the Connection Point or defined group of Connection Points to which that Bilateral Connection Agreement relates.
Maximum Import Capacity	means: a. in respect of Section 2A and any Exit Point, the maximum amount of electricity, as agreed with the Company and expressed in kilowatts or kilovoltamperes, which may be imported from the Distribution System via that Exit Point; and b. in respect of Section 2B and any Bilateral Connection Agreement, the maximum amount of electricity, as set out in that Bilateral Connection Agreement and expressed in kilowatts or kilovoltamperes, which may be imported from the Company's Distribution System via the Connection Point or defined group of Connection Points to which that Bilateral Connection Agreement relates.
Meta Data Owner	means the Energy Code responsible for the control of the meta data associated with the Data Item or Market Message, as identified in the Energy Market Data Specification. Changes to the meta data are administered via the change management or modification process under the relevant Energy Code, in conjunction with the REC Code Manager's administration of the Energy Market Data Specification, as described in the REC Change Management Schedule.
Meter Administrator	has the meaning given to that term in the Balancing and Settlement Code.
Meter Asset Provider	means, in respect of any metering equipment, the person who provides that metering equipment (whether or not that person owns the metering equipment).
Meter Operation Services Agreement	means an agreement between the Meter Operator Agent and the User (or, where applicable, the Connectee) for the provision of meter operation services to be provided by the Meter Operator Agent.
Meter Operator Agent	has the meaning given to that term in the Balancing and Settlement Code.
Meter Operation Code of Practice	has the meaning given to the term "Consolidated Metering Code of Practice" in the Retail Energy Code.
Meter Serial Number	means the unique identifier for an individual Metering Point device.
Meter Technical Details	has the meaning given to that term in the BSC.
Metering Data	means, in respect of a Metering Point or Metering System: a. any Meter Technical Details associated with that Metering Point or Metering System; and/or b. data concerning the quantities of active energy and reactive energy (exported or imported) measured, collected or otherwise determined as having been conveyed across that Metering Point or Metering System.
Metering Point	means the point at which a supply to (export) or from (import) a Distribution System: a. is or is intended to be measured; or b. where metering equipment has been removed, was or was intended to be measured; or c. in the case of an Unmetered Supply under the Unmetered Supplies Procedure, is deemed to be measured, where in each case such measurement is for the purposes of ascertaining a Supplier/CVA Registrant's liabilities under the Balancing and Settlement Code.
Metering System	means a metering system registered in CMRS in accordance with the provisions of the BSC, and relating to an Entry Point or an Exit Point.

MHHS	means market-wide half-hourly settlement, to be implemented via MHHS Implementation (under and as defined in the BSC).
Minister of the Crown	As defined in the Electricity System Operator Licence.
Modification	means any actual or proposed replacement, renovation, modification, alteration or construction: a. by or on behalf of the Company to the Company's Electrical Plant or Electric Lines (or the manner of their operation); or b. by or on behalf of the User (or, in the case of the OTSO Party, the Offshore Transmission Owner) to the User's (or that owner's) Electrical Plant or Electric Lines (or the manner of their operation), which in either case has, or may have, a material effect on the User (or the User's System) or on the Company (or the Company's Distribution System) respectively.
Modification Application	means an application for a Modification in the form set out in the relevant Bilateral Connection Agreement.
Modification Offer	means an offer made pursuant to Clause 52 and in the form set out in the relevant Bilateral Connection Agreement setting out the terms for a Modification.
MPAS	has the meaning given to the term “Metering Point Administration Service” in the Distribution Licence, and which includes the Electricity Retail Data Service under the REC and the Supplier Meter Registration Service under the BSC.
MPAS Provider	means a DNO Party or IDNO Party in its capacity as the person who provides the services described in Condition 18 of the Distribution Licences.
MPAN	means the core meter point administration number, a 13-digit reference used in MPAS to identify a Metering Point.

National Terms of Connection	has the meaning given to that term in Clause 17.1.
Nominated Calculation Agent	means the independent person notified as such to the IDNO Parties from time to time, such person to be agreed between the DNO Parties (or, in the absence of unanimous agreement, the majority of the DNO Parties) and appointed by the DNO Parties for the purposes of Clauses 42.12 and 42.13 and Schedule 29.
Offshore Transmission Owner	means, in respect of an Offshore Transmission System, the owner of that Offshore Transmission System.
Offshore Transmission System	has the meaning given to that term in the Grid Code.
Operational Metering Equipment	means metering equipment suitable to provide a Company with such data as it requires for use of system or operational purposes.
Other Charges	has the meaning given to that term in Clause 19.2.
OTSO Party	means the Independent System Operator and Planner in its capacity as the operator of Offshore Transmission Systems.

Panel	means the body established as such in accordance with Clause 5.
Panel Member	has the meaning given to that term in Clause 5.5.
Panel Objectives	has the meaning given to that term in Clause 5.2.
Panel Chair	means the person appointed as such in accordance with Clause 7.1.
Panel Secretary	means the person appointed as such in accordance with Clause 7.5.
Part 1 Matter	has the meaning given to that term in Clause 9.4.
Part 2 Matter	has the meaning given to that term in Clause 9.5.
Party	means a party to this Agreement from time to time, but excluding (except in the case of Clauses 53, 54.1.1, 58 and 60) DCUSA Ltd.
Party Category	means, as the context requires, one of the following categories: a. the DNO Parties collectively; b. the IDNO/OTSO Parties; c. the Supplier Parties collectively; d. the CVA Registrants collectively; e. the Gas Supplier Parties collectively; f. the SIP Parties collectively, save that, in determining which Party Categories are eligible to vote on a particular Change Proposal, the IDNO Parties and the OTSO Party may be considered separately, so that the IDNO Parties may be eligible to vote on a Change Proposal and the OTSO Party not (or vice versa).
Party Details	means, in respect of each Party, the information relating to that Party and corresponding to the heads of information set out in Schedule 11.

Party Liable	has the meaning given to that term in Clause 53.1.
Password Controlled Pages	has the meaning given to that term in Schedule 14.
Payee	means, in respect of any Charges payable pursuant to Section 2A, the Party to which those Charges are payable (ordinarily being the Company, but being the User in the case of negative Use of System Charges, as referred to in Clause 19.1C).
Payment Default	has, in respect of Section 2A, the meaning given to that term in Clause 23.1, and, in respect of Section 2B, the meaning given to that term in Clause 46.1.
Payor	means, in respect of any Charges payable pursuant to Section 2A, the Party obliged to pay those Charges (ordinarily being the User, but being the Company in the case of negative Use of System Charges, as referred to in Clause 19.1C).
Permission	has the meaning given to that term in Schedule 5.
Permitted Third Party Metering Works	means, in respect of a Metering Point, works by (or on behalf of) a Third Party Electricity Supplier or a Gas Supplier in respect of that Metering Point (being the Third Party Metering Point for the Third Party Electricity Supplier or Gas Supplier) where and to the extent that such works are reasonably necessary in relation to statutory or licence duties concerning (as applicable) (i) a Metering Point for which the Third Party Electricity Supplier is Registered or (ii) a Premises for which the Gas Supplier is the Responsible Gas Supplier; provided that those works shall be limited to one or more of the following: a. minimal repositioning of the metering equipment relating to the Third Party Metering Point within a communal metering equipment space; b. work on looped neutral(s) on the metering equipment relating to the Third Party Metering Point; c. work on a shared supply used by the metering equipment relating to the Third Party Metering Point; d. Revenue Protection Activity relating to the Third Party Metering Point; e. installation of an isolator in respect of the metering equipment relating to the Third Party Metering Point; f. installing, operating inspecting, maintaining, repairing, renewing, repositioning, replacing and/or removing a Smart Metering Comms Hub Device; and or g. installing, operating, inspecting, maintaining, repairing, renewing, repositioning, replacing and/or removing Relevant Alt HAN Equipment (including so that the Relevant Alt HAN Equipment may draw power from the Distribution System; provided that the Relevant Alt HAN Equipment must be installed in such a way as to minimise the risk of illegal abstraction of electricity).
Point to Point Alt HAN Equipment	has the meaning given to that term in standard condition 55 of the Supply Licences.
Post-Final Settlement Run	has the meaning given to that term in the Balancing and Settlement Code.
Power Purchase Contract	means a contract between a Supplier Party and a Generator for the purchase by the Supplier Party of electricity generated by such Generator and (if agreed in such contract) the sale of electricity to the Generator by the Supplier Party.
Prescribed Period	means: a. in respect of each of relevant activities described in Clause 30.5A or 30.5B, the period for performance of that activity set out in Part 1 of Schedule 24; or b. in respect of Clause 35.5 or 33.6, as defined in regulation 3 of the ESPR.
Premises	has the meaning given to that term in the Act.
Prescribed Sum	has the meaning given to that term in regulation 3 of the ESPR.
Price Control Financial Model or PCFM	has the meaning given to that term in the charge restriction conditions in the Distribution Licences.
Prioritisation Category	has the meaning given to that term by the Authority Guidance on Code Modification Prioritisation.
Prioritisation Criteria	has the meaning given to that term by the Authority Guidance on Code Modification Prioritisation.
Proposer	has the meaning given to that term in Clause 10.3.
Proximate Metering Equipment	means metering equipment relating to a Metering Point which is located in close proximity to metering equipment relating to one or more other Metering Points.
Public Pages	has the meaning given to that term in Schedule 14.
Qualification	has the meaning given to that term in the Balancing and Settlement Code, and Qualified shall be construed accordingly.
Quarter	means the period of three months commencing on 1 January, 1 April, 1 July and 1 October respectively in each year.

Radio Teleswitch Agreement	means the agreement of that name dated 1 April 2001, which details the rights and obligations of its signatories in relation to the use of radio teleswitches.
REC Code Manager	means the code manager for the REC.
Reconciliation Account	has the meaning given to that term in Clause 20.4.
Reconciliation Run	has the meaning given to the term “Reconciliation Settlement Run” in the Balancing and Settlement Code.
Recoverable Costs	has the meaning given to that term in Clause 8.1.
Re-energise	means: a. in respect of Section 2A, 2C, 2D, 2E, 2F, 2G or 2H, deliberately to allow the flow of electricity: i. in the case of an Exit Point, from the Distribution System through the relevant Exit Point (or, in the case of an Unmetered Supply, any one or more of the relevant Exit Points) to; and/or ii. in the case of an Entry Point, to the Distribution System through the relevant Entry Point (or, in the case of an Unmetered Supply, any one or more of the relevant Entry Points) from, a Connected Installation, where such flow of electricity was previously prevented by De-energisation Works (and cognate expressions shall be construed accordingly); and b. in respect of Section 2B, deliberately to allow the flow of electricity through a Connection Point, where such flow was previously prevented by De-energisation Works (and cognate expressions shall be construed accordingly).
Re-energisation Works	Means: a. the movement of any switch, b. the replacement of any fuse or meter; or c. the undertaking of any other physical works, to Re-energise a Connection Point, Metering Point or Metering System.
Registered	means, in respect of a Supplier/CVA Registrant and: a. a Metering Point, that that Party is registered in respect of that Metering Point under and in accordance with the Retail Energy Code; and b. a Metering System, that that Party is registered in respect of that Metering System under and in accordance with the BSC.
Registered Capacity	has the meaning given to that expression in the Distribution Code.
Registration De-Activation Request	has the meaning given to that term in the REC.
Regulations	means the Electricity Safety, Quality and Continuity Regulations 2002 (S1 2002/2665).
Regulatory Alliance	has the meaning given to that term in the REC.
Related Person	means, in relation to an individual, any member of that individual's immediate family; any partner with whom that individual is in partnership; that individual's employer; any Affiliate of such employer; any person by whom that individual was employed in the previous 12 months; and any company (or Affiliate of a company) in respect of which that individual (individually or collectively with any member of that individual's immediate family) controls more than 20% of the voting rights in respect of the shares in that company.
Related Undertaking	means, in respect of any person, any undertaking in which that person has a participating interest as defined in regulations made under Part 15 of the Companies Act 2006.
Relevant Alt HAN Equipment	means Point to Point Alt HAN Equipment which is of a type that, in respect of any Premises, needs to be situated in close proximity to the electricity meter forming part of the Smart Metering System at that Premises.

Relevant Charging Statement	means, as the case may require, any of the following: a. the statement prepared by a Company in relation to charges for use of system for the time being in force pursuant to Condition 14 of its Distribution Licence; b. the statement prepared by a Company in relation to charges for the provision of MPAS for the time being in force pursuant to Condition 18 of its Distribution Licence; c. the statement prepared by a Company in relation to charges for Legacy Meter Asset Provision and Data Services for the time being in force pursuant to Condition 36 of its Distribution Licence; d. the statement prepared by a Company and for the time being in force pursuant to Condition 38 of its Distribution Licence in relation to Last Resort Supply Payments (as described in that Condition); and e. any statement prepared by a Company and for the time being in force in relation to charges for any other services offered by the Company.
Relevant Exempt Supplier	means, in respect of a User, an Exempt Supplier which has entered into an Enabling Agreement with that User in respect of supplies of electricity to Customers of that Exempt Supplier.
Relevant Instruments	means: a. the Act and all subordinate legislation made under it as amended from time to time; b. the Data Protection Legislation and all subordinate legislation made under it as amended from time to time; c. the Distribution Licence and the Supply Licence, and any determination, direction, consent or notice made or issued by the Authority pursuant to the terms thereof; d. the Data Transfer Service Agreement; e. the Retail Energy Code; f. the Connection and Use of System Code; g. the Balancing and Settlement Code; h. the Smart Energy Code, and, whether under any of the foregoing or otherwise, all authorisations, approvals, licences, exemptions, filings, registrations, notarisations, consents and other matters which are required, or which a Company acting in accordance with Good Industry Practice would obtain, in connection with the provision of the services under this Agreement, of or from any Competent Authority.
Report Phase	has the meaning given to that term in Clause 11.19.
Responsible Gas Supplier	means, in respect of any Premises, the Gas Supplier Party that is registered under the Supply Point Administration Agreement (as defined in condition 1 of the standard conditions applicable to Gas Supply Licences) as responsible for a gas supply point at that Premises.
Retail Code Consolidation	has the meaning given in the Retail Energy Code.
Retail Energy Code or REC	means the code of that name designated and maintained under the Supply Licences.
Retail Energy Code Company or RECCo	means RECCo, as defined in the Retail Energy Code.
Revenue Protection Activity	means an activity relating to actual or suspected Theft of Electricity, including the identification, prevention, investigation and/or resolution of cases of Theft of Electricity, and any other activity within the subject matter of the Revenue Protection Code of Practice.
Revenue Protection Agent	has the meaning given to that term in the Revenue Protection Code of Practice.
Revenue Protection Code of Practice	means a. until Retail Code Consolidation, the code of practice set out in Schedule 23; or b. from Retail Code Consolidation, the Theft Code of Practice Schedule which forms part of the Retail Energy Code.
Revenue Protection Service	means any service provided by a person to another person in respect of one or more Revenue Protection Activities.

Safe	means a situation in which the Company's Electric Lines or Electrical Plant does not pose a danger, including danger of death of or injury to persons and/or danger of damage to or destruction of property.
Safe Isolation Provider	has, in respect of Section 2H, the meaning given to that expression in Clause 52Y.1.
Safe Isolation Works	means, in respect of an Entry/Exit Point, works by a SIP Party to: a. De-energise that Entry/Exit Point; b. (if reasonably necessary) adjust the terminals of the meter and associated equipment and re-make the connection to them to make safe and remedy any disturbance of the connection that may have occurred; c. if required, terminate/replace the customer tails on the Electricity Supplier's meter (provided that such tails must have been provided and tested by the SIP Party or the customer's electrical engineer); and d. Re-energise that Entry/Exit Point.
Sandbox Applicant	means the applicant who has made a Sandbox Application and whose identity is set out in the relevant Sandbox Application.
Sandbox Application	means a written request for a derogation, made by the Sandbox Applicant to the Authority pursuant to the Authority's regulatory sandbox procedures, and which the Authority has passed to the Secretariat for review (such regulatory sandbox procedures being the Authority's procedures from time to time whereby prospective energy innovators can seek temporary relief from certain industry rules).
Sandbox Application Assessment Form	has the meaning given to that term in Clause 56.11.
Sandbox Pre-Approval	means a written notification from the Authority detailing whether it believes a Sandbox Application, for which it has received a Sandbox Application Assessment Form, should be approved.
Sandbox Register	means a register for the purposes of assisting the Panel in the operation and recording of Sandbox Applications from initial requests made by a Sandbox Applicant through to completion of successful Sandbox Applications.
Smart Energy Code or SEC	means the smart energy code designated for the purposes of the smart meter communication licences granted pursuant to the Act and the Gas Act 1986.
SECCo	means the company established to facilitate the operation of the SEC panel, as defined in the Smart Energy Code.
Secretariat	has the meaning given to that term in Clause 7.36.
Secretary of State	has the meaning given to that term in the Interpretation Act 1978.
Security and Safety of Supplies Statement	means, in respect of each DNO Party or IDNO Party, the statement prepared by that Party in relation to security and safety of supplies for the time being in force pursuant to Condition 8 of its Distribution Licence.
Service Level	means the Company performing its obligations under Clause 30.5A.2, 30.5A.4 and 30.5B.2 in accordance with the requirements of those Clauses.
Settlement	has the meaning given to that term in the Balancing and Settlement Code.
Settlement Class	has the meaning given to that term in the Balancing and Settlement Code.
Settlement Class MSiD Count	has the meaning given to that term in the data flow / market message (as amended from time to time in accordance with the provisions of the Retail Energy Code).
Settlement Class Unit Count	has the meaning given to that term in the data flow / market message (as amended from time to time in accordance with the provisions of the Retail Energy Code).
Settlement Code	has the meaning given to that term in the Market Domain Data.
Settlement Day	has the meaning given to that term in the Balancing and Settlement Code.
Settlement Period	has the meaning given to that term in the Balancing and Settlement Code.
Settlement Run	means, as appropriate, an Initial Settlement Run, Reconciliation Run, or Interim Information Settlement Run.
Significant Code Review	means a review of one or more matters which the Authority considers likely to: a. relate to this Agreement (either on its own or in conjunction with one or more other industry codes); and b. be of particular significance in relation to its principal objective and/or general duties (under section 3A of the Act), statutory functions and/or relevant obligations arising under EU law, and concerning which the Authority has issued a notice to the Parties (among others, as appropriate) stating: (i) that the review will constitute a significant code review; (ii) the start date of the review; and (iii) the matters that will fall within the scope of the review.
Significant Code Review Phase	means the period commencing on the start date of a Significant Code Review as stated by the Authority (or recommencing on the date of a "back-stop" direction under Condition 22.9ED of the Distribution Licences), and ending in accordance with Condition 22.9E of the Distribution Licences.
SIP Party	means a Party that operates as a Meter Operator Agent.

Small Participant	means: a. a generator, supplier, distributor, or new entrant to the electricity market in Great Britain that can demonstrate to the Secretariat that it is resource-constrained and, therefore, in particular need of assistance; b. any other Party or class of Parties that the Secretariat considers to be in particular need of assistance; or c. a Party or class of Parties that the Authority has identified to the Secretariat as being in particular need of assistance.
Small Scale Generator	means any generator that is installed in accordance with, and complies with the requirements of, Regulation 22 (2) sub-paragraphs (a) to (c) of the Regulations.
Smart Data Service	has the meaning given to that term in the Balancing and Settlement Code.
Smart Metering Comms Hub Device	means a device installed at a Premises that enables data to be communicated to the Gas Supplier (or its appointed data communications company) from a gas smart meter within the Premises (and vice versa), and shall include any equipment associated with that device (including its power supply unit).
Smart Meter Installation Forecast	means, for any Quarter, the forecast of smart meter installations provided by a Supplier Party pursuant to Part 4 - User Smart Meter Installation Forecast Reporting, of Schedule 24 during the fifth Quarter preceding that Quarter.
Smart Metering System	has the meaning given to that expression in the Supply Licences.
Standard Settlement Configuration	has the meaning given to that term in the Balancing and Settlement Code.
STC	has the meaning given to that term in the CUSC.
Supercustomer DUoS Report	means a report providing the data items set out in the D0030 data flow / market message for non-MHHS Metering Points and the REP-002B data flow / market message for MHHS Metering Points (as, in either case, amended from time to time in accordance with the provisions of the Energy Market Data Specification).
Supplier/CVA Registrant	means a Supplier Party or CVA Registrant (and Supplier/CVA Registrant shall mean the Supplier Parties and the CVA Registrants collectively).
Supplier Meter Registration Service	has the meaning given to that term in the BSC.
Supplier Party	means a Party that holds a Supply Licence and that does not hold a Distribution Licence, and, for the avoidance of doubt, a Party may be both a Supplier Party and a CVA Registrant.
Supplier Volume Allocation Agent or SVAA	has the meaning given to “Supplier Volume Allocation Agent” in the Balancing and Settlement Code.
Supply Business	means, in respect of a Supplier Party, that Party's business of supplying electricity (as authorised pursuant to the Act).
Supply Contract	means a contract (whether oral, in writing or deemed) between a Supplier Party, or any Relevant Exempt Supplier, and a Customer for a supply of electricity to such Customer through an Exit Point.
Supply Licence	means a licence granted, or treated as granted, pursuant to Section 6(1)(d) of the Act.
Supply Number	has the meaning given to that term in the Retail Energy Code.
Surplus Vote	has the meaning given to that term in Clause 12.13.
Surplus Vote Adjustment	has the meaning given to that term in Clause 12.10.
System	means, in respect of: a. a DNO/IDNO Party, that Party's Distribution System; and b. the OTSO Party, the Offshore Transmission System relating to the relevant Connection Point (and references to the User's System shall be construed accordingly, notwithstanding that the OTSO Party may not own that Offshore Transmission System).
Systems Connection Point	has the meaning given to that term in the BSC.
System Outage	means, in relation to a DNO Party or IDNO Party, a planned or unplanned interruption to the flow of electricity through the whole or part of that Party's Distribution System implemented by or on behalf of that Party for safety or system security reasons or to enable that Party to inspect or effect alterations, maintenance, repairs or additions to any part of that Distribution System.

Theft In Conveyance	means the abstraction of electricity (regardless of where such abstraction takes place) for use otherwise than at a Premises for which there is a Metering Point or Metering System that is Registered by a User.
Theft of Electricity	includes (but is not limited to) Theft In Conveyance, the circumstances described in paragraph 4 of schedule 6 to the Act, and the circumstances described in paragraph 11 of schedule 7 to the Act.

Theft Risk Assessment Service Arrangements	means the arrangements for a theft risk assessment service and other related measures that the Supplier Parties are obliged to maintain pursuant to the Supplier Licences (but excluding the Energy Theft Tip-Off Service), which service is, from Energy Theft Consolidation, being moved from this Agreement to the Retail Energy Code.
Third Party Electricity Supplier	means, in relation to a Metering Point, the Supplier Party Registered for a second Metering Point where the two Metering Points have Proximate Metering Equipment (as further described in Clause 52M.2 or 52Q.2, as applicable).
Third Party Metering Point	means: a. in respect of a Supplier Party, a Metering Point for which that Supplier Party is not the Registered Supplier, where that Metering Point has Proximate Metering Equipment with a Metering Point for which that Supplier Party is Registered; or b. in respect of a Gas Supplier Party, either (i) a Metering Point for a Premises for which that Gas Supplier Party is the Responsible Gas Supplier; or (ii) a different Metering Point which has Proximate Metering Equipment with the Metering Point referred to in limb (i).
Transactional Charges	has, in respect of Section 2A, the meaning given to that term in Clause 22.1, and, in respect of Section 2B, the meaning given to that term in Clause 45.1.
UMSO	means an Unmetered Supplies Operator (as defined in the BSC), including where a DNO Party has been appointed to such role by an EDNO pursuant to Clause 42.14.
Unit	means a kilowatt hour.
Unit Rate	means a charge in pence and/or pounds applied to a Unit.
Unmetered Supply Certificate	means a certificate issued by a Company or by its UMSO (in each case at its sole discretion) to a Customer in accordance with the Unmetered Supplies Procedure.
Unmetered Supplies Data Service	has the meaning given to that term in the BSC.
Unmetered Supplies Procedure	means Section S of the Balancing and Settlement Code and BSCP 520, or for MHHS means Section S of the Balancing and Settlement Code and BSCP 700 and BSCP 704.
Unmetered Supply **or** **UMS**	means a supply of electricity the quantity of which the Company, through the issue of a relevant Unmetered Supply Certificate, has authorised not to be measured by physical metering equipment.
Urgent Change Proposal	has the meaning given to that term in Clause 10.12.
Use of Distribution System	means, in respect of a Company or User, the use by that User of that Company's Distribution System for the passing of electricity into a Distribution System and for the conveyance of such electricity by that Company through its Distribution System: a. in the case of Section 2A, to Exit Points or from Entry Points; or b. in the case of Section 2B, to or from Connection Points.
Use of System Charges	has, in respect of Section 2A, the meaning given to that term in Clause 19.1C, and, in respect of Section 2B, the meaning given to that term in Clause 43.2.1.
Use of System Charging Methodologies	means the CDCM and the EDCM.
User	has, in respect of Section 2A, the meaning given to that term in Clause 15.2, and, in respect of Section 2B, has the meaning given to that term in Clause 36.2.
User Installation	means any structures, equipment, lines, appliances or devices used or to be used by a User and connected or to be connected directly or indirectly to the Distribution System at any Exit Point or Entry Point in relation to which that User is Registered.

Value Added Tax or VAT	means VAT as defined in the Value Added Tax Act 1994 and any tax of a similar nature which may be substituted for or levied in addition to it.
Voting Procedure	has the meaning given to that term in Clause 12.1.
Web Account	has the meaning given to that term in Schedule 14.
Website	means a dedicated website established at the direction of the Panel for the purposes of this Agreement.
Weighted Vote	has the meaning given to that term in Clause 12.8.
WG Chair	has the meaning given to that term in Clause 7.28.
Working Day	has the meaning given to that term in Section 64 of the Act.
Working Group	means a sub-committee established by the Panel in accordance with Clause 7.24.
Working Hours	has the meaning given to that term in the ESPR.

Works	has the meaning given to that term in Schedule 5.

Interpretation

1.2 In this Agreement, unless the context otherwise requires, any reference to:

1.2.1 a "person" includes a reference to an individual, a body corporate, an association or a partnership;

1.2.2 the singular includes the plural, and vice versa;

1.2.3 a gender includes every gender;

1.2.4 a numbered Clause, Section or Schedule is a reference (respectively) to a clause, part or section of, or a schedule to, this Agreement which bears that number;

1.2.5 a numbered Paragraph or Annex is a reference (respectively) to a paragraph of, or an annex to, the Schedule in which such reference occurs;

1.2.6 a numbered Condition (with or without a letter) is a reference to the standard condition bearing that number (and, where relevant, letter) in the licence indicated;

1.2.7 writing includes all methods of reproducing words in a legible and non-transitory form;

1.2.8 "include", "including" and "in particular" are to be construed without limitation to the generality of the preceding words;

1.2.9 any statute or statutory provision includes any subordinate legislation made under it, any provision which it has modified or re-enacted, and any provision which subsequently supersedes or re-enacts it (with or without modification);

1.2.10 an agreement, code, licence or other document is to such agreement, code, licence or other document as amended, supplemented, novated or replaced from time to time;

1.2.11 a term that is stated to have the meaning given to it in the BSC is, where the BSC contains more than one definition of that term, a reference to that term as defined in annex 1 of section X of the BSC; and

1.2.12 a term that is stated to have the meaning given to it in the Distribution Licences or the Supply Licences is a reference to that term as defined in the standard conditions of the Distribution Licences or of the Supply Licences (as applicable).

1.3 The headings in this Agreement are for ease of reference only and shall not affect its interpretation.

2. COMMENCEMENT AND DURATION

Commencement

2.1 This Agreement shall take effect from 00.00 on 06 October 2006.

Duration

2.2 Once it comes into effect, this Agreement shall remain in effect:

2.2.1 in respect of each Party, until (subject to Clauses 54.8 and 54.9) such Party ceases to be a Party in accordance with Clause 54.5 or 60.20; and

2.2.2 generally, until (subject to Clauses 54.8 and 54.9) all of the DNO Parties and all of the IDNO Parties have ceased to be Parties in accordance with Clause 54.5.

3. DCUSA OBJECTIVES

3.1 The objectives of this Agreement (such objectives being the General Objectives), except in respect of the Charging Methodologies, are set out in Condition 22 of the Distribution Licences. For ease of reference, the General Objectives are set out below using the terminology of this Agreement (but in the case of any inconsistency with the Distribution Licences, the Distribution Licences shall prevail):

3.1.1 the development, maintenance and operation by each of the DNO Parties and IDNO Parties of an efficient, coordinated, and economical Distribution System;

3.1.2 the facilitation of effective competition in the generation and supply of electricity and (so far as is consistent with that) the promotion of such competition in the sale, distribution and purchase of electricity;

3.1.3 the efficient discharge by each of the DNO Parties and IDNO Parties of the obligations imposed upon them by their Distribution Licences; and

3.1.4 the promotion of efficiency in the implementation and administration of this Agreement and the arrangements under it; and

3.1.5 compliance with the EU Internal Market Regulation and any relevant legally binding decisions of the European Commission and/or the Agency for the Co-operation of Energy Regulators.

3.2 The objectives of this Agreement in respect of the Charging Methodologies only (such objectives being the Charging Objectives) are set out in Condition 22A of the Distribution Licences. For ease of reference, the Charging Objectives are set out below using the terminology of this Agreement (but in the case of any inconsistency with the Distribution Licences, the Distribution Licences shall prevail):

3.2.1 that compliance by each DNO Party with the Charging Methodologies facilitates the discharge by the DNO Party of the obligations imposed on it under the Act and by its Distribution Licence;

3.2.2 that compliance by each DNO Party with the Charging Methodologies facilitates competition in the generation and supply of electricity and will not restrict, distort, or prevent competition in the transmission or distribution of electricity or in participation in the operation of an Interconnector (as defined in the Distribution Licences);

3.2.3 compliance by each DNO Party with the Charging Methodologies results in charges which, so far as is reasonably practicable after taking account of implementation costs, reflect the costs incurred, or reasonably expected to be incurred, by the DNO Party in its Distribution Business; and

3.2.4 that, so far as is consistent with Clauses 3.2.1 to 3.2.3, the Charging Methodologies, so far as is reasonably practicable, properly take account of developments in each DNO Party's Distribution Business;

3.2.5 that compliance by each DNO Party with the Charging Methodologies facilitates compliance with the EU Internal Market Regulation and any relevant legally binding decisions of the European Commission and/or the Agency for the Co-operation of Energy Regulators; and

3.2.6 that compliance with the Charging Methodologies promotes efficiency in its own implementation and administration.

3.3 For the purposes of this Agreement, each of the Charging Methodologies achieves the Charging Objectives if it achieves them in the round, taking each Charging Objective with every other Charging Objective, and having due regard to any particular implications for the determination of the Use of System Charges or connection charges (as applicable) of the DNO Parties (or of any DNO Party) under any other Charging Methodology.

4. ACCESSION OF ADDITIONAL PARTIES

Eligibility for Admission

4.1 Any person who applies to be admitted as a Party (an **Applicant**) shall be entitled to be admitted as a Party, subject to and in accordance with the provisions of this Clause 4.

4.2 An Applicant may not be admitted as a Party if:

4.2.1 it is already a Party; or

4.2.2 (in the case of all Applicants other than the OTSO Party or those applying to be a Gas Supplier Party or a SIP Party) the Panel believes that the Applicant has no reasonable prospect of satisfying the relevant conditions precedent set out in Clause 16, in the six-month period following its application to be so admitted;

4.2.3 (in the case of only the OTSO Party or those applying to be DNO Parties or IDNO Parties) the Panel believes that the Applicant has no reasonable prospect of satisfying the relevant conditions precedent set out in Clause 37 in the six-month period following its application to be so admitted;

4.2.4 (in the case of the Crowded Meter Room Coordinator) the Applicant is not Alt HAN Company Limited (a company incorporated in England and Wales with company number 10002859); and/or

4.2.5 (in the case of only those applying to be a SIP Party) the Applicant is not a qualified metering equipment manager under the Retail Energy Code.

Accession Procedure

4.3 The Panel shall establish, in such format as it may prescribe, a form to be completed by Applicants (the Application Form) and shall publish a copy of the form on the Website together with a summary of the process set out in this Clause 4.

4.4 An Applicant shall submit a duly completed Application Form (and any other supporting documents required by that form) to the Panel.

4.5 As soon as reasonably practicable following receipt of an Application Form from an Applicant, the Panel shall:

4.5.1 notify the Applicant if it is ineligible to be admitted as a Party in accordance with Clause 4.2;

4.5.2 where the Applicant is not ineligible, check that the Application Form has been duly completed and that any supporting documentation requested has been provided, and notify the Applicant of any omissions;

4.5.3 where there are no such omissions, notify each Party and the Authority of the Applicant's identity and of the information that will, on that Applicant's admission as a Party, become its Party Details; and

4.5.4 prepare an Accession Agreement, in substantially the form set out in Schedule 9, for the Applicant and send it to the Applicant for execution.

4.6 Upon receipt by the Panel of an Accession Agreement, in substantially the form set out in Schedule 9, duly executed by an Applicant, DCUSA Ltd shall promptly:

4.6.1 execute and deliver a counterpart of such Accession Agreement on behalf of itself and all the Parties; and

4.6.2 send such executed counterpart of the Accession Agreement to the Applicant,

and the Panel shall give notice of that Applicant's accession (and the effective date of such accession) to the Applicant, to each other Party and to the Authority.

4.7 Subject to, and in accordance with, this Clause 4, each Party hereby irrevocably and unconditionally authorises DCUSA Ltd to execute and deliver, on behalf of such Party, any Accession Agreement, in substantially the form set out in Schedule 9, duly executed by an Applicant.

4.8 The accession of an Applicant to this Agreement shall be effective from the effective date set out in the relevant Accession Agreement.

Disputes as to Admission

4.9 Where:

4.9.1 the Panel determines that an Applicant is ineligible to be admitted as a Party in accordance with Clause 4.2;

4.9.2 an Applicant believes that the content of the prescribed Application Form is not consistent with the DCUSA Objectives; or

4.9.3 an Applicant believes that there has been an unreasonable delay in obtaining a response to its application or that the process set out in this Clause 4 has not been followed,

the Applicant may refer the matter to the Authority for its determination, which shall be final and binding.

SECTION 1.B - GOVERNANCE

5. FUNCTIONS AND CONSTITUTION OF THE PANEL

Establishment of the Panel

5.1 The Panel is hereby established. The Panel shall:

5.1.1 pursue the objectives, undertake the duties, and have the powers, set out in Clauses 5.2 to 5.4, and be composed in accordance with Clauses 5.5 to 5.9;

5.1.2 comprise Panel Members elected in accordance with Clause 6, who shall have the duties and protections set out in Clause 6; and

5.1.3 conduct its activities in accordance with the procedures set out in Clause 7.

Panel Objectives

5.2 In conducting its operations in accordance with this Agreement, the Panel shall act in a manner designed to achieve the following objectives (the **Panel Objectives**):

5.2.1 that this Agreement is given full and prompt effect in accordance with its terms and conditions;

5.2.2 that this Agreement is given effect in such a manner as will facilitate achievement of the DCUSA Objectives;

5.2.3 that this Agreement is given effect in a fair and economical manner; and

5.2.4 that this Agreement is given effect without undue discrimination between the Parties or any classes of Party.

Duties

5.3 Without prejudice to any other duties or obligations imposed on it under this Agreement, the Panel shall, subject to and in accordance with the other provisions of this Agreement:

5.3.1 manage and co-ordinate any applications from Applicants to become a Party in accordance with Clause 4;

5.3.2 manage and co-ordinate the process by which Panel Members are appointed, in accordance with Clause 6;

5.3.3 develop budgets in accordance with Clause 8;

5.3.4 manage and co-ordinate the modification process set out in Section 1C, and give effect to any modifications resulting from such process in accordance with Section 1C;

5.3.5 manage the termination of a Party's accession to this Agreement in accordance with Clause 54;

5.3.6 oversee and, where appropriate, approve the actions and decisions of DCUSA Ltd. as contemplated by Schedule 10;

5.3.7 periodically review this Agreement and operations under it, in order to evaluate whether this Agreement meets the DCUSA Objectives, and report to the Parties on the outcome of each such review;

5.3.8 at the written request of the Authority, undertake a review in accordance with Clause 5.3.7 in respect of such parts of this Agreement as the Authority may specify;

5.3.9 procure the creation, hosting and maintenance of the Website, which the Panel shall endeavour to ensure complies with the requirements of Schedule 14;

5.3.10 make available on the Website in accordance with Schedule 14:

A. an accurate and up-to-date copy of this Agreement;

B. subject to Clauses 57.1 and 57.3.1, a copy of each: (i) Change Proposal made; (ii) consultation issued in respect of a Change Proposal; and (iii) Change Report delivered to the Panel and/or the Authority; and

C. subject to Clauses 57.1 and 57.3.1, all the matters, minutes, reports, consultation responses, data and other information related to the change control process set out in Section 1C produced by or for, or made available to, the Panel, the Secretariat, the Panel Secretary or a Working Group (with the exception of contact details).

5.3.10.A arrange, in return for a charge not exceeding the reasonable cost of so doing, for the following to be supplied to any person requesting a copy of the same:

A. an accurate and up-to-date copy of this Agreement; and

B. subject to Clauses 57.1 and 57.3.1, any document referred to in Clause 5.3.10 (B) or 5.3.10 (C).

5.3.11 at the written request of the Authority, collect and provide to the Authority (or publish in such manner as the Authority may direct) such information regarding the operation of this Agreement as the Authority may reasonably request (and each Party shall provide to the Panel such information as the Panel reasonably requires in order to enable the Panel to comply with any such request of the Authority);

5.3.12 endeavour to establish joint working arrangements with other relevant industry committees and panels in order to facilitate robust interaction between this Agreement and the industry documents for which such industry committees and panels are responsible; and

5.3.13 consider whether it is appropriate to obtain insurance in respect of the costs, charges, expenses, damages and other liabilities referred to in Clause 6.20, and, where it is appropriate to do so, obtain such insurance.

Powers

5.4 Without prejudice to any other rights or powers granted to it under this Agreement, the Panel shall, subject to and in accordance with the other provisions of this Agreement, have the power to:

5.4.1 appoint and remove the Secretariat;

5.4.2 appoint and remove professional advisers;

5.4.3 consider, approve and authorise the licensing, sub-licensing, or any other manner of dealing with Intellectual Property belonging to DCUSA Ltd, for any use which does not hinder, delay or frustrate, in any way whatsoever, the DCUSA Objectives;

5.4.4 consider, approve and authorise the entering into by DCUSA Ltd of contracts under which DCUSA Ltd procures the performance by a third party of any activities which might otherwise be carried out by the Panel under this Agreement;

5.4.5 constitute Working Groups to which the Panel may delegate any of its duties and powers under this Agreement;

5.4.6 without prejudice to the generality of Clause 5.4.5 or the process for considering Change Proposals, and only where it sees fit, constitute Working Groups to consider and report on issues and problems relating to the operation of this Agreement that have been brought to its attention by one or more Parties; and

5.4.7 do anything necessary for, or reasonably incidental to, the discharge of its duties under this Agreement.

Panel Composition

5.5 The Panel shall comprise the following persons (each a Panel Member):

5.5.1 two persons elected by the DNO Parties;

5.5.2 one person elected by the IDNO/OTSO Parties;

5.5.3 two persons elected by the Supplier Parties;

5.5.4 one person elected by the CVA Registrants; and

5.5.5 any additional person appointed by the Authority in accordance with Clause 5.8.

5.6 No one person can hold more than one office as a Panel Member.

5.7 The following persons shall be entitled to attend and speak (but not vote) at any meeting of the Panel:

5.7.1 one person appointed from time to time, by notice to the Panel Secretary, by the Authority;

5.7.2 one person appointed from time to time, by notice to the Panel Secretary, by the Independent System Operator and Planner;

5.7.3 one person appointed from time to time, by notice to the Panel Secretary, by the Consumer Body (Citizens Advice and Citizens Advice Scotland acting together to jointly appoint one person);

5.7.4 (at the invitation of the Panel from time to time) a representative of BSCCo;

5.7.5 (at the invitation of the Panel from time to time) a representative of RECCo; and

5.7.6 (at the invitation of the Panel from time to time) a representative of SECCo.

Appointment of Additional Panel Member by the Authority

5.8 Where at any time:

5.8.1 no person is currently appointed as a Panel Member pursuant to this Clause 5.8; and

5.8.2 the Authority considers that there is a class or category of person having an interest in the distribution of electricity in Great Britain whose interests are not adequately represented in the composition of the Panel at that time, and whose interests would be better represented if a particular person were appointed as an additional Panel Member,

the Authority may (by notice to the Panel Secretary) appoint (subject to Clause 6.17) that particular person as a Panel Member. The Authority may, at any time thereafter by notice to the Panel Secretary, remove that person from the office of Panel Member.

Natural Persons

5.9 Each Panel Member, each Alternate, each person appointed in accordance with Clause 5.7 or 5.8, and each person serving on a Working Group from time to time must be an individual (and cannot be a body corporate, association or partnership).

6. PANEL MEMBERS

Election of Panel Members

6.1 Neither the Gas Supplier Parties nor the SIP Parties will be separately represented on the Panel. Accordingly, each reference in this Clause 6 to a 'Party Category' or the 'Party Categories' shall be reference to each Party Category or all Party Categories other than the Party Categories representing (respectively) the Gas Supplier Parties and the SIP Parties. Furthermore, the Crowded Meter Room Coordinator does not form a Party Category, and is not entitled to be separately represented on the Panel.

6.2 The Panel Members from time to time shall be elected in accordance with the following provisions:

6.2.1 no later than 40 Working Days before 1 December in each year, any individual shall be entitled, by notice in writing to the Panel Secretary specifying the Party Category in respect of which that individual wishes to stand and the company (if any) by which that individual is employed, to put that individual forward for election as a Panel Member or Alternate for that Party Category (the position as Panel Member or Alternative for a Party Category being, for the purposes of this Clause 6.2, a "**Role**");

6.2.2 the Panel Secretary shall ignore notices received from candidates who would, if elected, be obliged to resign in accordance with Clause 6.8.3;

6.2.3 no later than 30 Working Days before 1 December in such year, the Panel Secretary shall notify each Party of the candidates who have put themselves forward for election for each Role;

6.2.4 at the same time as it issues such notice, the Panel Secretary shall, in respect of those Roles (if any) for which the number of candidates exceeds the number of Panel Member or Alternate offices attributable to that Party Category and currently vacant or due to become vacant on the following 1 December, invite the Groups comprising that Party Category to vote for their favoured candidate for that Role;

6.2.5 each such Group shall be entitled to cast one vote per Role, and shall cast such vote by means of a system established by the Panel which ensures that each Party Category casts only one vote per Role and which complies with the same requirements as are set out in Clauses 12.4.5 and 12.4.6;

6.2.6 each such Group shall be given 10 Working Days from the date of notification under Clause 6.2.3 to cast such vote; and

6.2.7 as soon as reasonably practicable following the expiry of such 10 Working Days, the Panel Secretary shall notify the Parties of the result of such vote, listing, in respect of each Role, the candidate who received the most votes first, the candidate who received the second most votes second, and so on. In the event that two or more candidates in respect of a Role for a Party Category received the same number of votes, the Panel Secretary shall invite the Groups comprising that Party Category to vote, within such time period as the Panel Secretary may reasonably specify, for their preferred candidate from those tied candidates, the result of such vote determining the order in which those candidates should be listed.

6.3 The Panel Members and Alternates elected in respect of each Party Category shall be as follows:

6.3.1 where the number of candidates who put themselves forward for election as a Panel Member or Alternate for a Party Category is less than or equal to the number of Panel Member or Alternate offices attributable to that Party Category and currently vacant or due to become vacant on the following 1 December, the candidate or candidates who put themselves forward shall be deemed to have been elected as Panel Members for that Party Category; and

6.3.2 where the number of candidates who put themselves forward for election as a Panel Member or Alternate for a Party Category is more than the number of Panel Member or Alternate offices attributable to that Party Category and currently vacant or due to become vacant on the following 1 December, the candidates elected as a Panel Member or Alternate for that Party Category shall be those set out in the list referred to in Clause 6.2.7, starting with the candidate at the top of that list and ending at candidate n (where n is the relevant number of offices that are currently vacant or due to become vacant on the following 1 December); save that where a candidate has applied to be both a Panel Member and an Alternate, where that candidate is appointed as a Panel Member that candidate shall be removed from the list of possible Alternates.

6.4 Where the number of candidates who put themselves forward for election as a Panel Member or Alternate for a Party Category is less than (respectively) the number of Panel Member or Alternate offices attributable to that Party Category and currently vacant or due to become vacant on the following 1 December, the Panel Secretary shall request that the Authority make up that number by selecting further Panel Members or Alternates on behalf of that Party Category. Any such person as the Authority may direct shall be deemed to have been elected as a Panel Member or Alternate for the relevant Party Category from the date of such direction.

6.5 Not used.

Term of Office and Removal from Office of Panel Members

6.6 Each person elected as a Panel Member or Alternate shall be appointed as such with effect from the last to occur of the following:

6.6.1 the date on which that person complies with the requirements of Clause 6.17;

6.6.2 the date on which that person is elected; and

6.6.3 the date on which the position for which that person was elected becomes vacant.

6.7 Each Panel Member or Alternate (other than one appointed under Clause 5.8 or 6.9) shall retire (at which point their office shall become vacant) on 1 December in the second year following their appointment.

6.8 A Panel Member or Alternate shall immediately cease to be a Panel Member or Alternate (and their office shall become vacant) if that Panel Member or Alternate:

6.8.1 resigns from office by notice in writing to the Panel Secretary;

6.8.2 being a Panel Member, fails to attend three consecutive meetings of the Panel that have been duly convened; or, being an Alternate, fails to attend two consecutive meetings of the Panel which the Alternate was due to attend;

6.8.3 ceases to be, or to be employed by, a person that is:

A. a Party that forms part of the same Party Category as the Party Category in respect of which the Panel Member or Alternate was elected;

B. not a Party but that has an Affiliate that is a Party that forms part of the same Party Category as the Party Category in respect of which the Panel Member or Alternate was elected; or

C. not a Party and that has no Affiliate that is a Party but provides consultancy services to, or represents the interests of, the same Party Category as the Party Category in respect of which the Panel Member or Alternate was elected;

6.8.4 becomes bankrupt or makes any arrangement or composition with creditors;

6.8.5 becomes prohibited by law from being a director of a company under the Companies Act 2006;

6.8.6 is convicted of an indictable offence;

6.8.7 is admitted to hospital in pursuance of an application under the Mental Health Act 1983 or the Mental Health (Care and Treatment) (Scotland) Act 2003, or an order is made by a court with competent jurisdiction in matters concerning mental disorder for their detention or for the appointment of a receiver, curator bonis or other person with respect to their property or affairs; or

6.8.8 dies.

Replacement of Panel Members

6.9 Where the office of a Panel Member (other than one appointed under Clause 5.8) becomes vacant for any reason other than by retirement in accordance with Clause 6.7 or 6.10:

6.9.1 the Alternate:

A. allocated to that Panel Member (as described in Clause 6.11); or

B. if there is no such Alternate, any other Alternate in respect of the Party Category relevant to that office,

shall be appointed to that office. The appointment shall be subject to Clause 6.17, but as if the reference to “their election” in the final line thereof were to “the date upon which the relevant office became vacant”; or

6.9.2 where there is no Alternate in respect of the relevant Party Category, the election process set out in Clauses 6.2 to 6.5 (inclusive) shall apply in respect of that office, save that the dates and timescales set out therein shall be as the Panel Secretary may reasonably direct.

6.10 A Panel Member appointed in accordance with Clause 6.9 shall retire (at which point the office of that Panel Member shall become vacant) on the date that the person that Panel Member replaced would otherwise have retired in accordance with Clause 6.7.

Alternates

6.11 Each Alternate elected as described in Clause 6.3 shall be allocated to a Panel Member for the same Party Category by reference to the election in which the Panel Member and Alternate were elected (and, if relevant, the order in which they appeared on the list created under Clause 6.2.7).

6.12 Where a Panel Member is not present at a Panel meeting, that Panel Member's Alternate shall be entitled to attend (and count towards the quorum at) that meeting and to exercise and discharge all the functions, powers and duties of the Panel Member at that meeting.

6.13 Where a Panel Member is not present at a Panel meeting and that Panel Member's Alternate is not able to be present at a Panel meeting, another Alternate from the same Party Category shall be entitled to attend (and count towards the quorum at) that meeting and to exercise and discharge all the functions, powers and duties of the Panel Member at that meeting.

6.14 Where the office of an Alternate becomes vacant for any reason other than by way of retirement in accordance with Clause 6.7 (including where the Alternate becomes a Panel Member in accordance with Clause 6.9), then the election process set out in Clauses 6.2 to 6.5 (inclusive) shall apply in respect of that office, save that the dates and timescales set out therein shall be as the Panel Secretary may reasonably direct.

6.15 Unless the context otherwise requires, any reference in this Agreement to a Panel Member shall be construed as including a reference to that Panel Member's Alternate.

Duties of Panel Members

6.16 A person appointed as Panel Member (including Alternates acting as Panel Members), when acting in that capacity, shall:

6.16.1 act independently, not as a delegate, and without undue regard to the interests, of any Related Person;

6.16.2 exercise reasonable skill and care to the standard reasonably expected of a director of a company under the Companies Act 2006; and

6.16.3 act in a manner designed to facilitate the performance by the Panel of its duties under this Agreement.

6.17 A person shall not be appointed as a Panel Member or Alternate unless that person has first:

6.17.1 confirmed in writing to DCUSA Ltd (for the benefit of itself and each Party) that they agree to act as a Panel Member in accordance with this Agreement and with particular regard to the requirements of Clause 6.16; and

6.17.2 confirmed in writing to DCUSA Ltd (for the benefit of itself and each Party) that they agree to accept appointment as a director of DCUSA Ltd and to act in such capacity in accordance with this Agreement,

and their office shall be deemed to have become vacant if they do does not do so within 20 Working Days of their election.

6.18 Each Panel Member or Alternate shall, at the time of their appointment and upon any relevant change in circumstance, disclose, in writing to the Panel, the name of each Related Person who is a Party, or is otherwise likely to be affected by the operation of this Agreement and the matters to which it relates.

6.19 Where a Panel Member or Alternate changes employer, the Panel Member or Alternate shall, as soon as reasonably practicable after such change, notify the Panel Secretary of such change in writing. The Panel

Secretary shall then notify the Parties of the change in question.

Protections for Panel Members and Others

6.20 Each Party shall, jointly and severally with each other Party, indemnify, and keep indemnified:

6.20.1 each Panel Member (whether as a Panel Member or as a director of DCUSA Ltd);

6.20.2 each Alternate (whether acting as a Panel Member or as a director of DCUSA Ltd);

6.20.3 the Panel Secretary (whether as Panel Secretary or as the company secretary of DCUSA Ltd);

6.20.4 each person who serves on a Working Group;

6.20.5 any employee of a Party, or of an Affiliate of a Party, who is seconded to (or otherwise providing services to) the Secretariat; and

6.20.6 each Party, or an Affiliate of a Party, as employer of any person referred to in Clauses 6.20.1 to 6.20.4 (inclusive),

from and against any and all costs (including legal costs), charges, expenses, damages or other liabilities properly incurred or suffered by that person or Party in relation to the exercise of the person's powers, duties or responsibilities under this Agreement, including where such powers duties or responsibilities are exercised negligently (and, for the avoidance of doubt, such indemnity shall extend to the persons who acted as directors of DCUSA Ltd in the period prior to the date on which this Agreement became effective).

6.21 The indemnity set out in Clause 6.20 shall not apply to any costs, charges, expenses, damages or other liabilities that are:

6.21.1 recovered in accordance with the procedures set out in Clause 8;

6.21.2 in respect of any charge for the time of those persons referred to in Clause 6.20;

6.21.3 recovered under any policy of insurance in favour of any or all of the persons and Parties referred to in Clause 6.20; or

6.21.4 suffered or incurred or occasioned by the wilful default or bad faith of, or breach of contract by, the relevant person.

6.22 DCUSA Ltd shall hold the benefit of Clause 6.20 (subject to Clause 6.21) as trustee and agent for each person (other than a Party) referred to in Clause 6.20.

6.23 As between themselves, each of the Parties shall be liable, in respect of any amounts properly payable by any Party under Clause 6.20, in accordance with the same proportions as are used to calculate that Party's Cost Contribution under Clause 8 (calculated on the basis of Metering Point registrations in the month in which the cost, charge, expense, damage or other liability referred to in Clause 6.20 was incurred).

7. OPERATION OF THE PANEL

The Panel Chair

7.1 The **Panel Chair** shall be the Panel Member appointed as such, from time to time, by a simple majority of the Panel Members.

7.2 The Panel Chair may at any time be removed from the office of Panel Chair by a simple majority of the Panel Members or at the direction of the Authority. Where a Panel Member is removed from the office of Panel Chair, that Panel Member may not be reappointed as such without the Authority's prior consent.

7.3 The Panel Chair shall preside at every meeting of the Panel at which they are present. If the Panel Chair is unable to be present at a meeting, the Panel Chair may nominate, by notice in writing to the Panel Secretary, another Panel Member (or the Alternate of that Panel Member) to act as Panel Chair for that meeting. If neither the Panel Chair nor any person nominated by the Panel Chair in accordance with this Clause 7.3 is present at a Panel meeting, the Panel Members present may, by simple majority, appoint any one of their number to preside at that meeting.

7.4 The Panel Chair shall be entitled to vote in their capacity as a Panel Member, and shall in no circumstances be entitled to an extra or casting vote.

The Panel Secretary

7.5 The Panel Secretary shall be appointed, or removed from office, by the Panel. In no event shall the Panel Secretary be an employee of any Party or any of its Affiliates.

7.6 The Panel Secretary shall be entitled to attend and speak (but not to vote) at Panel meetings.

7.7 The Panel Secretary's duties shall be to facilitate the operations of the Panel and in particular to:

7.7.1 attend to the requisition of meetings and serve the necessary notices;

7.7.2 maintain a register of names and addresses, from time to time, of the Panel Members, and of the Alternates allocated to each Panel Member;

7.7.3 keep minutes of all meetings; and

7.7.4 circulate all relevant notices, papers and minutes.

7.8 The Panel shall be responsible for ensuring that the Panel Secretary undertakes these duties.

Meetings of the Panel

7.9 The Panel shall hold meetings at such times as it may decide but in any event shall meet at least once every three months. The venues for meetings shall be determined by the Panel Members.

7.10 No business shall be transacted at any meeting of the Panel unless a quorum is present at that meeting. The quorum for each Panel meeting shall be four Panel Members, at least one of whom must have been elected by the DNO Parties and at least one of whom must have been elected by the Supplier Parties.

7.11 The Panel may, subject to the other provisions of this Agreement, regulate the conduct of its meetings as it sees fit.

7.12 Any Panel Member may, by written notice to the Panel Secretary:

7.12.1 request the requisition of an additional Panel meeting. Any such notice given to the Panel Secretary must contain a list of matters to be included in the agenda for the meeting. Following receipt of such a notice, the Panel Secretary shall proceed to convene the meeting within five Working Days; and

7.12.2 request the consideration of additional matters at a meeting for which notice has already been given. Provided such notice is given at least three Working Days before the date of the relevant meeting, the Panel Secretary shall amend the agenda for that meeting to include the additional matters.

7.13 Nothing shall prevent a meeting from being held by telephone or other technological means, so long as all the criteria regarding notice and minutes are met.

Notice of Meetings

7.14 All meetings of the Panel shall be convened by the Panel Secretary on at least five Working Days'notice (subject to any requirements, under Section 1C, for meetings to be held within a shorter period). Such notice (which may be given by e-mail) must be given to:

7.14.1 the Panel Members and the Alternates;

7.14.2 the appointed persons referred to in Clause 5.7;

7.14.3 (where the Panel has resolved to invite representatives of one or more of them) one or more (as applicable) of BSCCo, RECCo and/or SECCo; and

7.14.4 the Parties.

7.15 The notice of each Panel meeting shall contain the time, date and venue of, and an agenda and any supporting papers for, the relevant meeting. The Panel Secretary shall circulate amendments to the agenda where necessary.

7.16 The accidental omission to give notice of a meeting to, or the non-receipt of notice of a Panel meeting by, a person entitled to receive notice shall not invalidate the proceedings of that meeting.

Representation and Voting

7.17 Each Panel Member shall be entitled to attend, and to speak and vote at, every meeting of the Panel.

7.18 Any Party shall be entitled to send a representative to attend a Panel meeting provided it gives the Panel Secretary two Working Days' notice in advance of such meeting. Such a representative shall be admitted as an observer, and shall (at the Panel Chair's invitation) be entitled to speak (but in no circumstances vote) at the meeting. The Panel Chair may, at their sole discretion, exclude a representative of a Party from a meeting (or any part thereof) where matters being discussed are confidential.

7.19 All decisions of the Panel shall be by resolution. In order for a resolution of the Panel to be passed at a meeting, a simple majority of those Panel Members present at that meeting must vote in favour of that resolution.

7.20 A resolution in writing signed by or on behalf of all the Panel Members shall be as valid and effective as if it had been passed at a meeting of the Panel duly convened and held. Such a resolution may be signed in any number of counterparts.

Minutes of Panel Meetings

7.21 The Panel Secretary shall, as soon as practicable (and in any event within five Working Days) following each Panel meeting, circulate copies of the minutes of that meeting to each person who was entitled to receive a notice of that meeting.

7.22 If any Panel Member disagrees with any item of the minutes, the Panel Member shall, within five Working Days of receipt of the minutes, notify the Panel Secretary of those items with which the Panel Member disagrees, and the Panel Secretary shall incorporate those items upon which there is disagreement into the agenda for the next following meeting of the Panel, as the first item for resolution.

7.23 The Panel Secretary shall maintain a record of all resolutions voted on by the Panel, indicating how each Panel Member voted on each resolution, and shall make such record available on request to any Party.

Establishing Working Groups

7.24 The Panel may establish sub-committees (each a Working Group) for the purposes of doing, or assisting the Panel in doing, anything to be done by the Panel pursuant to this Agreement. The Panel may dissolve any Working Group it has previously established. In particular, the Panel may establish, dissolve and subsequently re-establish either or both of the DCUSA Standing Issues Group and the DCMDG.

7.25 The Panel may delegate to each Working Group such of the Panel's duties, powers and functions under this Agreement as the Panel may specify.

7.26 Each Working Group shall be subject to such written terms of reference and such written procedures as the Panel may specify from time to time; save that the terms of reference for the DCUSA Standing Issues Group and the DCMDG must be consistent with the terms of reference and procedures given in Schedule 7 and Schedule 28 (respectively). Subject to the applicable terms of reference and procedures, each Working Group shall otherwise conduct its business as it sees fit. No Working Group may further delegate any of its duties, powers and functions unless expressly authorised to do so by such terms of reference.

7.27 Each Working Group shall publish, on the Website, details of that Working Group's:

7.27.1 membership;

7.27.2 terms of reference;

7.27.3 timetable for business and meetings;

7.27.4 minutes of meetings; and

7.27.5 governance procedures.

Membership of Working Groups

7.28 Each Working Group shall be composed of such persons with experience and expertise suitable to the Working Group's remit, and who are willing to serve, as the Panel may direct. Each Working Group shall be chaired by such person (the WG Chair) as the Panel may direct, or as (in the case of the DCUSA Standing

Issues Group) is elected pursuant to Schedule 7 or (in the case of the DCMDG) is appointed pursuant to Schedule 28.

7.29 Before establishing each Working Group, the Panel shall invite (by such means as it considers appropriate) applications from individuals who wish to serve on that Working Group.

7.30 Once a Working Group is established, the WG Chair shall (unless the Panel otherwise directs) be entitled to admit such additional persons to serve on that Working Group as the WG Chair considers appropriate. The Panel may, at its discretion, subsequently remove any such additional persons from service on that Working Group.

7.31 The Authority shall be entitled to send, to any Working Group meeting, a representative who shall be entitled to speak (but not to vote) at that meeting. Any Party shall be entitled to send a representative to attend and (at the WG Chair's invitation) speak (but in no circumstances vote) at any Working Group meeting.

Duties of those Serving on Working Groups

7.32 Each Working Group shall act in a manner designed to achieve the Panel Objectives.

7.33 Those persons serving on a Working Group from time to time, when acting in that capacity, shall:

7.33.1 act independently, not as a delegate, and without undue regard to the interests, of any Related Person (save that this requirement shall not apply to those serving on the DCMDG);

7.33.2 exercise reasonable skill and care to the standard reasonably expected of a director of a company under the Companies Act 2006 (save that this requirement shall not apply to those serving on the DCMDG); and

7.33.3 act in a manner designed to facilitate the performance by the Working Group of the duties delegated to it.

7.34 Unless the Panel otherwise directs, a person who is to serve on a Working Group shall not be appointed to that Working Group unless that person has first confirmed in writing to DCUSA Ltd (for the benefit of itself and each Party) that they agree to act in accordance with Clause 7.33 (save that this requirement shall not apply to those serving on the DCMDG).

Decisions of Working Groups

7.35 Resolutions of Working Groups shall not have binding effect unless the Panel has formally delegated the decision-making powers to the Working Group or has ratified the resolution in question.

Secretariat

7.36 The Panel may, from time to time, appoint and remove, or make arrangements for the appointment and removal of, any such person or persons (such person or persons to be known as the **Secretariat**) as the Panel requires to assist:

7.36.1 the Panel;

7.36.2 the Panel Secretary; and/or

7.36.3 any Working Group,

in the proper performance of its or their duties and responsibilities under this Agreement.

7.36A The Secretariat shall perform the role of code administrator in respect of this Agreement. Accordingly, the Secretariat shall (in addition to any other roles allocated to it under this Agreement):

7.36A.1 from time to time, together with other code administrators, publish, review and (where appropriate) report to the Panel and the Authority on any proposed amendments to the Code Administration Code of Practice;

7.36A.2 where the Authority approves any proposed amendments to the Code Administration Code of Practice, working together with other code administrators, amend the Code Administration Code of Practice in accordance with such approval;

7.36A.3 periodically review and report to the Panel on whether the provisions of this Agreement are consistent with the Code Administration Code of Practice (to the extent relevant);

7.36A.4 have regard to, and (to the extent relevant) act in a manner consistent with, the principles contained in the Code Administration Code of Practice; and

7.36A.5 provide assistance (insofar as is reasonably practicable and on reasonable request) to Parties (including, in particular, Small Participants) and (to the extent relevant) consumer representatives that request the Secretariat's assistance in relation to this Agreement; such assistance to include assistance with:

A drafting Change Proposals;

B understanding the operation of this Agreement;

C their involvement in, and representation during, the Change Proposal processes (including in respect of Panel or Working Group meetings); and

D accessing information relating to Change Proposals.

7.37 The Panel shall be responsible for ensuring that the Secretariat undertakes any responsibilities and duties that are either assigned to it under Clause 7.36 or ascribed to it in this Agreement. In particular, the Panel shall ensure that the arrangements under which the Secretariat is appointed shall oblige the Secretariat to undertake such duties and responsibilities on the same applicable terms as are provided for under this Agreement.

7.38 Subject to Clause 7.37 any appointment by the Panel under Clause 7.36 shall be on such terms and conditions and in return for such remuneration as the Panel sees fit.

7.39 In no event shall the Secretariat be a Party, an Affiliate of a Party, an employee of a Party, or an employee of an Affiliate of a Party.

DCUSA Ltd

7.40 The provisions of Schedule 10 shall apply in respect of DCUSA Ltd.

7.41 The Panel is deemed to have approved all the acts of DCUSA Ltd undertaken before this Agreement became effective, and the Parties hereby confirm that such approval is properly given.

Market-wide Half-Hourly Settlement Implementation

7.42 DCUSA Ltd shall (and the Panel shall ensure that DCUSA Ltd shall) comply with the obligations expressed to apply to DCUSA Ltd (either specifically or generically as a category of participant) under section C12 (Market-wide Half-Hourly Settlement Implementation) of the Balancing and Settlement Code.

8. COSTS OF THE DCUSA

Recovery of Costs

8.1 The Panel shall be entitled to recover, in accordance with the procedures set out in this Clause 8, all the reasonable costs and expenses properly incurred by:

8.1.1 the Panel;

8.1.2 the Panel Secretary;

8.1.3 any Working Group;

8.1.4 the Secretariat; and

8.1.5 DCUSA Ltd,

in performing their respective duties, powers and functions under this Agreement (the Recoverable Costs), which may include their general administration costs and expenses, any costs and expenses they incur in holding, or travelling to, meetings, any costs and expenses of any professional advisers properly retained by them, and any tax payable by DCUSA Ltd. Recoverable Costs shall not include any payment to Panel Members, to directors of DCUSA Ltd or to those who serve on Working Groups in respect of their time.

Preparation of Draft Budgets

8.2 In respect of:

8.2.1 the Financial Year ending on 31 March 2007, the Panel shall, as soon as reasonably practicable following the date on which this Agreement becomes effective; and

8.2.2 each subsequent Financial Year, the Panel shall (not earlier than 60, nor later than 30, Working Days before the commencement of that Financial Year), prepare, circulate to all the Parties, and invite comments on, a draft budget for that Financial Year (a Draft Budget).

Each Draft Budget shall be accompanied by a detailed work plan showing the activities and projects to which the relevant costs and expenses relate, and shall set out the Panel's good-faith estimate of the Recoverable Costs that it anticipates will either be

8.3 Each Draft Budget shall be accompanied by a detailed work plan showing the activities and projects to which the relevant costs and expenses relate, and shall set out the Panel's good-faith estimate of the Recoverable Costs that it anticipates will either be:

8.3.1 incurred in the Financial Year to which the Draft Budget relates; or

8.3.2 committed to in the Financial Year to which the Draft Budget relates, even though the Recoverable Costs are not expected to be incurred until a subsequent Financial Year.

8.3A The Draft Budget shall separately identify the Panel's good-faith estimate of the Recoverable Costs that it anticipates will be invoiced in each Quarter of the Financial Year to which the Draft Budget relates, split between each Party Category.

8.3B The Draft Budget for a Financial Year shall be accompanied by the Panel's latest estimate of the likely outcome of the annual review for the previous Financial Year, which will be carried out pursuant to Clause 8.12.

8.3C The Draft Budget for a Financial Year shall be accompanied by the Panel's best estimate of the dates on which it will raise invoices for each Quarter of the Financial Year.

Approval of Budgets

8.4 The Draft Budget for the Financial Year ending on 31 March 2007 shall, on its preparation, automatically become the Approved Budget for that Financial Year. The Panel shall, nevertheless, consider any comments received from the Parties in the 20 Working Days following its circulation, and the Panel shall, where it considers it appropriate to do so, amend such Approved Budget in the light of those comments.

8.5 In respect of the Draft Budget for each subsequent Financial Year, the Panel shall:

8.5.1 arrange for publication on the Website of all of the comments received from the Parties regarding the Draft Budget and/or the accompanying work plan in the 20 Working Days following their circulation;

8.5.2 consider, and (where it considers it appropriate to do so) respond to, those comments;

8.5.3 to the extent that it considers it appropriate to do so, amend the Draft Budget and/or the accompanying work plan in the light of those comments; and

8.5.4 no less than 20 Working Days following such circulation, approve the Draft Budget (as so amended) as the Approved Budget for the relevant Financial Year.

Amendments to Budgets

8.6 The Approved Budget relating to each Financial Year may be amended by the Panel from time to time, provided that the Panel has first:

8.6.1 circulated and invited comments on the proposed amendments in accordance with Clause 8.2 as if it were a Draft Budget; and

8.6.2 published and considered any comments received on the proposed amendments within 20 Working Days of such circulation on the same basis as is referred to in Clause 8.5.

Payment of Costs Incurred

8.7 Where the Panel, the Panel Secretary, any Working Group, the Secretariat or DCUSA Ltd wishes to recover any cost or expense under this Clause 8, details of the cost or expense in question shall be submitted to the Panel (or a named person approved by the Panel) for approval. Such cost or expense shall only be approved to the extent that it falls within a category of Recoverable Cost provided for in an Approved Budget, and only if such cost or expense:

8.7.1 will not (in aggregate with those costs and expenses previously approved for the Financial Year, and those likely to be approved for the remainder of the Financial Year) cause the total Approved Budget to be exceeded to a material extent; and

8.7.2 is submitted in a timely manner (and in any event on or before the 20th Working Day following the end of the relevant Financial Year).

Once approved, details of the cost or expense shall be submitted to the Secretariat or DCUSA Ltd (as directed by the Panel or such named person) for payment.

8.8 Upon receipt of an invoice or other statement relating to costs or expenses that have been approved in accordance with Clause 8.7, the Secretariat or DCUSA Ltd (as applicable) shall pay the amount stated in such invoice or other statement (together with VAT thereon, if applicable) to the person named in such invoice or other statement.

Share of Costs

8.9 The amount (a Cost Contribution) that each Party shall be obliged to bear as its share of the Recoverable Costs, in respect of each Quarter:

8.9.1 in the case of each CVA Registrant (in its capacity as such), the OTSO Party, each Gas Supplier Party (in its capacity as such), the Crowded Meter Room Coordinator and each SIP Party (in its capacity as such), shall be zero; and

8.9.2 in the case of each other Party, shall be calculated as follows:

$$\mathrm{CC} = 50\% \times \frac{\mathrm{N}}{\mathrm{TN}} \times \mathrm{RC}$$

where:

CC is the relevant Party's Cost Contribution in respect of that Quarter;

N is, in respect of a DNO Party or an IDNO Party, the aggregate number of Metering Points which each such Party has on its network, as recorded in the Supplier Meter Registration Service; and, in respect of a Supplier Party, the aggregate number of Metering Points against which that Party is registered across all of the Supplier Meter Registration Service (based, in each case, on the average figure for the three months comprising that Quarter and provided to DCUSA Ltd under BSCP501 and (for MHHS) under BSCP711);

TN is, in respect of each Party and that Quarter, the aggregate number of Metering Points across all of the Supplier Meter Registration Service (based on the average aggregate figure for the three months comprising that Quarter and provided to DCUSA Ltd under BSCP501 and (for MHHS) under BSCP711); and

RC is the total amount of the Recoverable Costs incurred, or otherwise accounted for, in that Quarter.

Recovery of Budgeted Costs

8.10 The Panel shall, in respect of each Party and within 7 days after the start of each Quarter:

8.10.1 calculate the Panel's best estimate (by reference to the Approved Budget) of that Party's Cost Contribution (together with VAT thereon, if applicable) in respect of that Quarter; and

8.10.2 arrange for an invoice or other statement, on such terms as the Panel may from time to time prescribe, for an amount equal to such estimate to be sent to that Party. Such invoices shall be sent by post, by email, or by post and email, as specified by the receiving Party from time to time (or, where no preference has been specified, by post only). Such invoices shall ordinarily be payable within 30 days.

8.11 Each Party shall, on receipt of an invoice or other statement submitted under Clause 8.10, pay the amount requested of it in accordance with (and within the time period prescribed by) the terms referred to in Clause 8.10.

8.11A Failure by a Party to pay (in cleared funds) an amount in accordance with Clause 8.11 shall be a "DCUSA Payment Default".

8.11B Where a Party commits a DCUSA Payment Default, the Panel shall send a notice (a "DCUSA Late Payment Notice") to the Party:

8.11B.1 setting out the amount owed by the Party;

8.11B.2 stating to whom payment should be made;

8.11B.3 specifying that the payment must be made by a method of same day payment, such as CHAPS; and

8.11B.4 stating that failure to pay may lead to an Event of Default under this Agreement.

8.11C Failure by a Party to remedy a DCUSA Payment Default may give rise to an Event of Default under and in accordance with Clause 54.1, and may lead to the Panel suspending a Supplier Party's rights in accordance with Clause 54.2.

Annual Reconciliation of Costs

8.12 Within 40 Working Days following the end of each Financial Year, the Panel shall calculate each Party's actual Cost Contribution in respect of each Quarter of that Financial Year, and shall reconcile the actual amounts against the amounts paid (or payable) by that Party in accordance with Clause 8.11.

8.13 Where, in respect of a Financial Year and any Party, the aggregate amount paid in accordance with Clause 8.11:

8.13.1 is greater than the aggregate amount calculated in accordance with Clause 8.12, the Panel shall arrange for that Party to be reimbursed with the difference by means of either (at the Panel's discretion but so that each Party to be reimbursed in respect of a Financial Year is reimbursed by the same means):

A. a cheque payment prior to the next invoice to be raised pursuant to Clause 8.10; or

B. a credit against the next invoice to be raised pursuant to Clause 8.10; or

8.13.2 is less than the aggregate amount calculated in accordance with Clause 8.12, the Panel shall arrange for the difference to be added to the next invoice raised pursuant to Clause 8.10.

Interest

8.14 The Panel shall be entitled, without prejudice to any other right or remedy, to charge (and where charged, a Party shall pay) interest on any payment not duly made in accordance with Clause 8.11, calculated from day to day at a rate per annum equal to the Default Interest Rate from the day after the date on which payment was due up to and including the date of payment, together with an administration charge as notified by the Panel to the Parties from time to time.

Audit

8.15 The Panel shall arrange for the costs and expenses recovered under this Clause 8 to be audited by a firm of chartered accountants on an annual basis in order to verify that all such costs and expenses were Recoverable Costs provided for in an Approved Budget.

8.16 The Panel shall copy the auditor's report to all Parties within 15 Working Days of receipt.

SECTION 1.C - CHANGE CONTROL

9. CHANGE CONTROL

9.1 The purpose of this Section 1C is to make provision for the terms and conditions of this Agreement to be varied. This Section 1C also contains provisions for amending DCUSA Messages.

9.2 No variation of this Agreement or a DCUSA Message may be made or may have effect unless it is made in accordance with the provisions of this Section 1C.

9.3 For the purposes of this Section, all actual or potential provisions of this Agreement shall be deemed to have the status of either a Part 1 Matter or a Part 2 Matter.

Part 1 Matters

9.4 Any actual or potential provision of this Agreement shall be deemed to have the status of a Part 1 Matter to the extent that it satisfies one or more of the following criteria:

9.4.1 it is likely to have a significant impact on the interests of electricity consumers;

9.4.2 it is likely to have a significant impact on competition in one or more of:

A. the generation of electricity;

B. the distribution of electricity;

C. the supply of electricity; and

D. any commercial activities connected with the generation, distribution or supply of electricity;

9.4.3 it is likely to discriminate in its effects between one Party (or class of Parties) and another Party (or class of Parties);

9.4.4 it is directly related to the safety or security of the Distribution Network; and

9.4.5 it concerns the governance or the change control arrangements applying to this Agreement; and

9.4.6 it has been raised pursuant to Clause 10.2.5, and/or the Authority has made one or more directions in relation to it in accordance with Clause 11.9A.

Part 2 Matters

9.5 Any actual or potential provision of this Agreement which does not satisfy one or more of the criteria set out at Clause 9.4 shall be deemed to have the status of a Part 2 Matter.

Guidelines

9.6 The Panel shall produce such documents (if any) as it considers appropriate to provide guidance to the Parties in relation to the process set out in this Section 1C, and shall publish any such documents on the Website. Such documents shall be for guidance only and shall not affect the interpretation of this Agreement.

10. CHANGE PROPOSALS

10.1 Each variation of this Agreement and/or DCUSA Message must commence with a proposal made in accordance with the provisions of this Clause 10 (a Change Proposal).

Persons Entitled to Propose

10.2 A Change Proposal may be made by any of the following:

10.2.1 a Party (excluding the Crowded Meter Room Coordinator), save that SIP Parties may only raise Change Proposals in respect of Section 2H;

10.2.2 the Consumer Body;

10.2.3 the Independent System Operator and Planner;

10.2.4 any person or body that may from time to time be designated in writing by the Authority for the purpose of this Clause 10.2 (which may include, in respect of a Charging Methodology, any person whose interests are materially affected by that Charging Methodology);

10.2.5 the Authority or a DNO/IDNO Party acting at the direction of the Authority (in each case only in relation to Authority Change Proposals), or the Secretariat acting at the direction of the Authority; and

10.2.6 the Secretariat, raised on behalf of industry with the express approval of the DCUSA Standing Issues Group or Distribution Charging Methodologies Development Group, pursuant to Clause 10.2A.

10.2A Prior to raising a Change Proposal under Clause 10.2.6, the Secretariat must follow the following process:

10.2A.1 the Secretariat must first raise the issue which it has identified as potentially needing a Change Proposal at the DCUSA Standing Issues Group or (if the issue relates to the Charging Methodologies) the Distribution Charging Methodologies Development Group for discussion of the issue and potential solution; and

10.2A.2 the Secretariat may only raise a Change Proposal with the express approval of the DCUSA Standing Issues Group or the Distribution Charging Methodologies Development Group (as further described in Clause 10.2A.3);

10.2A.3 in order for express approval to be given, there must be an open ballot vote of the Groups represented at the meeting, and: (A) the quorum for the vote must include representatives from at least four different Groups, at least one of whom must represent either a DNO Party or an IDNO Party and at least one of whom must represent a Supplier Party; and (B) a simple majority of the Groups represented at the meeting must vote in favour of approval being given (one vote per Group); and

10.2B If the Secretariat wishes, in its role as the Proposer, to change the proposed solution (other than one which is considered minor by the Working Group) or to withdraw the Change Proposal, then the Secretariat must seek the approval of either:

10.2B.1 (in the case of a Change Proposal raised under Clause 10.2.5) the Authority; or

10.2B.2 (in the case of a Change Proposal raised under Clause 10.2.6) the DCUSA Standing Issues Group or Distribution Charging Methodologies Development Group (as applicable), on the same basis as described in Clause 10.2A.3.

Form and Content of the Proposal

10.3 A Change Proposal must be submitted in writing by the person making the Proposal (the Proposer) to the Secretariat.

10.4 A Change Proposal must contain the following information:

10.4.1 the name of the Proposer;

10.4.2 the name and contact details of an employee or representative of the Proposer who will act as a principal point of contact in relation to the proposal;

10.4.3 the date on which the proposal is submitted;

10.4.4 a description in sufficient detail of the nature of the proposed variation to the Agreement and/or DCUSA Message and of its intended purpose and effect;

10.4.5 a statement of the reasons why the Proposer believes that this Agreement and/or DCUSA Message would, if the proposed variation were made, better facilitate the achievement of the DCUSA Objectives than if that variation were not made;

10.4.5A a statement of whether the Proposer believes that there would be a material impact on greenhouse gas emissions as a result of the proposed variation being made;

10.4.6 a statement as to which parts of the Agreement and/or DCUSA Message the Proposer considers would require to be changed in order to give effect to the proposed variation or as a consequence of that variation;

10.4.7 a statement of whether, in the opinion of the Proposer, the proposed variation relates to a Part 1 Matter or a Part 2 Matter;

10.4.8 a statement of whether the Proposer considers, in the light of the criteria set out in Clause 10.7, that the Change Proposal should be treated as urgent and, if so, its reasons for so considering;

10.4.9 the date from which the Proposer recommends that the proposed variation should have effect;

10.4.10 in the case of variations proposed by DNO/IDNO Parties, confirmation as to whether it is raising the proposal in compliance with a direction of the Authority as envisaged by Clause 10.2.5; and

10.4.11 an assessment by the Proposer of the Change Proposal against the Prioritisation Criteria.

10.5 The Panel may from time to time publish a standard form of Change Proposal to be used by a Proposer. Any such standard form must require the provision by the Proposer of all of the information listed at Clause 10.4, but may also require it to provide such further information as the Panel may reasonably specify. The Panel shall ensure that the latest version of any standard form of Change Proposal is made available on the Website.

10.6 Where a standard form of Change Proposal has been published under Clause 10.5, a Proposer must submit its Change Proposal in accordance with that standard form.

Criteria for Urgent Change Proposals

10.7 A Change Proposal should be treated as urgent if it relates to a current or imminent issue that if not urgently addressed may cause:

10.7.1 significant adverse commercial impact upon the Parties (or a class of Party), electricity consumers and/or any other person;

10.7.2 significant adverse impact on the safety and security of the Distribution Network; or

10.7.3 one or more Parties to be in breach of the Relevant Instruments or other law.

Refusal by the Secretariat

10.8 The Secretariat may refuse to accept the submission of any Change Proposal that does not contain all of the information listed at Clause 10.4 or is not made in accordance with any standard form that has been published by the Panel.

10.9 Where the Secretariat refuses to accept the submission of a Change Proposal, it shall:

10.9.1 notify the Proposer of that refusal as soon as is reasonably practicable, specifying the reason for such refusal; and

10.9.2 notify the Panel of that refusal at the next Panel meeting.

10.10 Where the Panel is notified that the Secretariat has refused to accept the submission of a Change Proposal, it may decide to instruct the Secretariat to accept the submission of that proposal, in which case the proposal shall be treated with effect from the time of the decision as if it had been referred to the Panel under Clause 10.11.

Initial Assessment

10.11 Except where the Secretariat refuses to accept the submission of a Change Proposal, it shall:

10.11.1 refer that proposal to the Panel;

10.11.2 (without altering the Change Proposal in any way and without undertaking any detailed evaluation of the Change Proposal) prepare an initial written assessment of the likely effect of the proposal for the assistance of the Panel; and

10.11.3 suggest a timetable to apply if the Panel chooses to place the proposal into the Assessment Process.

10.12 The Panel shall consider the Change Proposal and the accompanying documents referred to in Clause 10.11.2:

10.12.1 in respect of Change Proposals specified as urgent in accordance with Clause 10.4.8, within five Working Days of the proposal's submission (and, if necessary, the Panel Secretary shall convene a Panel meeting for such purpose); or

10.12.2 in respect of all other Change Proposals, if received at least eight Working Days before the next scheduled routine Panel meeting, at the next scheduled routine Panel meeting, or else at the following scheduled routine Panel meeting,

and, at such meeting the Panel shall consider whether to accept or refuse the Change Proposal, and whether or not the Change Proposal should, in light of the criteria set out in Clause 10.7, properly be treated as urgent. Only Change Proposals that the Panel considers should be treated as urgent shall be treated as Urgent Change Proposals. For the avoidance of doubt, the Panel shall not determine a Prioritisation Category for Urgent Change Proposals and accordingly no Urgent Change Proposal shall have a Prioritisation Category. For every Change Proposal that is not treated as an Urgent Change Proposal, the Panel shall determine the Prioritisation Category of that Change Proposal by assessing it against the Prioritisation Criteria (as compared with other Change Proposals) and taking into consideration the assessment presented by the Proposer in accordance with Clause 10.4.11.

Refusal by the Panel

10.13 Subject to Clause 10.14A, the Panel may choose to refuse the referral of a Change Proposal by the Secretariat if that proposal has substantively the same effect as another Change Proposal which was submitted by a Proposer on an earlier date and:

10.13.1 which has been neither accepted nor rejected in accordance with the provisions of this Section 1C at the time of the Panel meeting; or

10.13.2 which was rejected in accordance with the provisions of this Section 1C on a date that falls within the period of two months that immediately precedes the date of the Panel meeting.

10.14 Subject to Clause 10.14A, the Panel may choose to refuse the referral of a Change Proposal by the Secretariat if in its opinion the content of the proposed variation of the Agreement is outside the scope of the Agreement and/or DCUSA Message as set out at Condition 22 (as supplemented by Condition 22A) of the Distribution Licences.

10.14A The Panel may not refuse a Change Proposal submitted pursuant to Clause 10.2.5.

10.15 Where the Panel refuses the referral of a Change Proposal, the Secretariat shall notify the Proposer of that refusal as soon as is reasonably practicable, and shall publish details of the Change Proposal in question and the Panel's reasons for such rejection on the Website.

10.16 Nothing in this Clause 10 shall prevent the Proposer of a Change Proposal that is refused by the Secretariat or by the Panel from submitting a subsequent Change Proposal in relation to the same subject matter, and any such subsequent proposal shall be treated for the purposes of this Clause 10 as a new Change Proposal.

10.17 Where a Change Proposal is referred to the Panel, and where the Panel has not refused to accept the referral of that proposal, the Panel shall ensure that the proposal is placed into the Assessment Process in accordance with Clause 11.

Referral to the Authority

10.18 If the Panel refuses to accept the referral of a Change Proposal pursuant to Clause 10.13 or 10.14, the Proposer may ask the Authority to direct the Panel to accept the referral of that proposal.

10.19 Such a request by a Proposer may only be made within 10 Working Days of the Proposer being notified by the Secretariat of the Panel's refusal to accept the referral of the Change Proposal.

10.20 Such a request by a Proposer must:

10.20.1 be made in writing;

10.20.2 be accompanied by a copy of the Change Proposal;

10.20.3 (in the case of a refusal under Clause 10.13) state the reasons why the Proposer believes that the Panel was wrong to conclude that the proposed variation has substantively the same effect as another proposal;

10.20.4 (in the case of a refusal under Clause 10.14) state the reasons why the Proposer believes that the Panel was wrong to conclude that the content of the proposed variation was outside the scope of the Agreement; and

10.20.5 be copied to the Panel and to the Secretariat.

10.21 If the Authority, within 10 Working Days of receiving a request by a Proposer (and after having consulted with any persons and had regard to any information that it thinks fit), directs the Panel to accept the referral of the Change Proposal, the Panel shall comply with that direction and ensure that the Change Proposal is placed into the Assessment Process in accordance with Clause 11.

10.22 In addition to the right of the Panel to refuse the referral of a Change Proposal under Clause 10.13 or 10.14, the Panel shall refuse the referral of a Change Proposal that it considers to fall within the scope of a Significant Code Review and that is submitted during the relevant Significant Code Review Phase, unless the Authority otherwise directs (including where the Authority determines that the referral of the Change Proposal may be accepted, having taken into account (among other things) the urgency of the subject matter of the proposal).

10.23 Where a Change Proposal is submitted during a Significant Code Review Phase, the Panel shall:

10.23.1 unless the Authority gives notice otherwise, notify the Authority as soon as practicable of:

A. any representations received in relation to the relevance of the Significant Code Review to the proposal; and
B. the Panel's assessment of whether the proposal falls within the scope of the Significant Code Review and its reasons for that assessment; and

10.23.2 comply with any direction of the Authority stating that the Change Proposal should be treated as falling:

A. within the scope of the Significant Code Review, in which case the referral of the Change Proposal shall be rejected (or its progress suspended if its referral was previously accepted); or
B. outside the scope of the Significant Code Review, in which case the referral of the Change Proposal shall be accepted.

Cross Code Steering Group

10.24 The Panel shall from time to time nominate to the REC Code Manager one or more representatives to sit on the Cross Code Steering Group. The Panel shall ensure that each of the nominated individuals has the

appropriate skills, knowledge and experience to participate in accordance with the Cross Code Steering Group's terms of reference, and that they do actively in their role as part of the Cross Code Steering Group.

Process where the Agreement is the Lead Code

10.25 Where the Cross Code Steering Group determines that this Agreement is to be used as the Lead Code for a Change Proposal, then:

10.25.1 the Secretariat shall progress that Change Proposal in accordance with this Agreement; and

10.25.2 the Secretariat shall coordinate with the code administrators of the other affected Energy Codes so that they can manage the processes under their Energy Codes in parallel with the process under this Agreement;

10.25.3 the Change Proposal shall only be approved if both (i) the Change Proposal is approved in accordance with this Agreement; and (ii) the associated Consequential Changes under the other Energy Codes are all approved in accordance with those other Energy Codes; and

10.25.4 if the Change Proposal is approved in accordance with this Agreement, but one or more of the associated Consequential Changes under the other Energy Codes are not approved in accordance with those other Energy Codes, then the Panel may, within 30 days of the decision or other determination which triggered the application of this sub-clause, refer the Change Proposal and all associated Consequential Changes to the Authority for a decision (as if Clause 13.17 applied, and as if the Panel had been designated under Clause 10.2.4).

Process where this Agreement is not a Lead Code

10.26 Where the Cross Code Steering Group determines that an Energy Code other than this Agreement is to be used as the Lead Code, then the Secretariat shall progress the relevant Consequential Change in accordance with this Agreement, but subject to the following:

10.26.1 the Secretariat shall progress the Consequential Change in parallel with the variation under the Lead Code, and subject to the timetable determined under the Lead Code;

10.26.2 the Consequential Change shall only be approved if both (i) the Consequential Change is approved in accordance with this Agreement; and (ii) the variation to the Lead Code is approved in accordance with the Lead Code; and

10.26.3 if the variation to the Lead Code is approved, but the Consequential Change is not approved in accordance with this Agreement, then the panel (or other relevant body) under the Lead Code may refer the decision in respect of the Consequential Change to the Authority (as if Clause 13.17 applied, and as if such body had been designated under Clause 10.2.4); provided that such referral must be made within 30 days after the later of the approval under the Lead Code or the rejection under this Agreement.

Raising Change Proposals

10.27 Where a Consequential Change to this Agreement has been identified by the Cross Code Steering Group in connection with a proposed change to another Energy Code, the code manager/administrator for that other Energy Code shall be entitled to raise a Change Proposal under this Agreement to deal with such

consequential change. In such cases, the code manager/administrator shall be treated as if it had been designated in writing by the Authority under Clause 10.2.4.

Energy Market Data Specification

10.28 The Secretariat shall ensure that the meta data for all relevant Market Messages and Data Items utilised under this Agreement are defined within the Energy Market Data Specification, and (if necessary) shall raise a change under the REC Change Management Schedule to rectify any errors or omissions.

10.29 Where a variation is progressed in relation to a Market Message and/or Data Item defined within the Energy Market Data Specification, the relevant Meta Data Owner shall be defined as the Lead Code for the variation.

11. ASSESSMENT PROCESS

11.1 Where the Panel receives and accepts the referral of a Change Proposal in accordance with Clause 10, it shall ensure that the proposal is subjected to a process of assessment in accordance with this Clause 11 (the **Assessment Process**).

Notification of Parties

11.2 The Secretariat shall, as soon as is reasonably practicable after a Change Proposal is placed into the Assessment Process, send a copy both of that proposal and of its initial written assessment of the proposal to:

11.2.1 each Party;

11.2.2 the Consumer Body;

11.2.3 the Independent System Operator and Planner;

11.2.4 any person or body which is designated in writing by the Authority for the purpose of Clause 10.2.4; and

11.2.5 the Authority.

Determination of Procedure

11.3 At the Panel meeting at which the Panel receives and accepts the referral of a Change Proposal, it shall determine whether that proposal is to be subject to the Definition Procedure.

11.4 Where the Panel determines that a Change Proposal is to be subject to the Definition Procedure, that procedure shall first be completed before the proposal is submitted to the Secretariat for the purposes of the Report Phase.

11.5 In every other case, the proposal shall be submitted directly to the Secretariat for the purposes of the Report Phase.

11.6 The Panel shall not determine that a Change Proposal is to be subject to the Definition Procedure if in its opinion the proposal is:

11.6.1 insubstantial in nature, concerned solely with the technical legal drafting of this Agreement, or concerned solely with a variation to this Agreement that is obligatory under or by virtue of any legislation; and

11.6.2 unlikely to be the subject of significant controversy between the Parties.

11.7 The Panel shall otherwise, having regard in respect of a Change Proposal to:

11.7.1 the Prioritisation Criteria, whether the Change Proposal is an Urgent Change Proposal or not, and, where the Change Proposal is not an Urgent Change Proposal, its Prioritisation Category; and

11.7.2 the degree of clarity as to the issues to which the proposal gives rise and the likely effects of the proposed variation of the Agreement,

consider whether in its opinion it would be appropriate for the proposal to be subject to the Definition Procedure and determine the matter accordingly.

Part 1/Part 2 Matters

11.8 At the same meeting at which the Panel determines whether a Change Proposal is to be subject to the Definition Procedure, it shall also determine whether in its opinion the proposal relates to a Part 1 Matter or a Part 2 Matter (taking into account the Proposer's opinion provided pursuant to Clause 10.4.7).

11.9 A Change Proposal shall be treated as relating to a Part 1 Matter or a Part 2 Matter in accordance with the determination of the Panel for all the purposes of this Section 1C, unless and until the Authority determines to the contrary under Clause 11.21 or Clause 13.22.

11.9A The Definition Procedure shall not apply to Authority-Led Change Proposals. In respect of all Authority Change Proposals, the Authority may by direction specify and/or amend:

11.9A.1 the timetable to apply to each stage of the Assessment Process for the Change Proposal; and/or

11.9A.2 the date from which the variation envisaged by the Change Proposal is to take effect.

Timetable

11.10 Unless a timetable has already been established by the Authority in accordance with Clause 11.9A, at the same meeting at which the Panel determines whether a Change Proposal is to be subject to the Definition Procedure, it shall also, having regard to the Prioritisation Criteria, and whether the Change Proposal is an Urgent Change Proposal or, if the Change Proposal is not an Urgent Change Proposal, the Prioritisation Category accorded to the Change Proposal, determine a timetable for the completion of each stage of the Assessment Process. For the avoidance of doubt, the Panel shall not make any determinations regarding the proposed implementation date at this stage.

11.11 The overall timetable originally established for an Assessment Process in accordance with Clause 11.10 may not exceed six months. Where a Change Proposal is an Urgent Change Proposal, the Authority may, either on the application of a Party or of its own volition, direct that an alternative timetable applies in place of that set by the Panel.

11.12 Save in the case of a timetable established by the Authority in accordance with Clause 11.9A, the Panel may agree to vary the timetable at any subsequent meeting, having regard to any information about the complexity and significance of the Change Proposal that has been revealed by the Assessment Process prior to the date of that meeting (including where the Working Group established to consider that Change Proposal so requests). The Authority may, either on the application of a Party or of its own volition, veto any such variation, in which case the timetable will remain as it was immediately before the variation in question.

11.13 The Panel, the Secretariat and any Working Group shall each:

11.13.1 in the case of a timetable determined in accordance with Clause 11.9A, complete the respective tasks assigned to them under the Assessment Process within that timetable; or

11.13.2 in the case of a timetable determined in accordance with Clauses 11.10 and 11.12 (inclusive), use their best endeavours to complete the respective tasks assigned to them under the Assessment Process within that timetable.

Definition Procedure

11.14 The Panel may establish, in respect of a Change Proposal, a Working Group for the purpose of undertaking the activities (the **Definition Procedure**) of:

11.14.1 consulting with the Parties, and (where appropriate) with any interested third parties, on the proposal, which third parties shall include, in respect of proposals to vary one or more of the Charging Methodologies, any person whose interests the Working Group identifies as being materially affected by a Charging Methodology (which consultation shall, where appropriate, be by way of consultation with bodies who represent the interests of such third parties);

11.14.2 considering and clarifying the likely effects of the proposed variation to the Agreement and/or DCUSA Message, and indicating which Party Categories it considers will be affected by the proposed variation;

11.14.3 evaluating, developing and refining the proposed variation to the Agreement and/or DCUSA Message (and, in undertaking such evaluation in respect of a Change Proposal to vary one or more of the Charging Methodologies (but not the CCCM), the Working Group shall have regard to the ability of the Authority to veto any Change Proposal that appears to the Authority to have as its purpose or effect the full or substantial substitution of one Charging Methodology for another);

11.14.3A determining a plan to meet the timetable established for the Change Proposal under Clause 11.9A or Clauses 10.10 to 11.12 (as applicable), and notifying the Panel in the event that the Working Group requires more time to complete the activities set out in this Clause 11.14 (in which case the Working Group shall recommend an alternative timetable, and provide supporting information to justify the extension);

11.14.4 evaluating the likely impact of the proposed date for implementation of the variation, and where it considers appropriate amending this date, subject to the following:

A. an implementation date specified by the Authority in accordance with Clause 11.9A.2 may not be amended;

B. (subject to (A) above) the implementation date should be the date that enables the proposed variation to take effect as soon as practicable after the decision to implement has been reached, taking into account the Prioritisation Criteria, and whether the variation's associated Change Proposal is an Urgent Change Proposal, or, if the variation's associated Change Proposal is not an Urgent Change Proposal, its Prioritisation Category; and

C. in undertaking such evaluation in respect of a Change Proposal to vary one or more of the Charging Methodologies, the Working Group shall have regard to the obligations of DNO Parties under this Agreement, and under their Distribution Licences, regarding the frequency of changes to Use of System Charges, and regarding the notice to be given in advance of such changes;

11.14.5 considering whether, if the proposed variation were made, the Agreement and/or DCUSA Message would better facilitate the achievement of the DCUSA Objectives than if that variation were not made; and

11.14.6 considering whether it is likely that there would be a material impact on greenhouse gas emissions as a result of the proposed variation being made, and (if so) assessing such impact (which

assessment shall be conducted in accordance with any guidance on the treatment of carbon costs and evaluation of greenhouse gas emissions issued by the Authority from time to time).

11.15 A Working Group established for the purposes of the Definition Procedure shall comprise:

11.15.1 at least five individuals who each have relevant experience and expertise in relation to the subject matter of the Change Proposal and whose backgrounds are broadly representative of the persons likely to be affected by the proposed variation to the Agreement and/or Market Message; and

11.15.2 where the Proposer nominates such a person, one person nominated by the Proposer.

11.16 The Secretariat shall be invited to, and shall attend, meetings of the Working Group for the purposes of providing support to the group and facilitating the fulfilment of its duties in the Report Phase.

11.17 A Working Group established for the purposes of the Definition Procedure shall:

11.17.1 publish on the Website, and bring to the Parties' attention, a final consultation draft of the Change Proposal, including in particular the text of the proposed variation, the proposed implementation date and the Party Categories that it considers will be affected by the variation;

11.17.2 publish on the Website all consultation responses received and not marked as confidential; and

11.17.3 in accordance with the applicable timetable (but not less than five Working Days, and not more than 20 Working Days, after publication of such consultation draft), prepare, having regard to any consultation responses received, instructions to the Secretariat on the content of the Change Report.

11.18 Where any person serving on the Working Group objects to any aspect of the final consultation draft referred to in Clause 11.17, that person may require the Working Group to include in the final consultation draft such alternative to any aspect of the final consultation draft as that person may specify, so as to allow the Parties to comment on those alternatives.

Report Phase

11.19 The Secretariat shall, in respect of any Change Proposal submitted to it by the Panel, prepare a written report (the **Change Report**) on the proposal (the **Report Phase**). Where the Definition Procedure has been followed, the Secretariat shall prepare the Change Report in accordance with the instructions of the relevant Working Group.

11.20 The Change Report shall:

11.20.1 be addressed and delivered to the Panel;

11.20.2 specify which Party Categories should (in the opinion of the Secretariat or, where the proposal was subject to the Definition Procedure, the Working Group) be eligible to vote on the Change Proposal;

11.20.3 set out the proposed variation to the Agreement and/or DCUSA Message;

11.20.4 specify the likely effects of the proposed variation were they to be implemented;

11.20.5 state the proposed date for implementation;

11.20.5A in any case in which the proposal was not subject to the Definition Procedure prior to the Report Phase, include the Proposer's statements of:

A. the detailed reasons why the Proposer believes that this Agreement and/or DCUSA Message would, if the proposed variation was made, better facilitate the achievement of the DCUSA Objectives than if the variation was not made; and
B. whether the Proposer believes that there would be a material impact on greenhouse gas emissions as a result of the proposed variation being made; and
C. the assessment of the proposal by the Proposer against the Prioritisation Criteria.

11.20.6 in any case in which the proposal was subject to the Definition Procedure prior to the Report Phase, provide a detailed summary of:

A. the views of the Working Group as to whether, if the proposed variation were made, the Agreement and/or DCUSA Message would better facilitate the achievement of the DCUSA Objectives than if that variation were not made;

B. any responses received to the consultation process conducted by the Working Group under the Definition Procedure and not marked as confidential, together with a statement of the location on the Website at which such responses can be found;

C. why the Working Group considers that the proposed variation better facilitates the achievement of the DCUSA Objectives than any alternative variation put forward in accordance with Clause 11.18 or by a respondent to the consultation; and

D. whether the Working Group considers it is likely that there would be a material impact on greenhouse gas emissions as a result of the proposed variation (or any of the alternative variations referred to in Clause 11.20.6(C)) being made, and (if so) the Working Group's assessment of such impact (in accordance with any guidance on the treatment of carbon costs and evaluation of greenhouse gas emissions issued by the Authority from time to time); and

11.20.7 set out, where it has been determined, a description of the determination of the Change Proposal's Prioritisation Category.

11.21 At any time prior to the Change Report being approved for submission to the Voting Procedure in accordance with Clause 11.22, the Authority may decide, having regard to any determination made by the Panel under Clause 11.8, that in its opinion the Change Proposal relates to a Part 1 Matter or a Part 2 Matter, in which case:

11.21.1 the Authority shall inform the Panel and the Secretariat of its opinion;

11.21.2 the Secretariat shall ensure that a statement of the Authority's opinion is included in the Change Report;

11.21.3 the Authority's opinion shall prevail over any contrary determination of the Panel under Clause 11.8, and the proposal shall be treated as relating to a Part 1 Matter or a Part 2 Matter in accordance with that opinion for all the purposes of this Section 1C; and

11.21.4 the Authority's opinion shall be without prejudice to its right subsequently to make a determination contrary to that opinion under Clause 13.22, and any such determination, when made, shall

prevail over any earlier opinion of the Authority.

11.22 Following receipt of a Change Report, the Panel shall either:

11.22.1 where the Panel considers that additional work or significant amendment of the Change Report is required, send it back to the Working Group (or, where the Change Proposal was not subject to the Definition Procedure, form a new Working Group) to consider the Change Report; or

11.22.2 as soon as reasonably practicable following receipt of the Change Report (but, unless otherwise exempted by the Authority, not earlier than 7 days after the Change Report was provided to the Authority), subject to Clause 11.24, ensure that the Change Proposal is submitted to the Voting Procedure in accordance with Clause 12.

11.23 The Panel may, prior to submitting a Change Report to the Voting Procedure, and having had regard to the consultation responses received, direct the Secretariat to amend the Change Report in one or more of the following ways:

11.23.1 to alter the Party Categories who will be eligible to vote on the proposal;

11.23.2 to alter the proposed date for the implementation of the proposal (provided that the Panel may not amend an implementation date specified by the Authority in accordance with Clause 11.9A.2);

11.23.3 to add (in addition to the variation proposed) up to three of the alternative variations referred to in Clause 11.20.6(C); and

11.23.4 to clarify or correct typographical errors in the Change Report or make other amendments which do not alter the substance of the Change Report,

but where one of the alternative variations referred to in Clause 11.20.6(C) is a variation that was submitted by the Proposer, the Panel must use its power under Clause 11.23.3 to direct the Secretariat to add that variation to the Change Report, whether or not it also directs that a second or third alternative variation shall be added.

11.24 Where the Change Report is amended in accordance with Clause 11.23.3, unless the Panel considers it necessary to modify the applicable Voting Procedure in some other manner, the Voting Procedure applying to such a Change Report will be modified so that the Parties can vote either to reject all of the proposed variations or to accept one of the proposed variations and reject the others.

The Change Register

11.25 The Secretariat shall establish and maintain a register (the **Change Register**) for the purpose of assisting the Panel in the operation of the Assessment Process and ensuring that the Parties and any interested third parties may be informed as to the progress of Change Proposals.

11.26 The Change Register shall contain, in respect of each Change Proposal that is in the Assessment Process:

11.26.1 details of the proposal (including the name of the Proposer, the date of the proposal and a short summary of its intended purpose and effect);

11.26.2 whether the proposal relates to a Part 1 Matter or a Part 2 Matter;

11.26.3 whether the proposal is an Urgent Change Proposal or the Prioritisation Category of the Change Proposal, and details of the assessment undertaken under Clause 10.12.2; and, where the Prioritisation Category of a Change Proposal is changed, confirmation of the change should be reflected within the Change Register alongside the reasons for the change;

11.26.4 the timetable for the completion of each stage of the Assessment Process;

11.26.5 the current level of progress of the proposal within the Assessment Process; and

11.26.6 such other matters relating to the proposal as the Panel may from time to time direct the Secretariat to include in the Change Register.

11.27 The Secretariat shall ensure that the Change Register is updated at regular intervals so that the information it contains in relation to each Change Proposal that is in the Assessment Process is, so far as is reasonably practicable, accurate and up-to-date.

11.28 The Secretariat shall ensure that the Change Register is made available on the Website. The Secretariat shall send a copy of the Change Register to the Authority on the first Working Day of each month.

Withdrawal by Proposer

11.29 The Proposer may withdraw their support for a Change Proposal on notice to the Secretariat at any time; provided that, where the Proposer raised the Change Proposal pursuant to Clause 10.2.5, the Proposer may not withdraw such support unless it also provides evidence that the Authority has given its consent to such withdrawal.

11.29.A Where the Authority issues a “back-stop” direction under Condition 22.9ED of the Distribution Licences in respect of one or more Change Proposals, those Change Proposals (including any alternatives) shall be deemed to have been withdrawn (and Clause 11.31 shall not apply in respect of the withdrawal of those Change Proposals).

11.30 As soon as is reasonably practicable after receiving any such notice, the Secretariat shall notify the Parties that the Proposer has withdrawn their support and shall update the Change Register accordingly.

11.31 Where, within 10 Working Days of the Secretariat sending notice under Clause 11.30, the Secretariat receives notice from a Party that it is prepared to support the Change Proposal, that Party shall:

11.31.1 become the Proposer for the Change Proposal (and the Secretariat shall amend the Change Register accordingly); and

11.31.2 where the original Proposer has already nominated a person to serve on the relevant Working Group in accordance with Clause 11.15.2, be entitled to nominate a person to serve on the Working Group in place of the person so nominated.

11.32 Unless the Secretariat receives a notice under Clause 11.31, a Change Proposal withdrawn in accordance with Clause 11.29 shall cease to be subject to the Assessment Process and any Working Group established in respect of it shall be dissolved.

Review of Prioritisation Category of Change Proposals

11.33 The Panel shall review the Prioritisation Category of Change Proposals on a bi-annual basis and adjust the

relevant timetable for each Change Proposal accordingly.

12. VOTING

12.1 The purpose of this Clause 12 is to make provision for the Parties to vote as to whether any Change Proposal should be accepted or rejected (the Voting Procedure).

12.2 Each Change Proposal shall be put to a vote of the Parties in accordance with the Voting Procedure. For clarity, however, the Crowded Meter Room Coordinator does not form a Party Category, and is not entitled to participate in the Voting Procedure.

Groups - DNO Parties

12.3 The IDNO/OTSO Parties, the Supplier Parties, the CVA Registrants, the Gas Supplier Parties and the SIP Parties shall cast their votes on a corporate group basis, so that all of the Parties in each such Party Category that fall within a single Group shall collectively have only one vote. The DNO Parties shall cast their votes individually, so that each such Party has one vote. References in this Clause 12 and in Clause 13 to a "Group" shall, therefore, in the case of DNO Parties only, be taken as references to a "Party".

The Voting Procedure

12.4 The Panel shall procure the design, establishment and maintenance of a system by which:

12.4.1 the Change Report on each Change Proposal is sent to all Parties, specifying the time period within which votes must be cast;

12.4.2 each Group within each Party Category that is eligible to vote may cast one (and not more than one) vote on each of the questions comprising each vote (whether to accept or reject the proposed variation and whether to accept or reject the proposed implementation date);

12.4.3 each Group that votes is given the opportunity (but is not obliged) to comment on the reasons for its vote;

12.4.4 the vote of each Group is cast by means of a standard form;

12.4.5 the vote of each Group is cast in such a way as to permit its authentication as the valid and properly authorised vote of that Group;

12.4.6 the vote of each Group may be transmitted in such a manner as (so far as is reasonably practicable) ensures that it is secure and will not be interfered with; and

12.4.7 the votes of all of the Groups are received and collated for the purposes of Clause 13.

12.5 The Panel shall ensure that all Parties are informed of the means by which they may have access to and use the system established under Clause 12.4 for the purposes of the Voting Procedure, and of any changes made to that system from time to time which are likely to affect the way in which it may be accessed and used.

The Vote

12.6 In respect of each Change Proposal and the Change Report relating to that proposal, the Groups within the Party Categories specified in that Change Report as eligible to vote shall be entitled to cast a vote to accept or to reject either or both of:

12.6.1 the proposed variation set out in that proposal; and

12.6.2 the proposed implementation date set out in that proposal,

by means of the system established under Clause 12.4.

12.7 Each Group which casts a vote on whether to accept or reject the proposed variation in respect of a Change Proposal shall:

12.7.1 vote on the basis of its judgment, made by it in good faith, as to whether or not, if the proposed variation were made, this Agreement and/or the DCUSA Message would better facilitate the achievement of the DCUSA Objectives than if that variation were not made; and

12.7.2 where it wishes to do so, provide a statement in accordance with the system established under Clause 12.4 of the reasons, by reference to the DCUSA Objectives, for its vote.

Weighted Votes

12.8 The vote of each Group shall be allocated a weighting expressed as a percentage of the votes of all of the Groups within the same Party Category who voted (the **Weighted Vote**), which weighting shall be calculated in accordance with the provisions of Clauses 12.9 to 12.16.

12.9 In the case of:

12.9.1 the Party Category comprising the IDNO/OTSO Parties;

12.9.2 the Party Category comprising the Gas Supplier Parties;

12.9.3 the Party Category comprising SIP Parties; or

12.9.4 any other Party Category where five or fewer Groups in that Party Category cast their vote,

each Group in the Party Category shall have an equal Weighted Vote, calculated by dividing 100% by the number of Groups within that Party Category who cast their vote.

12.10 Except where Clause 12.9 applies, the Weighted Vote of each Group shall be calculated as follows:

$$\mathbf{WV = V + SVA}$$

Where:

WV is the Weighted Vote;

V is an initial allocation of a weighting to the vote of that Group (the Basic Vote), calculated in accordance with Clause 12.11; and

SVA is an adjustment factor (expressed as a percentage), designed to re-allocate between the Parties in a Party Category the Basic Vote of any Party in that category that is greater than 20% (the Surplus Vote Adjustment), and calculated in accordance with Clause 12.13.

Basic Vote

12.11 For the purposes of Clause 12.10, the Basic Vote (V) shall be calculated as follows:

$$V = \frac{N}{TN} \times 100\%$$

where:

N is (subject to Clause 12.12):

a. in respect of a Group comprised of DNO Parties, the aggregate number of Metering Points which each such DNO Party has on its network, as recorded in the Supplier Meter Registration Service;

b. in respect of a Group comprised of Supplier Parties, the aggregate number of Metering Points against which those Suppliers are registered across all of the Supplier Meter Registration Service; and

c. in respect of a Group comprised of CVA Registrants, the sum of the Maximum Export Capacities or Maximum Import Capacities (whichever is the greater on a site-by-site basis) of all of the Entry Points relating to Metering Systems for which those CVA Registrants are Registered; and

TN is, in respect of any Group, the sum of the values of N for all the Groups within the same Party Category as that Group which cast a vote.

12.12 In undertaking the calculations provided for in Clause 12.11, the Secretariat shall rely upon:

12.12.1 in the case of Clauses 12.11 (a) and (b) the information regarding registrations last provided to DCUSA Ltd under BSCP501 and (for MHHS) under BSCP711, and made available to the Secretariat prior to the vote in question; and

12.12.2 in the case of Clause 12.11 (c), the Party Details as set out in Schedule 11 on the date of the vote in question.

Surplus Vote Adjustment

12.13 For the purposes of Clause 12.10, the Surplus Vote Adjustment (**SVA**) shall:

12.13.1 in respect of a Party Category within which the Basic Vote of any Group is greater than 20%:

A. for that Group, have a negative value equal to the sum by which its Basic Vote is greater than 20% (the Surplus Vote); and

B. for each other Group within the same Party Category who casts a vote, be calculated in accordance with Clause 12.14; and

12.13.2 in respect of each Group in any other Party Category, have the value of zero.

12.14 In respect of each Group to which Clause 12.13.1(B) refers, the Surplus Vote Adjustment (**SVA**) shall have a positive value calculated as follows:

$$\mathrm{SVA} = \mathrm{SV} \times \frac{\mathrm{N}}{\mathrm{XN}}$$

where:

SV is the sum of the values of the Surplus Votes of any Groups in the same Party Category as that Group;

N has the same meaning for that Group as it does in Clause 12.11; and

XN is the sum of the values of N for all the Groups in the same Party Category as that Party which cast a vote, excepting those with a Surplus Vote.

Further Adjustment

12.15 Where, on applying the formula at Clause 12.14 in respect of any Group, the Weighted Vote of that Group is greater than 20%:

12.15.1 the Weighted Vote of that Group shall be 20%;

12.15.2 the amount by which the Weighted Vote of that Group would otherwise have exceeded 20% shall be allocated between the other Groups within the same Party Category which cast a vote and which have Weighted Votes of less than 20%;

12.15.3 that amount shall be allocated between those other Groups on the same basis as a Surplus Vote allocated in accordance with Clause 12.14; and

12.15.4 the Weighted Votes of those other Groups shall be increased accordingly.

12.16 Where the effect of any adjustment in accordance with Clause 12.15 is to increase the Weighted Vote of any Group so that it is greater than 20%, a process of adjustment equivalent to that set out in Clause 12.15 shall be repeated until no Group's Weighted Vote is greater than 20%.

If no Group in a Party Category Votes

12.17 Where, in respect of a Change Proposal and a Party Category that is specified in the relevant Change Report as being eligible to vote, no Group in that Party Category casts a vote, such Party Category shall, for the purposes of Clause 13, be treated as if it were not eligible to vote.

13. THE CHANGE DECISION

13.1 The purpose of this Clause 13 is to determine whether or not a Change Proposal is to be accepted and the proposed variation to this Agreement and/or DCUSA Message made accordingly. The process shall be applied independently to the vote concerning the proposed variation and to the vote concerning the proposed implementation date, to determine in each case whether the proposal is accepted or rejected.

13.2 In the case of a Change Proposal that relates to a Part 1 Matter a vote by the Parties to accept or reject that proposal shall have the status of a recommendation to the Authority to determine that the proposal is to be accepted or rejected, and shall not by itself have the effect of an acceptance or rejection of the proposal.

13.3 In the case of a Change Proposal which relates to a Part 2 Matter, a vote which meets the criteria set out in this Clause 13 shall be effective to determine the acceptance or the rejection of the proposal.

Declaration by the Secretariat

13.4 The Secretariat shall be responsible, in respect of each Change Proposal, for:

13.4.1 monitoring the votes which are received and collated in accordance with Clause 12.4;

13.4.2 calculating whether the votes, having regard to the Weighted Vote allocated to each Group, are sufficient to meet the thresholds set out in Clauses 13.5 and 13.6;

13.4.3 having made those calculations, declaring whether:

A. in the case of a Change Proposal that relates to a Part 1 Matter, the Parties are deemed to have recommended to the Authority that the proposal should be accepted or rejected; and

B. in the case of a Change Proposal that relates to a Part 2 Matter, the proposal is accepted or rejected; and

13.4.4 publishing, on the Website, which Groups voted and how each such Group voted.

Part 1 Matters

13.5 Where a Change Proposal relates to a Part 1 Matter, the Parties shall:

13.5.1 be deemed to recommend to the Authority that the proposal should be accepted where, for the majority of the Party Categories that were eligible to vote, the sum of the Weighted Votes of the Groups in each Party Category which voted to accept the proposal is more than 50%; and

13.5.2 in all other cases, be deemed to recommend to the Authority that the proposal should be rejected.

Part 2 Matters

13.6 Where a Change Proposal relates to a Part 2 Matter, that proposal shall be accepted where, for the majority of the Party Categories that were eligible to vote:

13.6.1 the number of Groups in each Party Category which voted to accept the proposal is greater than 65% of the total number of Groups in that Party Category which voted; and

13.6.2 the sum of the Weighted Votes of the Groups in each Party Category which voted to accept the

proposal is greater than 65%.

13.7 In all other cases a Change Proposal which relates to a Part 2 Matter shall be rejected. Notwithstanding such rejection, where:

13.7.1 the tests under Clauses 13.6.1 and 13.6.2 are satisfied in respect of all the Party Categories that were eligible to vote and that comprise 3 or more Groups; and

13.7.2 such rejection occurred only because either or both of the tests under Clauses 13.6.1 and 13.6.2 were not satisfied in respect of one or more Party Categories that comprise fewer than 3 Groups,

then, the Change Proposal shall be deemed to relate to a Part 1 Matter and the Parties shall be deemed to recommend to the Authority that the proposal should be rejected.

Notice by the Secretariat

13.8 The Secretariat shall, as soon as is reasonably practicable after making a declaration under Clause 13.4.3, give notice of that declaration to:

13.8.1 each Party;

13.8.2 the Consumer Body;

13.8.3 the Independent System Operator and Planner;

13.8.4 any person or body that is designated in writing by the Authority for the purpose of Clause 10.2.4; and

13.8.5 the Authority,

and shall ensure that the Change Register is updated so as to indicate the declaration made in relation to the Change Proposal.

The Change Decision - Part 1 Matters

13.9 Where the Authority receives notice from the Secretariat of a declaration made under Clause 13.4.3 in respect of a Change Proposal relating to a Part 1 Matter, the Authority shall determine whether that proposal shall be accepted or rejected having regard to:

13.9.1 its principal objective and statutory duties under sections 3A to 3D of the Act; and

13.9.2 whether in its opinion the proposed variation, if it were made, would better facilitate the achievement of the DCUSA Objectives than if that variation were not made.

13.10 In making a determination under Clause 13.9, the Authority:

13.10.1 may follow such procedure as it considers appropriate;

13.10.2 may have regard to such matters, and to any representations by such Parties, as it considers appropriate; and

13.10.3 shall in any event have regard to the recommendation made by the Parties by virtue of the Voting Procedure.

13.11 Where the Authority is to make a determination under Clause 13.9, the Secretariat shall provide the Authority with a copy of the relevant Change Report (with the notice referred to in Clause 13.8 attached) and shall, at the Authority's request, provide any other existing documents or information in respect of the Change Proposal in question.

13.11A Where the Authority determines that it cannot properly form an opinion on whether to accept or reject a Change Proposal, the Authority may direct the Panel to revise and resubmit the Change Report, in which case:

13.11A.1 the vote under Clause 12 in respect of such Change Proposal shall be null and void;

13.11A.2 the Panel shall give effect to any direction of the Authority as to how the Change Proposal should be treated, including where necessary sending the Change Proposal back to the relevant Working Group (or establishing a Working Group) to further consider the Change Proposal and any matters identified by the Authority in such direction;

13.11A.3 once the Panel is satisfied that the issues identified by the Authority have been addressed, the Panel shall resubmit the Change Proposal to the Voting Procedure.

13.12 Where the Authority, acting in accordance with Clauses 13.9 and 13.10, determines that a Change Proposal shall be accepted or rejected, it shall direct the DNO Parties and IDNO Parties accordingly and that proposal shall be so accepted or rejected for the purposes of this Clause 13.

13.13 Any direction as referred to in Clause 13.12 will be effectively given if communicated by the Authority to the Panel (which may be care of the Secretariat). Where any such direction or notification is, nevertheless, communicated to the DNO Parties and IDNO Parties, those Parties shall, as soon as practicable following receipt of such direction or notification, forward a copy to the Panel (care of the Secretariat).

13.14 The Secretariat shall, as soon as is reasonably practicable after the receipt, pursuant to Clause 13.13, by the Panel of a determination by the Authority, as referred to in Clause 13.12), notify the following persons whether the Change Proposal has been accepted or rejected:

13.14.1 each Party;

13.14.2 the Consumer Body;

13.14.3 the Independent System Operator and Planner; and

13.14.4 any person or body that is designated in writing by the Authority for the purpose of Clause 10.2.4,

and shall ensure that the Change Register is updated so as to indicate the determination made in relation to the Change Proposal.

13.15 Where any Change Proposal that relates to a Part 1 Matter is accepted by virtue of Clause 13.12, the Panel shall ensure that the proposal is subject to Implementation in accordance with Clause 14.

The Change Decision - Part 2 Matters

13.16 The Panel shall, in the case of any Change Proposal that relates to a Part 2 Matter and that is accepted in accordance with Clause 13.6 ensure that the proposal is subject to Implementation in accordance with Clause 14.

Appeal of Part 2 Decisions

13.17 Any of the following persons who are aggrieved by the acceptance or rejection of a Change Proposal by virtue of Clause 13.6 or Clause 13.7 may appeal such acceptance or rejection to the Authority. Those persons are:

13.17.1 a Party;

13.17.2 the Consumer Body;

13.17.3 the Independent System Operator and Planner; and

13.17.4 any person or body that is designated in writing by the Authority for the purposes of Clause 10.2.4.

13.18 Such appeal may only be made within 10 Working Days after the Secretariat notifies the aggrieved Party of the acceptance or rejection of the proposal in accordance with Clause 13.8. Such appeal must:

13.18.1 be made in writing;

13.18.2 state why the Party believes (having regard to the criteria set out in Clause 13.20) that the acceptance or rejection of the Change Proposal by virtue of Clause 13.6 or 13.7 should be quashed; and

13.18.3 be copied to the Secretariat and to the Panel.

13.19 Where an appeal is validly made in accordance with Clauses 13.17 and 13.18, and such appeal is in respect of an accepted Change Proposal, then such acceptance shall be suspended pending the Authority's decision pursuant to Clause 13.20 and (if applicable) Clause 13.21.

13.20 If the Authority, following receipt of valid appeal under Clause 13.17 (and after having consulted with any persons and had regard to any information that it thinks fit), determines that:

13.20.1 the person making the appeal is likely to be unfairly prejudiced by the acceptance or rejection of the Change Proposal; or

13.20.2 where the Change Proposal was accepted, such acceptance may not better facilitate the achievement of at least one of the DCUSA Objectives than if it was rejected; or

13.20.3 where the Change Proposal was rejected, acceptance of the Change Proposal may have better facilitated the achievement of at least one of the DCUSA Objectives,

and that the appeal is not brought for reasons that are trivial or vexatious, and nor does the appeal have no reasonable prospect of success, then Clause 13.21 shall apply. Where the Authority determines that the requirements of this Clause 13.20 are not met, then any suspension of an accepted Change Proposal pursuant to Clause 13.19 shall cease, and Clause 14 shall apply.

13.21 Where this Clause 13.21 applies in respect of a Change Proposal in accordance with Clause 13.20 (but not

otherwise), then:

13.21.1 the Panel shall give effect to any interim direction of the Authority pending the decision of the Authority for the purposes of Clause 11.21.2, which interim direction may include a direction to implement the Change Proposal pending such decision of the Authority; and

13.21.2 the Authority may (having regard to the matters at Clauses 13.9 and 13.10 as if the Change Proposal related to a Part 1 Matter) determine that:

A. the appeal is dismissed, in which case the acceptance or rejection of the Change Proposal in accordance with Clause 13.6 or 13.7 shall stand (and any suspension of an accepted Change Proposal pursuant to Clause 13.19 shall cease); or

B. the appeal is successful, in which case the Authority may determine that:

i. the acceptance under Clause 13.6 shall be quashed (and the Change Proposal deemed rejected) or the rejection under Clause 13.7 shall be quashed (and the Change Proposal deemed accepted); or

ii. the Change Proposal shall be sent back to the Panel for reconsideration, and once the Panel is satisfied that the issues identified by the Authority have been addressed, the Panel shall resubmit the Change Proposal to the Voting Procedure.

13.22 Where the Authority's decision for the purposes of Clause 13.21.2 (B)(i) quashes the acceptance or rejection of a Change Proposal under Clause 13.6 or 13.7, then the Change Proposal shall be treated as if it related to a Part 1 Matter. Accordingly, the vote shall be reassessed in accordance with Clause 13.5 to determine the Parties recommendation to the Authority, and the decision for the purposes of Clause 13.21.2 (B)(i) shall be treated as a direction under Clause 13.12.

14. IMPLEMENTATION

14.1 The purpose of this Clause 14 is to provide that, where a Change Proposal has been accepted in accordance with Clause 13, the Panel shall make arrangements by which this Agreement and/or DCUSA Message will be varied in accordance with the variation so accepted (**Implementation**).

Implementation Date

14.2 In respect of Change Proposals which provide for a variation to Schedule 16, 17, 18, 20 and/or 29, where:

14.2.1 the implementation date for such Change Proposal accepted in accordance with Clause 13 is 1 April in any year; and

14.2.2 the date on which such Change Proposal was accepted in accordance with Clause 13 occurred less than 3 months prior to the date on which notice would need to be given in accordance with Clause 19.1A in order for amended Use of System Charges to have effect from that 1 April,

then the implementation date for such Change Proposal shall be deemed to be the following 1 April, unless the Authority has made a direction under Clause 19.1B, in which case the implementation date for such Change Proposal shall be the date directed by the Authority.

14.3 Where, in respect of any Change Proposal, the proposed variation to this Agreement and/or DCUSA Message is accepted in accordance with Clause 13 but the proposed implementation date is rejected:

14.3.1 the Change Proposal will be re-submitted to the Assessment Process and Voting Procedure but so that only the newly proposed implementation date (and not the proposed variation to the Agreement and/or DCUSA Message) is assessed and voted upon; and

14.3.2 the provisions of this Clause 14 shall not apply to the Change Proposal until the proposed implementation date is also accepted in accordance with Clause 13.

14.4 Where, in respect of any Change Proposal, the proposed variation to this Agreement and/or DCUSA Message is rejected in accordance with Clause 13 but the proposed implementation date is accepted, the Change Proposal as a whole shall be deemed to have been rejected in accordance with Clause 13.

Implementation

14.5 In respect of a Change Proposal which provides for a variation to Schedule 16, 17, 18, 20 and/or 29:

14.5.1 the relevant Schedules will be revised and issued to Parties clearly stating the implementation date (as set in accordance with Clause 14.2 where applicable);

14.5.2 in respect of each such Schedule to have effect from 1 April in any year, a finalised set of the Schedule must be issued (at the latest) within 5 Working Days after the date 3 months prior to the date on which notice would need to be given in accordance with Clause 19.1A in order for amended Use of System Charges to have effect from that 1 April (or, where the Authority has made a direction under Clause 19.1B in relation to the Schedule, within 5 Working Days after the date of such direction); and

14.5.3 following the issue to Parties of the finalised set of Schedules in accordance with Clause 14.5.2, the Panel shall, within 30 Working Days, arrange for the models referenced in the Schedules to be

issued to Parties identifying the Schedules to which such models relate.

14.6 In respect of a Change Proposal not subject to Clause 14.5, the Panel shall, at the next Panel meeting after a Change Proposal has been accepted:

14.6.1 determine what actions are required in order to ensure that the accepted variation may be made by the accepted implementation date; and

14.6.2 set a timetable for the completion of each of those actions which is required to ensure that the accepted variation may be made by the accepted implementation date.

14.7 It shall be the duty of the Panel to ensure that actions which are required to secure that an accepted variation may be made by the accepted implementation date are taken so as to secure that the variation is made by that date.

14.8 It shall be the duty of each Party to co-operate with the Panel to the extent required to ensure that such variation may be made by such date.

Subsequent Amendment to Implementation Date

14.9 Where, having regard to representations received from the Secretariat or from any Party, the Panel considers that it is not reasonably practicable to vary this Agreement and/or DCUSA Message by the relevant implementation date:

14.9.1 the Panel may request the Authority to direct that a new later implementation date be substituted for the first such date; and

14.9.2 where the Authority makes such a direction following a request by the Panel, the implementation date directed by the Authority shall have effect in substitution for the first such date, and the duties of the Panel and of each Party under this Clause 14 shall be defined by relation to that later date.

14.10 Where, having received representations from any Party as to the appropriateness of the relevant implementation date, the Authority (having first consulted with the Panel) considers that the implementation date should be amended so as to be either a later or an earlier date:

14.10.1 the Authority may direct that a new implementation date be substituted for the first such date; and

14.10.2 where the Authority makes such a direction following representations from any Party, the implementation date directed by the Authority shall have effect in substitution for the first such date, and the duties of the Panel and of each Party under this Clause 14 shall be defined by relation to the date so directed.

14.11 Without prejudice to Clause 14.10, in respect of an Authority Change Proposal:

a. the Authority may direct that a new implementation date be substituted for the first such date; and
b. where the Authority makes such a direction, the implementation date directed by the Authority shall have effect in substitution for the first such date, and the duties of the Panel and of each Party under this Clause 14 shall be defined by relation to the date so directed.

SECTION 2: COMMERCIAL ARRANGEMENTS

SECTION 2.A - DISTRIBUTOR TO SUPPLIER/GENERATOR RELATIONSHIPS

SCOPE OF SECTION 2A

This Section 2A and the Schedules referred to in it set out the terms and conditions under which a DNO Party or an IDNO Party shall provide Use of Distribution System to a Supplier Party or a CVA Registrant.

15. INTERPRETATION OF SECTION 2A

Party Obligations

15.1 In this Section 2A, in the Schedules when applied pursuant to this Section 2A, and in the terms defined in Clause 1 when used in this Section 2A or those Schedules, a reference to a Company is a reference to each Party that is either a DNO Party or an IDNO Party separately and individually and, where an obligation is imposed on, or a right granted to, a Company, that obligation is imposed on, and that right is granted to, each such Party separately and independently.

15.2 In this Section 2A, in the Schedules when applied pursuant to this Section 2A, and in the terms defined in Clause 1 when used in this Section 2A or those Schedules, a reference to a User is:

15.2.1 a reference to each Party that is either, or both of, a Supplier Party or a CVA Registrant separately and individually and, where an obligation is imposed on, or a right is granted to, a User, that obligation is imposed on, and that right is granted to, each such Party separately and independently; and

15.2.2 when made in relation to a Company and any period of time, a reference to each User (separately, individually and to the relevant extent) who is (or was), during that period, Registered in respect of a Metering Point or Metering System relating to an Entry Point or an Exit Point on that Company's Distribution System (provided that, in the case of Clauses 15, 16, 17 and 24, it shall include those Users who are taking steps to be so Registered, and that, in the case of Clauses 15, 24, 34 and 35, it shall include those Users who were once so Registered).

15.3 This Section 2A, and the Schedules when applied pursuant to it, shall:

15.3.1 only create rights and obligations between DNO/IDNO Parties (on the one hand) and Supplier Parties/CVA Registrants (on the other), and shall not create rights or obligations between DNO/IDNO Parties and other DNO/IDNO Parties or between Supplier/CVA Registrants and other Supplier/CVA Registrants;

15.3.2 not apply to the OTSO Party;

15.3.3 only create obligations between a Company and a User to the extent that, and in relation to those periods for which, that User is (or was) or is seeking to be Registered in respect of a Metering Point or Metering System relating to an Entry Point or an Exit Point on that Company's Distribution System; and

15.3.4 not impose any obligations between a Company and a User in relation to periods for which that User is (or was) not, and is not seeking to be, Registered in respect of any Metering Points or Metering Systems relating to Entry Points or Exit Points on that Company's Distribution System.

References in Relation to Companies and Users

15.4 In this Section 2A, in the Schedules when applied pursuant to this Section 2A, and in the terms defined in Clause 1 when used in this Section 2A or those Schedules, references to:

15.4.1 a Metering Point or Metering System are, when made in relation to a User and any period of time, references to a Metering Point or Metering System Registered to that User during that period;

15.4.2 an Entry Point or Exit Point are, when made in relation to a Company, references to an Entry Point or Exit Point on that Company's Distribution System;

15.4.3 an Entry Point or Exit Point are, when made in relation to a User and any period of time, references to an Entry Point or Exit Point relating to a Metering Point or Metering System Registered to that User during that period;

15.4.4 a Connectee, Connected Installation, Connection Agreement, Contract, Metering Point, Metering System or Charge are, when made in relation to a Company, references to a Connectee, Connected Installation, Connection Agreement, Contract, Metering Point, Metering System or Charge relating to an Entry Point or Exit Point on such Company's Distribution System; and

15.4.5 a Connectee, Connected Installation, Connection Agreement, Contract or Charge are, when made in relation to a User and any period of time, references to a Connectee, Connected Installation, Connection Agreement, Contract or Charge relating to an Entry Point or Exit Point relating to a Metering Point or Metering System Registered to that User during that period.

Use of the Same Market Domain I.D.

15.5 Where, in relation to any period of time, more than one User is using the same Market Domain I.D. or (for MHHS) the same Market Participant ID, and where it is not reasonably practicable for a Company to identify which of those Users is Registered in respect of a particular Metering Point or Metering System, the Users shall be deemed, as against that Company, to be jointly and severally liable in respect of that Metering Point or Metering System.

Additional Interpretation

15.6 In this Section 2A, in the Schedules when applied pursuant to this Section 2A, and in the terms defined in Clause 1 when used in this Section 2A or those Schedules, any reference to a "charging period" is, subject to any contrary indication, a reference to the period specified in the Relevant Charging Statement (or, if no period is specified therein, a calendar month).

Distribution Code, Distribution Licence and Distribution Business

15.7 In this Section 2A, in the Schedules when applied pursuant to this Section 2A, and in the terms defined in Clause 1 when used in this Section 2A or those Schedules, any reference to "Distribution Code", "Distribution Licence" and "Distribution Business" are references to the Company's Distribution Code, the Company's Distribution Licence and the Company's Distribution Business.

16. CONDITIONS PRECEDENT

16.1 The rights and obligations of each Company as against each User (and of each User as against each Company) under Clauses 18 to 25 (inclusive) and 29 to 33 (inclusive) are conditional upon each of the following conditions precedent being fulfilled:

16.1.1 where the User has not previously been Registered in respect of any Metering System or Metering Point relating to an Entry Point or an Exit Point on the Company's Distribution System, that the User has notified the Company that the User intends to become so Registered and that the User and the Company have exchanged such contact, invoicing and other similar information as the other reasonably requests;

16.1.2 where the User is a Supplier Party, that the User holds a Supply Licence;

16.1.3 where the User is a CVA Registrant, that the User is a BSC Party and is Registered in respect of one or more CVA Metering Systems that are connected directly to a Distribution System;

16.1.4 that the Company holds a Distribution Licence;

16.1.5 that both the User and the Company are party to the Connection and Use of System Code and any necessary supplemental agreement pursuant to it (to the extent that the User or the Company is required to do so by its Licence, and/or the Company is required by the CUSC not to provide Use of Distribution System unless the User does so);

16.1.6 that both the User and the Company are party to the Balancing and Settlement Code;

16.1.7 where the User is a Supplier Party, that the Retail Energy Code and the Data Transfer Service Agreement are in full force and effect between the User and the Company, and that such agreements are unconditional save for any conditions that this Agreement becomes unconditional; and

16.1.8 that both the User and the Company are (if required to be by their licence under the Act) party to the Smart Energy Code.

16.2 If the conditions precedent set out in Clause 16.1.2 to 16.1.7 (inclusive) are not fulfilled as between a Company and a User at the date this Agreement becomes effective between those Parties, that Company and that User shall each take all appropriate steps within its power to procure the fulfilment of those conditions relating to it which have not already been fulfilled.

16.3 Once each of the conditions precedent in Clause 16.1 has been fulfilled as between a Company and a User, the Company and the User shall each take all appropriate steps within its power to keep such conditions precedent relating to it fulfilled.

17. CONTRACTS

Appointment as Agent

17.1 The Company hereby appoints the User as the Company's agent for the purpose of procuring agreements with Customers and Generators on the terms set out at Schedule 2B (the National Terms of Connection) in accordance with this Clause 17, and the User agrees to act in that capacity.

17.2 In respect of the Customers of a Relevant Exempt Supplier, the User is authorised to, and shall, appoint the Relevant Exempt Supplier as the sub-agent of the User for the purpose of procuring agreements on the National Terms of Connection in accordance with this Clause 17, and shall procure that the Relevant Exempt Supplier agrees to and does act in that capacity.

Obligation to Include Wording in Contracts

17.3 The User shall ensure that, on each occasion on which it, or any Relevant Exempt Supplier, enters into a Contract (whether written, oral, or deemed), the wording set out in Schedule 2A is included within that Contract. The User shall ensure that such wording is presented in such a way as to create an effective contract (insofar as one can be created by presentation alone) between the Company and the relevant Customer or Generator on the terms and conditions of the National Terms of Connection.

17.3A Where a Change Proposal amends the wording set out in Schedule 2A, then the User shall have six months following the implementation of such Change Proposal during which the User can satisfy its obligation under Clause 17.3 by including (or ensuring that the Relevant Exempt Supplier includes) either the wording which was set out in Schedule 2A prior to implementation of the Change Proposal or the updated wording applying after implementation of the Change Proposal.

17.4 The User shall, on request, provide the Company with accurate and complete copies of the User's then current standard form of Contract.

Nature of Agency

17.5 The Company does not give authority to the agent or sub-agent to:

17.5.1 vary any of the wording included in a Contract in accordance with this Clause 17;

17.5.2 sue or be sued on the wording set out in Schedule 2A or on the National Terms of Connection;

17.5.3 make any profit out of the agency or sub-agency;

17.5.4 receive any payment in respect of its duties as agent or sub-agent; or

17.5.5 enter into any transactions involving the transfer of money.

17.6 The agency in respect of any single Contract ends when that Contract becomes effective.

17.7 The User shall not in its capacity as agent (and shall procure that any agent or sub-agent of the User shall not in that capacity):

17.7.1 pledge the credit of the Company in any way;

17.7.2 make or give any representation or warranty in relation to the Company unless the representation or warranty itself has been expressly approved in writing by the Company; or

17.7.3 agree or purport to agree to any obligations on the Company other than as set out in Schedule 2A.

17.8 The User shall indemnify the Company against all actions, proceedings, costs, demands, claims, expenses, liability, loss or damage arising from, or incurred by the Company as a consequence of, the User (or any Relevant Exempt Supplier) failing to comply with this Clause 17.

17.9 Where the User or any other Relevant Exempt Supplier does not, on the Company's reasonable request, in the context of an actual or threatened dispute, difference or disagreement with the relevant Customer or Generator, provide sufficient evidence to establish in any particular case that the User complied with Clause 17.3, then the User shall indemnify the Company as if the User had failed to comply with Clause 17.3 in that case. Where such evidence is released to the Company, they shall be subject to the Company's obligations of confidentiality under Clause 34.

Non-standard Connection Terms

17.10 Where the Company enters into a Connection Agreement (not acting via an agent pursuant to Clause 17.3) that includes Bespoke Connection Terms, the Company shall (save in the case of Domestic Premises or an Unmetered Supply) ensure that the Connection Agreement includes the following wording (with those words shown in square brackets amended to reflect the defined terms applying in the Connection Agreement):

17.10.1 The [Connectee] agrees that the [Distributor] shall, on the application of any person purporting to be an owner and/or occupier (or prospective owner and/or occupier) of the [Connected Premises], be entitled to disclose to such person the fact that this [Agreement] contains terms which differ from the terms set out in the National Terms of Connection (www.connectionterms.co.uk).

17.10.2 The [Connectee] shall, prior to selling or leasing its interest in the [Connected Premises] (or otherwise permitting a third party to occupy the [Connected Premises]), ensure that the existence and provisions of this [Agreement] are brought to the attention of such third party. For information, any such third party should note that it may automatically be bound by the provisions of this [Agreement] in accordance with the National Terms of Connection (www.connectionterms.co.uk).

17.10.A Where the User, or any Relevant Exempt Supplier, has procured an agreement on behalf of the Company in accordance with this Clause 17 and the Company intends to negotiate non-standard connection terms to apply in addition to or in substitution for the terms of such agreement, the Company shall notify the User of any of those non-standard terms which affect the Use of System Charges payable in respect of the Customer or Generator in question. The Company shall use reasonable endeavours to notify the User, by a method agreed between the Company and the User, of such non-standard terms within 10 Working Days after the later of their being entered into and any conditions therein being satisfied. Such notification shall specify, as a minimum, the relevant Metering Point(s) or Metering System(s), the relevant Maximum Import Capacity and / or Maximum Export Capacity and the effective date for such non-standard terms.

Disclosure of Information

17.11 On the application of any person purporting to be the owner and/or occupier of a Premises (or purporting to be a prospective owner and/or occupier of a Premises and who can show a reasonable cause for requiring the information), the Company shall be entitled to disclose to such person the following information relating to the Premises:

17.11.1 the Maximum Import Capacity and/or Maximum Export Capacity; and/or

17.11.2 whether or not the connection is subject to any constraints.

17.12 The Company shall, on the application of any person purporting to be an owner and/or occupier (or prospective owner and/or occupier) of a Connected Installation, disclose to such person whether or not Bespoke Connection Terms apply to the Connected Installation. For the avoidance of doubt, this Clause 17.12 does not oblige or permit the Company to disclose the content of the Bespoke Connection Terms.

18. USE OF SYSTEM

Provision of Use of System

18.1 Subject to the other provisions of this Agreement, the Company shall convey electricity through its Distribution System, for the User, to each Exit Point and from each Entry Point relating to a Metering Point or Metering System Registered to that User, subject to (in respect of each such Entry Point and Exit Point):

18.1.1 any arrangements made between the respective Connectee and the Company and the requirements (if any) of the respective Connectee agreed between such Connectee and the Company;

18.1.2 the Maximum Import Capacity (if any) or the Maximum Export Capacity (if any); and

18.1.3 such variations (if any) as may be permitted by the Regulations.

Prior Requirements: General

18.2 The obligation of the Company to convey electricity to a particular Exit Point or from a particular Entry Point pursuant to Clause 18.1 is, in each case, subject to:

18.2.1 there being a Connection Agreement in full force and effect relating to the connection of the relevant Connected Installation (whether such Connection Agreement was entered into in accordance with Clause 17 or otherwise);

18.2.2 the Company receiving confirmation that a Qualified Meter Operator Agent, Qualified Data Collector and Qualified Data Aggregator, or (for MHHS) a Qualified Meter Operator Agent and a Qualified Data Service, have been appointed in relation to that Exit Point or Entry Point (except that no Meter Operator Agent is required to be appointed in relation to an Unmetered Supply);

18.2.3 subject to Clause 29.10, the Company receiving confirmation that metering equipment has been installed in accordance with Clause 29;

18.2.4 where applicable, the Company receiving confirmation that the User has given notice of that Exit Point or Entry Point (as the case may be) to the Independent System Operator and Planner pursuant to the Connection and Use of System Code and the Grid Code (where appropriate); and

18.2.5 the Company not being entitled under Schedule 6 of the Act to De-energise an Exit Point or Entry Point.

Prior Requirements: Exit Points

18.3 In addition to the conditions set out in Clause 18.2, the obligation of the Company to convey electricity to an Exit Point is also subject to:

18.3.1 the User being validly Registered in respect of each Metering Point or Metering System relating to that Exit Point;

18.3.2 the User being authorised by its Supply Licence to supply electricity to each of the premises to be supplied with electricity through such Exit Point (or, where the Exit Point relates to a User

Installation that comprises a generating station, the User being authorised by its Generation Licence to generate electricity at that generating station);

18.3.3 where the User intends to provide any Unmetered Supply to a Customer, there being in full force and effect, in relation to that Exit Point, an Unmetered Supply Certificate and an Unmetered Demand Connection Agreement;

18.3.4 where the User intends to provide an Unmetered Supply to a Customer which is to be submitted to Settlement on the basis of half-hourly data generated by an Equivalent Meter, a Qualified Meter Administrator, or (for MHHS) a Qualified Unmetered Supplies Data Service, having been and remaining appointed by the User in relation to that Exit Point; and

18.3.5 the User being party to an agreement with the Company or a third party for provision of the services of meter asset provision in relation to that Exit Point. In the event that the User is not a party to such an agreement, the Company shall be entitled to provide such services, and to pass on to and recover from the User the costs of so doing (as Transactional Charges in accordance with Clause 22).

18.3A Where the Company provides the User with meter asset provision services pursuant to Clause 18.3.5 (and subject to any contrary agreement between the Company and the User to the contrary), the Company hereby authorises the User to permit third parties to work on and otherwise interfere with such meters provided that such persons do so in accordance with the requirements of this Agreement in respect of such work and other interference and provided that the User shall be liable to the Company for the acts or omissions of such persons as if they were the User's own.

Prior Requirements: Entry Points

18.4 In addition to the conditions set out in Clause 18.2, the obligation of the Company to convey electricity from an Entry Point is also subject to:

18.4.1 the User being validly Registered in respect of each Metering Point or Metering System relating to that Entry Point; and

18.4.2 where the Entry Point is also an Exit Point, the User or another user being validly Registered for the supply of electricity at such Exit Point.

19. CHARGES

Charges

19.1 The User shall pay to the Company in respect of services provided under this Agreement (and under the agreements referred to in Clause 19.2) the Charges set out in the Relevant Charging Statement (save where the Company is the Payor, in which case the Company shall pay such charges to the User).

Use of System Charges

19.1A The Company may vary the Use of System Charges at any time by giving the requisite period of written notice to the User. The requisite period of notice is (subject to Clause 19.1B):

19.1A.1 where the Company is a DNO Party acting within that DNO Party's Distribution Services Area:

A. in the case of the charges to apply from 1 April 2016 only, 3 months; or
B. in the case of the charges to apply on or after 1 April 2017, 15 months; or

19.1A.2 where the Company is an IDNO Party or a DNO Party acting outside of that DNO Party's Distribution Services Area:

A. in the case of the charges to apply from 1 April 2016 only, 2 months;
B. in the case of the charges to apply on or after 1 April 2017, 14 months.

19.1B The periods of notice described in Clause 19.1A shall apply unless the Authority directs the Company that those periods of notice need not apply. Where the Authority directs the Company that those periods of notice need not apply, the notice period shall be 40 days (without prejudice to any longer notice requirements prescribed by the Distribution Licence).

19.1C The "Use of System Charges" shall be the charges contained or referred to in the Company's Relevant Charging Statement for the time being in force pursuant to Condition 14 of its Distribution Licence, which Use of System Charges may either be stated in the Relevant Charging Statement as:

19.1C.1 a positive value, in which case they shall be payable by the User to the Company; or

19.1C.2 a negative value, in which case they shall be payable by the Company to the User.

Other Charges

19.1D The Company may vary the Other Charges at any time by giving the requisite period of written notice to the User (where the requisite period of notice is the period specified in the Company's Relevant Charging Statement or, where no such period is specified, 40 days). Notwithstanding that the Company may vary such charges at any time the Company shall use reasonable endeavours to: (1) vary such charges no more than two times per year: and (2) vary such charges with effect from April or October. Such charges and any variations are and will be calculated in accordance with the provisions of the Relevant Charging Statement.

19.2 The "**Other Charges**" shall be:

19.2.1 the charges for (i) the provision of MPAS, and (ii) (where applicable) the provision of Legacy Meter Asset Provision and of Data Services (all pursuant to the Company's obligations under, respectively, Condition 18 and Condition 36 of its Distribution Licence);

19.2.2 (to the extent not captured within Clause 19.1C) the charges for certain services ancillary to those for which Use of System Charges are levied and which are provided by the Company to the User pursuant to any of:

A. the BSC and the CUSC; or

B. the Retail Energy Code; and

19.2.3 the charges for any other services provided by the Company to the User pursuant to:

A. a provision of this Section 2A; or

B. any other agreement between the Company and the User for the provision of such services which provides for payment pursuant to this Agreement.

Adjustment of Charges

19.3 On any occasion upon which the Charges payable by or to the User under Clause 19.1 have not been calculated strictly in accordance with the provisions of the Relevant Charging Statement, an appropriate adjustment shall be made by the Company and submitted to the User.

19.4 Where an adjustment in accordance with Clause 19.3:

19.4.1 discloses an overcharge, the Payee shall repay to the Payor the amount by which the Payor has been overcharged together with interest thereon from the due date of the invoice containing the overcharge until the date of repayment; or

19.4.2 discloses an undercharge, the Payor shall pay to the Payee the amount by which the Payor has been undercharged together with interest thereon from the due date of the invoice which should have included the amount of the undercharge until the date of payment,

and (in either case) such interest shall accrue from day to day at the base lending rate during such period of Barclays Bank plc, compounded annually. Where the User disputes the adjustment, the User and the Company shall attempt to resolve the dispute in good faith. Where the dispute remains unresolved after 20 Working Days, either of them may refer the dispute to arbitration in accordance with Clause 58 and the User or the Company (as applicable) shall pay the amount payable or repayable (if any) as so determined.

Invoicing of Charges

19.4.A Notwithstanding Clauses 15.2.2, 15.3.2 and 15.4, where the Company is a UMSO for an EDNO, the provisions of this Clause 19 and of Clauses 20 and 21 shall be interpreted as follows:

19.4.A.1 references to a User and a period of time shall include a Supplier Party Registered during that period in respect of the Metering Points on the EDNO's Distribution System covered by the inventory for which the Company is the UMSO;

19.4.A.2 references to Entry Points and/or Exit Points on the Company's Distribution System shall include references to Entry Points and/or Exit Points on the EDNO's Distribution System associated with the Metering Points covered by the inventory for which the Company is the UMSO; and

19.4.A.3 references to Use of System Charges shall include the Use of System Charges relating to the Metering Points covered by the inventory for which the Company is the UMSO, which charges

shall be calculated on the basis of the Company's relevant all-the-way tariff(s) (as determined in accordance with the CDCM) and payable by the User to the Company.

19.4.B As a result of Clause 19.4A, where the Company is an EDNO which has appointed a DNO Party as the Company's UMSO, the provisions of this Clause 19 and of Clauses 20 and 21 shall be interpreted such that no Use of System Charges shall by payable by the User to the Company in respect of the Metering Points covered by the inventory for which the DNO Party is the UMSO (on the basis that those charges are instead payable to the DNO Party as the UMSO).

19.5 Subject to Clauses 19.4A and 19.4B, the Company shall invoice Use of System Charges (but excluding any Transactional Charges) payable by or to the User by reference to Settlement Class or DUoS Tariff ID using aggregated data obtained from the Supercustomer DUoS Report, except in relation to Metering Points or Metering Systems where:

19.5.1 the electricity imported via an Exit Point or exported via an Entry Point is not reported in the Supercustomer DUoS Report; and/or

19.5.2 the Use of System Charge is not comprised solely of one or more standing charges and/or one or more Unit Rates; and/or

19.5.3 the Use of System Charge is specified in the Relevant Charging Statement as not being billed on an aggregated basis; and/or

19.5.4 Use of System Charges are to be determined as a result of an Extra-Settlement Determination.

19.6 All charges payable by or to the User pursuant to this Clause 19 and Clauses 20, 21 or 22:

19.6.1 are exclusive of Value Added Tax and the Company shall include with such Charges (and the Payor shall, subject to a valid invoice having been issued, pay) Value Added Tax (if any) at the rate applicable thereto from time to time, and any such Value Added Tax shall be payable at the same time and in the same manner as the amounts to which it relates;

19.6.2 shall be without prejudice to any claims or rights which the Payor may have against the Payee and except as expressly permitted by Clause 19.6.3 or Schedule 4 shall be made without any set-off or deduction in respect of any claims or disputes or otherwise; and

19.6.3 shall, only where the Company submits on the same day one or more accounts for which the User is Payor and one or more accounts for which the User is Payee, be set-off against one another so that the User or the Company (as applicable) shall make a payment of the net value of those accounts.

19.7 The Company may calculate the Use of System Charges by reference to electricity discovered or reasonably and properly assessed to have been exported onto, or imported from, the Distribution System at an Entry Point or Exit Point relating to a Metering Point or a Metering System for which the User is Registered but not recorded at the time of such export or import (for whatever reason) by the metering equipment installed pursuant to Clause 29.1. At any time when the Company calculates the Use of System Charges under this Clause 19.7, it shall explain to the User the calculation of those charges and the basis of that calculation.

Revision of Charges

19.8 Without prejudice to Clause 19.1, where the Company is intending to revise any of its Use of System Charges, it shall serve a copy of any notice it sends to the Authority pursuant to Part F of Condition 14 of its Distribution Licence on the User as soon as is reasonably practicable after such notice is sent to the Authority.

Other Matters

19.9 Notwithstanding Clause 15.3, the Company may charge the User Use of System Charges calculated by reference to electricity assessed to have been supplied to a Customer while a customer of the User during a period in which the User was supplying electricity to that Customer in accordance with a last resort supply direction issued by the Authority in accordance with Condition 8 of the User's Supply Licence from the time that the direction takes effect. This right subsists from the date on which the last resort supply direction takes effect, and continues regardless of whether the Metering Point applying to the Customer is registered to the User in accordance with the Retail Energy Code, until such time as the relevant Metering Point is registered to another supplier in accordance with the terms of the Retail Energy Code.

19.10 For the avoidance of doubt, nothing in this Clause 19 precludes the Company and the User, at the request of either of them, from negotiating Use of System Charges arising from or pursuant to an Extra-Settlement Determination.

19.11 Where any dispute arises under Clause 19.10, either of the Company or the User shall be entitled to refer the matter to the Authority as if it were a dispute falling within Condition 7 of the Company's Distribution Licence.

Transitional Protection for Customers affected by BSC Modification P432 or MHHS

19.12 Part 4 of the CDCM contains transitional protection for Customers who may be affected by the implementation of BSC modification P432 or any other CT Metering Points catered for by MHHS. All DNO/IDNO Parties shall comply with Part 4 of the CDCM, including a DNO Party operating outside of its Distribution Services Area.

19.13 The User shall initiate the transition for all Customers covered under Clause 19.12. The Company shall conclude the transition for each Customer by allocating them to the correct site-specific tariff under the CDCM such that a Maximum Import Capacity is required (except for those domestic Customers who opt for an aggregated tariff under paragraph 132D of the CDCM).

19.14 The Company shall provide contact details to the User relating to agreeing the Maximum Import Capacity for the affected Customers. Prior to transition, the User shall confirm to the Company, using those contact details, the contact details of all the Customers impacted by P432, or any other CT Metering Points catered for by MHHS, used in providing the information to the Customer under Clause 19.15. The User shall also notify the Company, using those same contact details, on each and every occasion (if any) that there is a change of Customer at the Premises during the 12 months following the date on which the Premises is first migrated.

19.15 Prior to each Customer's transition (or on a change of Customer during the 12 months following first migration), the User shall (as a minimum) provide the Customer with the following information:

19.15.1 site address information, including MPAN and Meter Serial Number(s);

19.15.2 reason for the correspondence;

19.15.3 expected migration date;

19.15.4 the Company’s contact details (as provided by the Company under Clause 19.14); and

19.15.5 explanation of the process, including that the Company will set the Customer's enduring Maximum Import Capacity and charge capacity charges based on the site's highest peak import capacity over the 12-month transition period.

20. AGGREGATED BILLING AND PAYMENT

20.1 This Clause 20 applies in respect of those Charges to be levied by reference to the Supercustomer DUoS Report in accordance with Clause 19.5.

Initial Account

20.2 Following its receipt of each Supercustomer DUoS Report in accordance with the timetable for Settlement after each Settlement Run relating to each Settlement Day, the Company shall deliver Daily Statements to the User as soon as is reasonably practicable (including where these total zero).

20.3 The Company shall calculate in respect of the User as soon as is reasonably practicable after the end of each charging period an account or accounts (the **Initial Account**) specifying the Use of System Charges payable by or to the User in respect of each Initial Settlement Run in respect of which a Daily Statement has been produced and which has not previously been included in an Initial Account. Such Initial Accounts shall be based on the Daily Statements provided pursuant to Clause 20.2.

Reconciliation Account

20.4 Where a subsequent Daily Statement for any Settlement Day indicates that, as a result of a subsequent Reconciliation Run or Post-Final Settlement Run, the User's Use of System Charges in respect of that Settlement Day are different from those previously billed, the Company shall calculate such difference and the interest thereon (the **Reconciliation Account**), as soon as is reasonably practicable after the end of each charging period. Such interest shall be calculated in accordance with the provisions of Schedule 3.

Invoicing Initial Accounts & Reconciliation Accounts

20.4A As soon as is reasonably practicable after the end of each charging period, the Company shall submit an invoice (or credit note) to the User for the total aggregate amount owing by (or to) the User under the Initial Account for that charging period combined with any Reconciliation Accounts for previous charging periods. However, the Company shall not send the User an invoice (or credit note) for the charging period if the Initial Account is for zero and there are no Reconciliation Accounts.

20.5 Within 14 days of the date of an invoice (or credit note) submitted in accordance with Clause 20.4A, the Payor shall (subject to Clause 19.6) pay to the Payee the sum due, in pounds sterling by electronic transfer of funds to such bank account (located in the United Kingdom) as is specified in the invoice (or, where the Company is the Payor, such bank account as is notified to the Company by the User from time to time), quoting the invoice number against which payment is made and/or such other details as the Payee may reasonably require.

Disputes

20.6 Where any sum included in an Initial Account or Reconciliation Account submitted in accordance with Clause 20.3 or 20.4 is disputed by the User, the provisions of Schedule 4 shall apply.

Unmetered Supplies

20.7 This Clause 20 is to be interpreted in accordance with Clauses 19.4A and 19.4B.

21. SITE-SPECIFIC BILLING AND PAYMENT

21.1 This Clause 21 applies in respect of those Charges that relate to Metering Points or Metering Systems that fall within Clauses 19.5.1 to 19.5.3 (inclusive).

Submission of Account

21.2 As soon as is reasonably practicable after the end of each charging period, the Company shall submit to the User an account specifying the Use of System Charges payable by or to the User for the whole or any part of that charging period. Such account shall be based on:

21.2.1 data from metering equipment or any Equivalent Meter provided by the User in accordance with Clause 29.3 (which data shall not be rounded by the Company in any way); or, where actual data are not available, estimated data prepared in accordance with methods of estimation established under the Balancing and Settlement Code by the relevant Data Collector or (for MHHS) by the relevant Data Service or the Market-wide Data Service; and

21.2.2 other data as specified in the Relevant Charging Statement and/or the relevant Connection Agreement,

provided that the Company may use estimated data prepared by the Company where the User fails to provide the data under Clause 21.2.1 and 21.2.2, and, where an account is based on estimated data, the account shall be subject to any adjustment which may be necessary following the receipt of actual data from the User.

21.2A The Company shall use reasonable endeavours to ensure that the accounts created pursuant to this Clause 21 are submitted to the User at no greater frequency than:

21.2A.1 once in the first 7 days of any calendar month; and

21.2A.2 once in the second 7 days of any calendar month.

21.2B For MHHS Metering Points, for Settlement Periods whilst they are under MHHS arrangements, the Company shall submit, and the User agrees to receive, accounts by sending an electronic invoice using the REP-900 for all the User's accounts (including revised accounts and credit-notes). For non-MHHS Metering Points, and for MHHS Metering Points for Settlement Periods whilst they are not under MHHS arrangements, where the Company submits, and the User agrees to receive, accounts by sending an electronic invoice it shall use an electronic invoice for all of that User's accounts (including revised accounts and credit-notes). For the avoidance of doubt, where this Clause 21.2B applies, Clause 59.4 shall apply to the sending of accounts during any period in which the Data Transfer Network or (for MHHS) the DIP is unavailable.

21.2C Where an adjustment is required to any account for whatever reason (including where replacement data is received from the User), the Company shall issue a credit-note in respect of the original account and shall raise a new account for the new value.

Obligation to Pay

21.3 Within 14 days of the date of an account submitted in accordance with this Clause 21, the Payor shall (subject to Clause 19.6) pay to the Payee all sums due in respect of such account by electronic transfer of cleared funds to such bank account (located in the United Kingdom) as is specified in the account (or, where

the Company is the Payor, such bank account as is notified to the Company by the User from time to time), quoting the account number against which payment is made and/or such other details as the Payee may reasonably require.

Disputes

21.4 Where any sum included in an account submitted in accordance with this Clause 21 is disputed by the User, the provisions of Schedule 4 shall apply.

21.5 For the purposes of this Clause 21, the following terms shall have the following meanings:

"electronic invoice" means an account providing the data items set out in the REP-900 sent using the DIP, save that for non-MHHS Metering Points invoiced pursuant to Clause 20.2B it shall mean data flow D2021 sent using the Data Transfer Network.

Unmetered Supplies

21.6 This Clause 21 is to be interpreted in accordance with Clauses 19.4A and 19.4B.

22. TRANSACTIONAL CHARGES

22.1 This Clause 22 applies in respect of those Charges:

22.1.1 to be calculated by reference to the number or frequency of specific transactions, except where the billing and payment arrangements are otherwise provided for under the Retail Energy Code, the BSC, or the CUSC; or

22.1.2 referred to in Clauses 18.3.5 and 32.1,

(such Charges being **Transactional Charges**).

Submission of Account

22.2 Within 30 days after the end of each calendar month, the Company shall submit to the User an account specifying:

22.2.1 the payment due from the User in respect of services performed during that month for which Transactional Charges are payable, and

22.2.2 any Value Added Tax payable thereon.

Obligation to Pay

22.3 Within 30 days of the date of an account submitted in accordance with Clause 22.2, the User shall pay to the Company all sums due in respect of such account in pounds sterling by electronic transfer of cleared funds to such bank account (located in the United Kingdom) as is specified in the statement, quoting the invoice number against which payment is made.

Disputes

22.4 Where any sum included in an account submitted in accordance with Clause 22.2 is disputed by the User, the provisions of Schedule 4 shall apply.

23. PAYMENT DEFAULT

23.1 Subject to Clause 20.6, Clause 21.4 and Clause 22.4, failure by the Payor to pay any sum due as cleared funds by the due date for payment in accordance with Clause 20.5, Clause 21.3, or Clause 22.3 shall be a **Payment Default.**

23.2 Where the Payor so defaults, the Payee shall send a notice (a **Late Payment Notice**) to the Payor:

23.2.1 setting out the amount owed by the Payor to the Payee, and identifying the specific account to which the Payment Default relates;

23.2.2 stating to whom payment should be made;

23.2.3 specifying the method of payment; and

23.2.4 where the Payee intends to exercise its rights under Clause 23.3 and/or Clause 23.4, advising the Payor of such intention.

Interest

23.3 The Payee shall be entitled, without prejudice to any other right or remedy, to receive interest on any payment not duly made pursuant to the terms of Clause 20.5, Clause 21.3, or Clause 22.3 calculated from day to day at a rate per annum equal to the Default Interest Rate from the day after the date on which payment was due up to and including the date of payment, together with any reasonable administration charge notified by the Payee to the Payor from time to time.

Material Breach

23.4 Failure by the User to remedy a Payment Default within four Working Days of receipt of a Late Payment Notice from the Company shall be a material breach of this Agreement by the User for the purposes of Clause 54.1.1, and the Company shall be entitled to suspend registration services in accordance with Clause 54.2.1.

24. SECURITY COVER

24.1 The User shall provide Cover to the Company in accordance with the provisions of Schedule 1.

25. ENERGISATION, DE-ENERGISATION AND RE-ENERGISATION

Requirements for Those Undertaking Works

25.1 Energisation Works, De-energisation Works and Re-energisation Works carried out by or on behalf of the User pursuant to this Clause 25 shall be carried out by a person who is either engaged by the Company to carry out such work or who:

25.1.1 is an Approved Contractor, in accordance with the procedure set out in Schedule 5;

25.1.2 is a Competent Person to whom a Permission has been issued, in accordance with the procedure set out in Schedule 5, to carry out the particular activities comprising the Energisation Works, De-energisation Works or Re-energisation Works; and

25.1.3 acts in accordance with the requirements set out in Schedule 5.

Works Undertaken by the Company

25.2 Where:

25.2.1 neither the User nor any of its contractors is an Approved Contractor; or

25.2.2 no employee of the User or any of its contractors (if Approved Contractors) holds a Permission; or

25.2.3 the User does not have the rights of access required to undertake such Energisation Works, De-energisation Works or Re-energisation Works; or

25.2.4 the parties so agree,

the Company shall, to the extent that it may lawfully do so, at the request of the User, when the User is entitled to have carried out Energisation Works, De-energisation Works and Re-energisation Works, carry out such works at the cost of the User within a reasonable time or, in circumstances of urgency, as soon as is reasonably practicable. The Company shall on request by the User inform the User of its reasonable requirements for the details by reference to which Metering Points or Metering Systems to be Energised, De-energised or Re-energised are to be identified.

Good Industry Practice

25.3 The Company and the User shall both act in accordance with Good Industry Practice when carrying out, or procuring the carrying out of, any Energisation Works, De-energisation Works or Re-energisation Works.

Works Undertaken by the User

25.4 If circumstances exist which entitle the User or any Relevant Exempt Supplier to Energise, De-energise or Re-energise Metering Point(s) or Metering System(s) pursuant to the Contract or the Act, then, subject to Clause 25.13, the User may Energise, De-energise or Re-energise such Metering Points or Metering Systems provided that the User acts (where applicable and to the extent relevant) in accordance with Condition 27 of its Supply Licence.

25.5 If the User resolves to Energise or Re-energise a Metering Point or Metering System pursuant to Clause 25.4:

25.5.1 the User shall decide on the extent and nature of the Energisation Works or Re-energisation Works and the User shall undertake such Energisation Works or Re-energisation Works at its own cost; and

25.5.2 when such Energisation Works or Re-energisation Works are complete the User shall, in accordance with the BSC, instruct the MPAS Provider to register the relevant Metering Point or Metering System as Energised (but only, in the case of an Unmetered Supply, if the Energisation Works or Re-energisation Works have allowed the flow of electricity through the relevant Exit Point).

25.6 If the User resolves to De-energise a Metering Point or a Metering System pursuant to Clause 25.4:

25.6.1 the User shall decide on the extent and nature of the De-energisation Works and the User shall undertake such De-energisation Works at its own cost;

25.6.2 (in respect of Metering Points) when such De-energisation Works are complete, the User shall, in accordance with the BSC, instruct the MPAS Provider to register the relevant Metering Point as De-energised (but only, in the case of an Unmetered Supply, if the De-energisation Works have prevented the flow of electricity through the relevant Exit Point); and

25.6.3 (in respect of Metering Systems) when such De-energisation Works are complete, the User shall, in accordance with the BSC, instruct the CDCA to register the relevant Metering System as De-energised.

Duty to Indemnify

25.7 Where the Company carries out Works on behalf of the User pursuant to Clause 25.2:

25.7.1 the Company shall indemnify the User against all actions, proceedings, costs, demands, claims, expenses, liability, loss or damage arising from, or incurred by the User as a consequence of, physical damage to the property of the User, its officers, employees or agents, and in respect of the liability of the User to any other person for loss in respect of physical damage to the property of any person, in each case as a consequence of acting contrary to an accurate and appropriate instruction to De-energise a Metering Point or Metering System;

25.7.2 the User shall indemnify the Company against all actions, proceedings, costs, demands, claims, expenses, liability, loss or damage arising from, or incurred by the Company as a consequence of, physical damage to the property of the Company, its officers, employees or agents, and in respect of the liability of the Company to any other person for loss in respect of physical damage to the property of any person, in each case as a consequence of acting in reliance on any instructions given by the User to the Company which are materially inaccurate or misleading; and

25.7.3 where the User requests the Company to Energise, De-energise or Re-energise a single point of connection that is both an Exit Point and an Entry Point, the User shall also indemnify the Company against all actions, proceedings, costs, demands, claims, expenses, liability, loss or damage made against or incurred or suffered by the Company and resulting directly from such Works howsoever arising (including, where the User is Registered in respect of the Exit Point, any claim by the user Registered in respect of the Entry Point, and vice versa) except insofar as such actions, proceedings, costs, demands, claims, expenses, liability, loss or damage arise from the negligent act or omission or default of the Company, its officers, employees or agents (but, for the

avoidance of doubt, in complying with any such request the Company shall not be obliged to consider whether the point of connection is both an Exit Point and an Entry Point or whether different users may be Registered in respect thereof).

Company's Right to De-energise

25.8 The Company may, on giving the User two Working Days' prior written notice, De-energise any Metering Point or Metering System if:

25.8.1 the Company is entitled to do so pursuant to the Connection Agreement relating to such Metering Point or Metering System; or

25.8.2 any of the conditions set out in Clause 18.2 and 18.3 in relation to an Exit Point (or, in the case of an Unmetered Supply, any one or more of the relevant Exit Points) or in Clause 18.2 and Clause 18.4 in relation to an Entry Point cease to be fulfilled (or, in the case of Clause 18.2.2, remain unfulfilled 10 Working Days after the service of notice by the Company requiring the User to remedy the situation).

25.9 Notwithstanding the provisions of Clause 25.8, the Company may, at any time with no prior notice to the User, De-energise any Metering Point or Metering System if:

25.9.1 the Company is instructed, pursuant to the terms of the Connection and Use of System Code or the Balancing and Settlement Code to do so;

25.9.2 the Company reasonably considers it necessary to do so for safety or system security reasons;

25.9.3 the Company reasonably considers it necessary to do so to avoid interference with the regularity or efficiency of its Distribution System;

25.9.4 an accident or emergency occurs or threatens to occur which requires the Company to do so to avoid the risk of personal injury to any person or physical damage to the property of the Company, its officers, employees or agents, or the property of any other person;

25.9.5 it is entitled to do so under Schedule 8;

25.9.6 the rights of the User are suspended in accordance with Clause 54.2;

25.9.7 subject to the terms of a replacement agreement, this Agreement is terminated, or the User ceases to be a Party in accordance with the provisions of Clause 54.

25.10 In any of the circumstances set out in Clause 25.9, the Company shall inform the User as soon as is reasonably practicable, and in any event by the end of the next Working Day when MPAS is available, of the fact that the Metering Point or Metering System has been De-energised.

25.11 If the Company resolves to De-energise a Metering Point or Metering System pursuant to Clause 25.8 or 25.9:

25.11.1 the Company shall decide on the extent and nature of the De-energisation Works required to De-energise the relevant Metering Point or Metering System;

25.11.2 the Company shall Re-energise the Metering Point as soon as is reasonably practicable after the

circumstance giving rise to such De-energisation has ended; and

25.11.3 except where the Company resolves to De-energise a Metering Point or Metering System pursuant to Clause 25.8.1, 25.9.1, 25.9.2, 25.9.3, 25.9.4 or 25.9.6, the Company shall undertake both the De-energisation Works and the subsequent Re-energisation Works at the cost of the User, and the User shall pay to the Company the relevant Transactional Charges associated with both the De-energisation Works and the subsequent Re-energisation Works.

25.12 If the Company De-energises a Metering Point or Metering System pursuant to Clause 25.8 or 25.9 and such Metering Point remains De-energised for a period of three Working Days:

25.12.1 the Company shall forthwith instruct the User to send a notification, in accordance with the BSC, to the MPAS Provider or to the CDCA (as applicable) instructing it to register the relevant Metering Point or Metering System as De-energised (but only, in the case of an Unmetered Supply, if the De-energisation Works have stopped the flow of electricity through the relevant Exit Point); and

25.12.2 following the receipt of an instruction from the Company pursuant to Clause 25.12.1, the User shall send such a notification, in accordance with the BSC, to the MPAS Provider or to the CDCA (as applicable) and notify the relevant Meter Operator Agent.

25.13 If the Company Re-energises a Metering Point or a Metering System pursuant to Clause 25.11:

25.13.1 if an instruction has been given by the Company under Clause 25.12.1, the Company shall forthwith instruct the User to send a notification, in accordance with the BSC, to the MPAS Provider or to the CDCA (as applicable) instructing it to register the relevant Metering Point or Metering System as Energised (but only, in the case of an Unmetered Supply, if the Re-energisation Works have allowed the flow of electricity through the relevant Exit Point); and

25.13.2 following the receipt of an instruction from the Company pursuant to Clause 25.13.1, the User shall send such a notification, in accordance with the BSC, to the MPAS Provider or to the CDCA (as applicable).

25.14 The User shall not be entitled to Re-energise a Metering Point or Metering System which has previously been De-energised by the Company on its own behalf (for the avoidance of doubt, not acting on the instructions or at the request of the User) or on behalf of the Company. For the avoidance of doubt, the User shall be entitled to Re-energise a Metering Point or Metering System which has previously been De-energised by or on behalf of another supplier.

Disconnection Procedure

25.15 Not used.

25.16 If a third party or a User on behalf of a third party contacts the Company to request directly or indirectly that the Company undertakes Works in relation to a Metering Point or Metering System because there is no reasonably foreseeable future use for that Metering Point or Metering System and the Company is satisfied that the third party is entitled to make such request, then the Company shall (subject to Clause 25.17) Disconnect the Metering Point in accordance with Schedule 33 or shall Disconnect the Metering System (as applicable).

25.17 If, in any case, in the reasonable opinion of the Company there is a reasonably foreseeable future use for the Metering Point or Metering System, then the Company shall not be obliged to Disconnect the Metering Point or Metering System.

25.18 Not used.

25.19 Not used.

25.19A The Company and the User acknowledge that Condition 12.9A of the Distribution Licence prohibits the Company from Disconnecting a Green Deal Premises, unless certain circumstances set out in that Condition apply. Before Disconnecting a Metering Point, the Company shall check whether that Metering Point is identified in MPAS as relating to a Green Deal Premises. If the Metering Point is identified in MPAS as relating to a Green Deal Premises, then the Company shall not Disconnect the Metering Point unless the Company is of the reasonable opinion that it is entitled to do so in accordance with Condition 12.9A of the Distribution Licence.

25.19B The User shall indemnify the Company against all costs, demands, claims, expenses, liability, loss, or damage which the Company incurs in consequence of acting in reliance on whether or not a Metering Point is identified in MPAS as relating to a Green Deal Premises, including where:

25.19B.1 The Company Disconnects a Metering Point relating to a Green Deal Premises that was not identified as such in MPAS; or

25.19B.2 The Company refuses to Disconnect a Metering Point that does not relate to a Green Deal Premises because that Metering Point was incorrectly identified in MPAS as relating to a Green Deal Premises.

25.19C The Company shall indemnify the User and each Green Deal Provider against all costs, demands, claims, expenses, liability, loss, or damage which the User or relevant Green Deal Provider(s) incur or incurs (as applicable) in consequence of the Company Disconnecting a Green Deal Premises in breach of Condition 12.9A of the Distribution Licence where the Metering Point relating to that premises was correctly identified in MPAS as relating to a Green Deal Premises.

25.20 Subject to Clauses 25.17 and 25.19A, the Company shall carry out the Disconnection of the Metering Point or Metering System, and shall:

25.20.1 in respect of a Metering Point, send a notification, in accordance with Schedule 33, that the Metering Point has been Disconnected; or

25.20.2 in respect of a Metering System, provide a disconnection certificate to the User in accordance with the BSC.

Other Matters

25.21 If a Metering Point or Metering System has been De-energised by or on behalf of a previous user and the Company receives a request from the User to Re-energise such Metering Point or Metering System:

25.21.1 the Company shall Re-energise the Metering Point or Metering System as soon as is reasonably practicable and notify the User of when it expects to carry out the Re-Energisation Works;

25.21.2 the Company shall carry out all necessary Re-energisation Works at its own cost and shall then

reclaim such costs from the previous user; and

25.21.3 the Company shall notify the User as soon as the Re-energisation Works are complete and the User shall, within two Working Days of receiving such notification, send a notification to the MPAS Provider or the CDCA (as applicable) instructing it to register the relevant Metering Point or Metering System as Energised.

25.22 The Company shall notify Connectees of and carry out System Outages in accordance with its statutory rights and obligations and Good Industry Practice.

Work on Metering Equipment by Company

25.23 This Clause 25.23 applies to Metering Points for which the flow of electricity is metered for settlements by putting the full electrical current through the meter (known as 'whole-current metering'). Where the Company wishes to maintain, modify or replace the Electric Lines and/or Electric Plant which provides the connection to the Metering Point, the User hereby consents to the Company adjusting the terminals of the meter (and, where appropriate, re-making the connections to them to remedy any disturbance of the connections that may have occurred unintentionally).

25.24 Where the Company's work as referred to in Clause 25.23 can only reasonably be undertaken by the temporary removal of the meter, the User hereby consents to the Company temporarily removing the meter and then (as soon as reasonably practicable thereafter) re-installing the meter as close as reasonably practicable to its original position.

Relocation of Metering Equipment by the Company

25.25 Where the Company is relocating an Entry Point and/or Exit Point relating to a Customer Installation, the Company may (at its discretion and subject to Clauses 25.27 and 25.31), offer its services to the Customer to relocate the metering equipment associated with that Entry Point and/or Exit Point at the same time.

25.26 Where, pursuant to paragraph 1(1)(a) of schedule 6 of the Act, the User has asked the Company to relocate an Entry Point and/or Exit Point relating to a Customer Installation, the Company may (at its discretion and subject to Clause 25.27) agree with the User to relocate the metering equipment associated with that Entry Point and/or Exit Point at the same time.

25.27 The rights of the Company to relocate metering equipment are subject to the restrictions set out in the Distributor Meter Moves During Service Alterations Scope Document. Where the Company agrees to relocate metering equipment associated with an Entry and/or Exit Point in accordance with Clause 25.25 or Clause 25.26, the Company shall relocate the metering equipment in accordance with Good Industry Practice and the Distributor Meter Moves During Service Alterations Scope Document.

25.28 The User shall use reasonable endeavours to ensure that the relevant Meter Operator Agent and Meter Asset Provider consent to the Company working on and relocating the metering equipment that is the subject of an agreement made pursuant to Clause 25.25 or Clause 25.26.

25.29 Where the Company has relocated any metering equipment pursuant to Clause 25.25 or Clause 25.26, it shall notify the User and the User's appointed Meter Operator Agent of the metering equipment's new location in accordance with the REC.

25.30 The User agrees to the Company working on and relocating the metering equipment that is the subject of an agreement made between the Company and a Customer pursuant to Clause 25.25 (subject to Clause

25.31).

25.31 The User may at any time give the Company at least 90 days' notice in writing of the date from which the User's agreement under Clause 25.30 is to end, such that the Company cannot thereafter relocate metering equipment pursuant to agreements made with Customers under Clause 25.25. However, at any time thereafter, the User may give the Company 90 days' notice in writing that the User does again agree to the Company working on and relocating the User's metering equipment as referred to in Clause 25.30.

De-energisation and Re-energisation at the request of the Connectee

25.32 Clauses 25.33 to 25.36 (inclusive) only apply if the User is a Supplier Party (not a CVA Registrant).

25.33 The User shall establish, maintain and give effect to clear and transparent procedures by which Connectees can obtain temporary De-energisation and subsequent Re-energisation of the Connectee's Connected Installation in order to enable electrical work to take place at the installation.

25.34 In complying with Clause 25.33, the User shall, unless otherwise agreed with the Connectee:

25.34.1 offer an appointment for the temporary De-energisation that is within a reasonable time or, in circumstances of urgency, as soon as is reasonably practicable; and

25.34.2 offer a service whereby the De-energisation and Re-energisation can take place on the same day.

25.35 The User shall publish its procedures as referred to in Clause 25.33 on, and make them readily available from, its website.

25.36 For clarity, Clauses 25.1 to 25.7 (inclusive) apply to the De-energisation Works and Re-energisation Works undertaken by the User under Clause 25.34.

26. COMPLIANCE WITH THE DISTRIBUTION CODE

26.1 The Company and the User each undertake to comply with the Company's Distribution Code.

26.2 In the event of any conflict between this Section 2A and the Distribution Code, the Distribution Code shall prevail.

27. METER OPERATION CODE OF PRACTICE

27.1 The User shall procure that the Meter Operator Agent appointed for each Metering Point supplied by the User shall be a party to the Retail Energy Code, and shall comply with the Meter Operation Code of Practice in relation to that Metering Point.

27.2 The Company shall be party to the Retail Energy Code, and shall comply with, the Meter Operation Code of Practice.

28. COMPLIANCE WITH RADIO TELESWITCH AGREEMENT

28.1 Where the Company is a party to the Radio Teleswitch Agreement, the User shall become a party to the Radio Teleswitch Agreement prior to commencing to supply electricity to a Metering Point which is connected to a radio teleswitch (as such term is defined in the Radio Teleswitch Agreement).

28.2 In the event of any conflict between this Section 2A and the Radio Teleswitch Agreement, this Section 2A shall prevail.

29. METERING EQUIPMENT AND METERING DATA

Provision of Metering Equipment

29.1 Subject to Clause 29.10, the User shall (at its own cost) install and maintain, or procure the installation and maintenance of, metering equipment at (or as close as is reasonably practicable to) each Exit Point and Entry Point relating to Metering Systems or Metering Points for which the User is Registered. The User shall ensure that such metering equipment shall:

29.1.1 be capable of providing the relevant metering data required by the Company for the calculation of Use of System Charges;

29.1.2 comply with the requirements detailed in the Relevant Charging Statement;

29.1.3 comply with the requirements specified in the BSC; and

29.1.4 comply with Schedule 7 of the Act.

29.2 The User shall procure that metering equipment installed and maintained pursuant to Clause 29.1 shall be capable of operating within the accuracy limits specified in Schedule 6.

Provision of Metering Data

29.3 The User shall provide to the Company, or shall procure the provision to the Company of (without charge) such Metering Data relating to Metering Points and/or Metering Systems as the Company may reasonably require for:

29.3.1 the calculation of Use of System Charges; and

29.3.2 the operation, design and planning of its Distribution System.

29.4 For the purposes of Clause 29.3, the Company and the User acknowledge that it shall be reasonable for the Company to require any Metering Data which the User (or its BSC Party Agent) is obliged to provide to the Company and/or the relevant MPAS Provider in accordance with the provisions of, and in the form specified by, the REC and/or the BSC.

29.5 The User shall provide (or procure provision of) the Metering Data that it is required to provide (or procure the provision of) pursuant to Clause 29.3 in accordance with the timescales specified in the relevant provisions of the REC and/or the BSC (or, where none are specified, in accordance with the timescales specified in the Relevant Charging Statement).

Rights of Inspection

29.6 The Company shall be entitled to inspect, test and if necessary require the User to correct any metering equipment installed and maintained pursuant to Clause 29.1. The User shall use its reasonable endeavours, including the inclusion of appropriate terms in its Supply Contract and Power Purchase Contract, to procure that the employees, agents, sub-contractors and invitees of the Company shall at all reasonable times have safe and unobstructed access to such metering equipment. Where the Company exercises its right under this Clause 29.6, the provisions set out in Part 2 of Schedule 6 shall apply.

Operational Metering Equipment

29.7 The Company shall be entitled to install Operational Metering Equipment at or as close as reasonably practicable to any Exit Point or Entry Point in addition to any metering equipment installed and maintained pursuant to Clause 29.1 to collect data for the operation, design and planning of its Distribution System, but if it exercises this right it shall make no additional charge to the User in respect of such Operational Metering Equipment and shall not (except in the case of the failure of metering equipment installed and maintained pursuant to Clause 29.1) use data from the Operational Metering Equipment for the calculation of Use of System Charges. The Operational Metering Equipment need not be certified under paragraph 5 of Schedule 7 of the Act.

29.8 Where the Company installs Operational Metering Equipment in accordance with Clause 29.7:

29.8.1 the User shall (and shall procure that any Relevant Exempt Supplier shall) ensure that the employees, agents and invitees of the User (or Relevant Exempt Supplier) will not interfere with such equipment or the immediate connections to such equipment without the prior written consent of the Company, except to the extent that emergency action has to be taken to protect the health and safety of persons or to prevent serious damage to property proximate to the Operational Metering Equipment; and

29.8.2 the User shall (and shall procure that any Relevant Exempt Supplier shall) use its reasonable endeavours, including the inclusion of appropriate terms in its Supply Contract and Power Purchase Contract, to procure that the employees, agents, sub-contractors and invitees of the Company shall at all reasonable times have safe and unobstructed access to the Operational Metering Equipment. The Company agrees to procure that any individuals to whom access is given pursuant to this Clause 29.8.2 shall comply with all reasonable directions given by the User or the relevant Connectee and its appropriately authorised employees and agents as to general safety and site security arrangements.

Unmetered Supply

29.9 In relation to each Metering Point receiving an Unmetered Supply, the User and the Company shall comply (and the User shall procure that its BSC Agents comply) with the Unmetered Supplies Procedure (and, in particular, with those provisions requiring the exchange of information).

29.10 The provisions of Clauses 29.1, 29.2, and 29.6 shall not apply in relation to an Unmetered Supply which the User is permitted to supply under this Section 2A. When at any time the User ceases to be permitted to supply electricity on the basis that the supply of electricity is an Unmetered Supply, the User shall immediately become bound by all the provisions of this Clause 29 (other than those relating only to an Unmetered Supply).

Use of Metering Data

29.11 The User hereby agrees that the Company may aggregate and manipulate the Metering Data provided by the User to the Company under Clauses 29.3 and 29.4, and may share that data with any DNO Party or IDNO Party to whom the Company owes obligations under Section 2B for the purpose of matters provided for or envisaged by Section 2B (including the calculation of any charges payable by the Company under Section 2B).

Installation of Relevant Alt HAN Equipment

29.12 Where the User installs or arranges for the installation of Relevant Alt HAN Equipment in respect of any Premises, the Company agrees that the User may install the equipment such that it is connected to and

draws power from the Company's Distribution System; provided that the Relevant Alt HAN Equipment must be installed in such a way as to minimise the risk of illegal abstraction of electricity. The User may keep such Relevant Alt HAN Equipment installed, and may operate, inspect, maintain, repair, renew, reposition, replace and/or remove such Relevant Alt HAN Equipment.

30. PROVISION OF INFORMATION

New Contracts

30.1 The User shall:

30.1.1 in the case of Metering Points, except for the renewal of an existing Contract entered into after 31 August 1998, as soon as is reasonably practicable following g the User's application to become Registered in respect of that Metering Point;

30.1.2 in the case of Metering Systems, except for the renewal of an existing Contract entered into after 31 August 1998, as soon as is reasonably practicable following the Registration Effective From Date (as defined in the Balancing and Settlement Code, BSCP20) in respect of that Metering System,

(in each case) provide the information set out in Clause 30.2 to the Company in respect of the relevant Exit Point or Entry Point.

30.2 The information referred to in Clause 30.1 is:

30.2.1 the relevant Supply Number core data (as defined in the Retail Energy Code) or (as applicable) the relevant Metering System Identifier (as referred to in the Balancing and Settlement Code, BSCP20);

30.2.2 the relevant Connectee's name;

30.2.3 the Metering Point or Metering System address;

30.2.4 in respect of an Exit Point, the Customer's Maximum Import Capacity if:

A. the Customer is not a Domestic Customer (as defined in the Supply Licences);

B. the Customer has a maximum power requirement of not less than 20 kVA; and

C. the Customer is a new owner or occupier of the site; and

30.2.5 in respect of an Entry Point, the Maximum Export Capacity.

30.3 Where the provisions of Clause 30.1.1 or 30.1.2 are satisfied, the User shall use reasonable endeavours to provide the following information to the Company in respect of the relevant Exit Point or Entry Point:

30.3.1 the contact name for the Connectee if different from the Connectee's name; and

30.3.2 the Connectee's postal address if different from the Metering Point or Metering System address.

30.4 The User shall use reasonable endeavours to notify the Company of any changes to the details set out in Clause 30.2 and Clause 30.3 as soon as reasonably practicable following that change by reference to the Supply Number or Metering System Identifier (as applicable).

Dangerous Incidents and Damage

30.5 Where the User or its agent or any Relevant Exempt Supplier receives a report or enquiry from any person

about any matter or incident that does or is likely to:

30.5.1 cause danger or require urgent attention in relation to the supply or distribution of electricity in the Company's Distribution Services Area through the Distribution System; or

30.5.2 affect the maintenance of the security, availability and quality of service of the Distribution System,

the User shall notify the Company of such report or enquiry in a prompt and appropriate manner having regard to the nature of the incident to which the report relates. Where the User does not hold a Supply Licence (or to the extent the User does not discharge its obligation under Condition 20 of its Supply Licence) the User shall notify the Company of reports received from Connectees in accordance with this Clause 30.5. Where the User is a Supplier Party, it shall meet its obligations under this Clause 30.5 (insofar as relating to Category A Situations, Category B Situations and Category C Situations) by complying with Clauses 30.5A.1 to 30.5G.1 below. Such Clauses shall not apply where the User is not a Supplier Party.

30.5.A

30.5.A.1 Where the User (or its contractors or agents or any Relevant Exempt Supplier) receives a report or enquiry from any person about any matter or incident that does or is likely to cause danger or require urgent attention in relation to the supply or distribution of electricity through the Distribution System (including a Category A Situation), then the User shall ensure that the Company is notified of such report or enquiry by telephone in a prompt and appropriate manner having regard to the nature of the incident to which the report relates. The User shall ensure that such notification identifies the relevant asset condition code as set out in Part 2 of Schedule 24.

30.5.A.2 Subject to Clause 30.5D, on receipt of a telephone call in accordance with Clause 30.5A.1, the Company will send an appropriate person to the affected Premises within the Prescribed Period. If the report is received outside of Working Hours the report will be deemed to have been received at the commencement of the next period of Working Hours.

30.5.A.3 Where an appropriate person is unable to attend the affected Premises on behalf of the Company within the Prescribed Period for a Category A Situation, then (as soon as reasonably practicable after becoming aware that this is the case, and where the Company has contact details) the Company will telephone the User's Meter Operator Agent to inform the agent when an appropriate person will attend the Premises on the Company's behalf.

30.5.A.4 Subject to Clause 30.5D, if the Company is unable to remedy the situation during the initial visit to the affected Premises (as described in Clause 30.5A.2), then the Category A Situation will be made Safe, and the Company will:

a. within the Prescribed Period, agree an appointment date with the Connectee to re-visit the Premises to remedy the residual situation;
b. ensure that the date of such appointment is within the Prescribed Period; and
c. attend the Premises on the agreed appointment date and remedy the residual situation (such that no Category A Situation or Category B Situation is affecting the Premises).

30.5.B

30.5.B.1 Where the User (or its contractors or agents or any Relevant Exempt Supplier) receives a report or enquiry from any person about any matter or incident that is a Category B Situation, then the User shall ensure that the Company is notified of such report or enquiry using the Data Transfer Network (data flow D0135), or such other means as is agreed between the Company and the User, within 5 Working Days after receipt of such report or enquiry. The User shall ensure that such notification identifies the relevant asset condition code as set out in Part 2 of Schedule 24, and (where the User has the Connectee's permission to do so) contact details for the Connectee.

30.5.B.2 Subject to Clause 30.5D, on receipt of a notification in accordance with Clause 30.5B.1, the Company will, where contact details have been provided in the notification:

a. within the Prescribed Period, contact the Connectee and agree an appointment date to visit the Connectee to remedy the Category B Situation; and

b. ensure that the date of such appointment is within the Prescribed Period; and

c. attend the Premises on the agreed appointment date and remedy the Category B Situation (such that no Category A Situation or Category B Situation is affecting the Premises). In the event that the situation cannot be remedied on the first visit a further appointment will be booked to remedy the situation as soon as reasonably practicable.

30.5.B.3 On receipt of a notification in accordance with Clause 30.5B.1, where contact details have not been provided in the notification and the Connectee's contact details are not listed in the Company's Priority Services Register (as defined in the Distribution Licences), the Company may reject the notification. If the notification is not so rejected the Company shall be deemed to have met the Service Level for Clause 30.5B.2.

30.5.C

30.5.C.1 Where the User (or its contractors or agents or any Relevant Exempt Supplier) receives a report or enquiry from any person about any matter or incident that is a Category C Situation, then the User shall ensure that the Company is notified of such report or enquiry using the Data Transfer Network (data flow D0135) within 10 Working Days after receipt of such report or enquiry. The User shall ensure that such notification identifies the relevant asset condition code as set out in Part 2 of Schedule 24.

30.5.D

30.5.D.1 The obligations of the Company that are subject to the Service Levels shall only apply with effect from the date 12 months after the date referred to in Section 30.5F.2.

30.5.D.2 The obligations of the Company that are subject to the Service Levels shall be construed as obligations to use reasonable endeavours to comply with each Service Level on 90% of occasions within each Quarter; provided that (where the Company is a DNO Party) if the sum of the notified Category A Situations and Category B Situations during that Quarter across all Supplier Parties in respect of the Company's Distribution Services Area, exceeds 2% of the aggregate Smart Meter Installation Forecasts across all Supplier Parties in respect of that Quarter and the Company's Distribution Services Area, then the Company shall be released from its obligation to use reasonable endeavours to meet the Service Levels for obligations beyond that 2% level.

30.5.D.3 Where the Company has visited the affected Premises on the date agreed with the Connectee (pursuant to Clause 30.5A.4 or 30.5B.2), but has been unable to gain access to the Premises, the Company will:

a. be deemed to have met the Service Level for Clause 30.5A.4(c) or 30.5B.2(c) (as applicable);

b. (only where this is the first agreed appointment) contact the Connectee and agree an alternative appointment to visit the Connectee, and Clause 30.5A.4 or 30.5B.2 (as applicable) will apply as if the telephone call or the notification (as applicable) referred to in those Clauses had been received on the date of the Company's visit to the affected Premises; and.

c. (where this is the second agreed appointment) notify the User and the Meter Operator Agent via the Data Transfer Network (data flow D0126).

30.5.D.4 Where the Company and the Connectee are unable to agree an appointment date that falls within the Prescribed Period for Clauses 30.5A.4 (b) or 30.5B.2 (b), but they are able to agree one outside of that period, then the Company will be deemed to have met the Service Level.

30.5.D.5 Where the Company has used reasonable endeavours to agree an appointment for a Category B Situation and has been unable to agree one, then the Company will be deemed to have met the Service Level for Clause 30.5B.2 (a). In such circumstances, the Company shall notify the User and the Meter Operator Agent via the Data Transfer Network (data flow D0126).

30.5.D.6 Where the Company is an IDNO Party, it shall be released from its obligation to meet the Service Levels within a Distribution Service Area if the DNO Party for that Distribution Services Area has been released from its obligation under Clause 30.5D.2.

30.5.D.7 For the avoidance of doubt, the Company will be deemed to have met the obligations that are subject to the Service Levels where it meets its obligations under 30.5D.2 (or where it is deemed to have met a Service Level, or is released from its obligations, under this Clause 30.5D).

30.5.E

30.5.E.1 Where the Company has not met the Service Level for a Category A Situation or Category B Situation, the Company shall give priority to the resolution of this situation over others notified under Clause 30.5B.

30.5.E.2 On completion of work to remedy a Category A Situation or a Category B Situation, the Company shall notify the User and the User's Meter Operator Agent using the Data Transfer Network (data flow D0126), and shall specify in such notification the Company's view of the correct asset condition code (as set out in Part 2 of Schedule 24).

30.5.E.3 Where the Company believes that the User or the User's Meter Operator Agent has misreported an asset condition code (as set out in Part 2 of Schedule 24) the Company shall notify the User and the Meter Operator Agent.

30.5.E.4 On or after 1 April 2015, where situations reported by the User (or its Meter Operator Agent) to the Company specify an asset condition code (as set out in Part 2 of Schedule 24) which indicates a more serious situation than is actually the case, then the Company shall be entitled to levy Transactional Charges in accordance with the Relevant Charging Statement.

30.5.E.5 With effect from 27 February 2015 (or, where that is not reasonably practicable, as soon as reasonably practicable thereafter, and in any event from 1 June 2015), the Company will notify the User and the Meter Operator Agent of the appointment date agreed with each Connectee pursuant to Clause 30.5A.4 or 30.5B.2 within 5 Working Days after its agreement (such notification to be provided via the relevant Data Transfer Network flow). Any cancellation and or subsequent re-booking of an appointment date shall be notified by the same means and in the same timescales.

30.5.F

30.5.F.1 Starting with the Quarter commencing on 1 April 2015, the Company will produce a report in accordance with Part 3 of Schedule 24 for its Distribution Services Area, and in respect of each Quarter. The Company will send that report to the User within 55 Working Days after the end of that Quarter.

30.5.F.2 For the Quarter commencing on 1 July 2015 and each subsequent quarter, the User will produce and send to the Company a report in accordance with Part 4 of Schedule 24 for that Quarter and the subsequent periods required in accordance with the specified template. The User must send the report for each such Quarter to the Company by the last Working Day of the first month of the Quarter.

30.5.G

30.5.G.1 In performing its obligations under Clauses 30.5 to 30.5E.5 (inclusive), the Company may need to contact the User or may leave the Connectee in a situation where they need to contact the User. In order to facilitate this contact, the User shall provide to the Secretariat details of the User's emergency metering and follow-up points of contact for publication pursuant to paragraph 8 of Schedule 14. The User shall ensure that the Secretariat is notified of any changes to such details within 10 Working Days, and shall confirm existing details on an annual basis during September of each year. The Company shall use these contact details to contact the User, and shall provide the relevant contact details to Connectees.

Advance Notice of Interruptions

30.6 Where the User holds a Supply Licence and a Connectee is a Customer, the User shall, with the consent of the relevant Customer, provide the Company with details of any Customer who may be expected (by virtue of being of pensionable age or disabled or chronically sick) to require advance notice of interruptions to the supply of electricity and the Customer's requirement within three Working Days of receiving such details and requirements pursuant to the User's obligations under Condition 26 of its Supply Licence.

30.7 The User shall, with the consent of any Customer who has agreed a password with the User or any Relevant Exempt Supplier for access to the Customer's premises, provide the Company with appropriate details concerning that Customer and the Customer's password within two Working Days of notification of such password by the Customer.

30.8 The User shall use reasonable endeavours to ensure that all the facts, information and other details provided pursuant to Clause 30.6 and 30.7 remain true, accurate and complete in all respects.

Interference

30.9 Where the User holds a Supply Licence, the User shall (and shall ensure that its contractors and agents shall) in a prompt and appropriate manner having regard to the nature of the incident, inform the Company where the User has (or in the case of the User's contractors and agents, such contractors and agents have) reason to believe that there has been interference with any metering equipment at an Entry Point or an Exit Point on the Company's Distribution System that has prevented such metering equipment from correctly registering the quantity of electricity supplied, unless the User believes that the interference was caused by the Company.

30.10 Where the User has reason to believe that any interference reported by it (or by its contractors or agents) under Clause 30.9, or any incident reported to the User by the Company in accordance with paragraph 2 of Condition 27 of the Distribution Licence, has been caused by a criminal act it shall provide the Company with such information as is reasonably required for investigating the incident and resolving any safety concerns arising out of it.

30.11 Where the User holds a Supply Licence, the User shall inform the Company of the User's policy in relation to how incidents of the type described in Clauses 30.9 and 30.10 will be remedied, which may include:

30.11.1 the substitution of alternative meters;

30.11.2 the provision of prepayment meters; or

30.11.3 De-energisation Works.

30.12 Where the Company undertakes any remedial work in relation to a matter that:

30.12.1 has been reported to it by the User in accordance with Clause 30.9;

30.12.2 has been reported to the User in the manner referred to in Clause 30.10;

the Company shall inform the User, in a prompt and appropriate manner, of the remedial work undertaken.

Incident Management

30.13 Subject to Clauses 30.15 and 30.16, where the Company becomes aware of a single incident affecting Electric Lines with a nominal voltage of more than 1,000 volts that interrupts the supply of electricity to more than 5,000 Customers connected to the Company’s Distribution System, the Company shall use reasonable endeavours to notify the User (within a reasonable period of time after the occurrence of the incident) by email of the following information:

30.13.1 the approximate number of such Customers whose supply has been interrupted as a result of such incident;

30.13.2 the postcodes or areas affected by such incident;

30.13.3 the nature of such incident if known; and

30.13.4 the time by which it is anticipated that the supply of electricity interrupted by such incident will be

restored.

30.13A The User shall provide one or more contact email address(es) to the Secretariat for receipt of information under Clause 30.13, and shall ensure that this remains up to date, confirming this by 30 September in each calendar year. The Secretariat shall publish such contact information on the DCUSA Website, and where changes are notified update this as soon as reasonably practicable.

30.14 Subject to Clause 30.16, where the Company has notified the User of an incident pursuant to Clause 30.13, the Company shall use reasonable endeavours to notify the User by email (within a reasonable period of time after the supply of electricity interrupted by such incident has been restored) that such supply has been restored.

30.15 The Company shall not be obliged to comply with Clause 30.14 where the gravity of the incident, either alone or in combination with other incidents affecting the Company's Distribution System, makes it impractical for the Company to do so. Where this Clause 30.15 applies, the Company shall (subject to Clause 30.16) use reasonable endeavours to notify the User (within a reasonable period of time after the occurrence of such incident or incidents) by email of:

30.15.1 the fact that such incident or incidents have occurred; and

30.15.2 the location of such incident or incidents,

and the Company shall use reasonable endeavours to notify the User by email (within a reasonable period of time after the supply of electricity interrupted by such incident or incidents has been restored) that such supply has been restored.

30.16 The Company shall only be obliged to comply with Clauses 30.13, 30.14 and 30.15 where the User is a Supplier Party, and where the User has provided the Company with an email address for the purpose of receiving notifications pursuant to Clauses 30.13, 30.14 and 13.15. The Company may either include the information required by Clause 30.13, 30.14 or 13.15 within the email sent pursuant to those Clauses, or at a website address set out in the email.

30.17 Where the User is a Supplier Party, and where the User communicates with its Customers in relation to any of the incidents notified by the Company to the User pursuant to Clause 30.13 or 30.15, the User shall inform those Customers that they should contact the Company regarding the incident.

30.18 Where an incident arises in the course of the User (or its BSC Party Agent) or the Company undertaking work on (or in the immediate vicinity of) a Metering Point, and to the extent that it is reasonably necessary for the User and the Company to exchange information in order to resolve the incident, then the User and the Company shall exchange such information.

31. DEMAND CONTROL

31.1 In respect of Metering Points for which the User is Registered that relate to Exit Points on the Company's Distribution System, the Company and the User each undertake to comply with Schedule 8.

32. REVENUE PROTECTION

32.1 Where the Company provides a Revenue Protection Service to the User under this Agreement, it shall do so in accordance with the obligations of the 'Supplier' under the Revenue Protection Code of Practice. Charges for the services so provided shall be calculated in accordance with those specified as applicable to such services in the Relevant Charging Statement and shall be paid for as Transactional Charges in accordance with Clause 22. The Company may cease providing the Revenue Protection Service to the User under this Agreement, provided that the Company gives the User at least three months' advance notice of the date on which the Company will cease providing the Revenue Protection Service. The User may terminate a Revenue Protection Service that is provided by the Company under this Agreement, provided that the User gives the Company at least three months' advance notice of the date on which the User is to cease taking the Revenue Protection Service from the Company.

32B. ENERGY THEFT CONSOLIDATION

32B.1 The Panel shall make any and all arrangements necessary for, arising as a result of, or reasonably incidental to: (a) the deletion from this Agreement of Schedule 25 (Theft Risk Assessment Service), Schedule 26 (Energy Theft Tip-Off Service) and Schedule 30 (The Electricity Theft Detection Incentive Scheme); (b) Energy Theft Consolidation and the transfer of the Consolidated Theft Processes to the Retail Energy Code; and/or (c) Retail Code Consolidation and the transfer of the Revenue Protection Code of Practice to the Retail Energy Code. Such arrangements shall include the termination, novation, sale, transfer or other disposal of the contracts, data and other assets of DCUSA Ltd relating to the same.

32B.2 With effect from immediately prior to Energy Theft Consolidation, the following Schedules of this Agreement shall be deleted from this Agreement: Schedule 25 (Theft Risk Assessment Service), Schedule 26 (Energy Theft Tip-Off Service) and Schedule 30 (The Electricity Theft Detection Incentive Scheme). The ongoing rights and obligations of the Parties under those Schedules shall end on such deletion, but without prejudice to the rights and liabilities of each Party that accrued prior to such deletion (subject to Clause 32B.3).

32B.3 With effect from Energy Theft Consolidation, the following provisions shall apply:

32B.3.1 all accrued rights and liabilities of each Supplier Party and DNO/IDNO Party in connection with the Consolidated Theft Processes shall cease to be subject to this Agreement, and shall instead be treated as rights and liabilities under and subject to the Retail Energy Code (as described in the Retail Energy Code);

32B.3.2 DCUSA Ltd is released from all its outstanding obligations in respect of the Consolidated Theft Processes, and releases all its outstanding rights in respect of the Consolidated Theft Processes;

32B.3.3 notwithstanding Clause 32B.3.2, DCUSA Ltd shall provide all reasonable co-operation and assistance requested by the Retail Energy Code Company concerning the Consolidated Theft Processes; and

32B.3.4 notwithstanding Clause 32B.3.2, DCUSA Ltd (and the Secretariat) shall, under Schedule 30 (The Electricity Theft Detection Incentive Scheme) and in respect of the scheme year last ending prior to Energy Theft Consolidation, remain responsible for producing the scheme year summary report and for calculating and processing the incentive scheme debits and credits.

32B.4 With effect from immediately prior to Retail Code Consolidation, the following Schedules of this Agreement shall be deleted from this Agreement: Schedule 23 (Theft of Electricity Code of Practice) and Schedule 27

(Resolving Unregistered Consumers Code of Practice). The ongoing rights and obligations of the Parties under those Schedules shall end on such deletion, but without prejudice to the rights and liabilities of each Party that accrued prior to such deletion (subject to Clause 32B.5).

32B.5 With effect from Retail Code Consolidation, all accrued rights and liabilities of each Supplier Party and DNO/IDNO Party in connection with Schedules 23 (Theft of Electricity Code of Practice) and 27 (Resolving Unregistered Consumers Code of Practice) shall cease to be subject to this Agreement, and shall instead be treated as rights and liabilities under and subject to the Retail Energy Code (as described in the Retail Energy Code).

33. GUARANTEED PERFORMANCE STANDARDS

Compensation

33.1 To the extent that, due to an act or omission on the part of the Company, compensation would be payable by the User pursuant to the ESPR to a Customer, the Company shall make an equivalent compensation payment to the User for the benefit of the Customer in accordance with the provisions of this Clause 33.

33.2 Where electricity flows from the Company's Distribution System into the Distribution System of another DNO Party or IDNO Party and, due to an act or omission on the part of the Company, compensation would be payable by the User pursuant to the ESPR to a Customer connected to that other Party's Distribution System, the Company undertakes either to make an equivalent compensation payment directly to the User for the benefit of the Customer, or to arrange for that other Party to make such payment. The Company's liability under this Clause 33.2 shall be subject to such apportionment of responsibilities as is agreed between the Company and that other Party pursuant to Section 2B.

33.3 To the extent that, due to circumstances other than those described in Clause 33.1 or 33.2, compensation pursuant to the ESPR would be payable to the Customer by the Company, the Company shall not be liable to make any payment to the User for the benefit of the Customer.

Terms and Procedures of ESPR

33.4 In the circumstances described in Clause 33.1 or 33.2, the Company will comply with the terms and procedures of the ESPR provided that:

33.4.1 the User shall be deemed to be a "person having apparent authority to represent the Customer" for the purposes of ESPR regulation 3(2)(d) if the Customer independently contacts the User in relation to a matter which forms the basis of the Customer's claim under the ESPR; and

33.4.2 where the ESPR require the Company to "pay to the customer the Prescribed Sum", the Company shall pay the User the Prescribed Sum for the benefit of the Customer and the User shall pass the payment on to the Customer as soon as is reasonably practicable.

33.5 If the Customer contacts the User in relation to a matter which might form the basis of a claim under the ESPR, the User shall diligently record the details of the Customer's complaint and shall not agree or imply that the Customer's complaint is valid unless the matter is one which would be governed by Clause 33.3. If the matter is one which in the User's reasonable opinion will be governed by Clause 33.1 or 33.2, the User shall pass on the details of the Customer's complaint to the Company as soon as is reasonably practicable together with details of the Customer's name and address. In such circumstances, the Prescribed Period will relate to the time at which the Customer or the User on behalf of the Customer contacts the Company, and the time at which the Customer contacts the User will not be relevant to the calculation of the Prescribed Period.

33.6 If the Customer contacts the Company in relation to a matter which might form the basis of a claim under the ESPR, the Company shall diligently record the details of the Customer's complaint and shall not agree or imply that the Customer's complaint is valid unless the matter is one which would be governed by Clause 33.1 or 33.2. If the matter is one which in the Company's reasonable opinion will be governed by Clause 33.3, the Company shall tell the Customer to contact the User direct. In such circumstances, the Prescribed Period will relate to the time at which the Customer contacts the User and the time at which the Customer contacts the Company will not be relevant to the calculation of the Prescribed Period.

33.7 When the User has received a payment from the Company pursuant to Clause 33.4.2, the User shall pass such payment to the Customer as soon as reasonably practicable and if, due to the User's delay, an additional payment becomes due pursuant to ESPR regulation 19(5), then this additional payment shall be the liability of the User.

Other Matters

33.8 Neither the Company nor the User shall lead a Customer to believe that the Customer has a valid claim for a guaranteed standard payment by reason of the action or default of the other. Where, however, a Customer does have a valid claim, a breach of the provisions of this Clause 33.8 shall not excuse the Party against whom the claim lies from making the relevant payment.

33.9 In the event of a dispute between the Company and the User as to which of them is liable to pay compensation pursuant to Clause 33.1 or 33.3, in the first instance the Company shall make the compensation payment for the benefit of the Customer and then the dispute shall be referred to the Authority and shall be deemed to be a dispute which may be referred to the Authority by either the Company or the User in accordance with Section 39B of the Act and ESPR regulation 18, and the provisions as to practice and procedure contained in ESPR schedule 3 shall be deemed to apply to any such dispute.

33.10 The Company shall from time to time provide the User with a report on its performance against the ESPR on the standards of performance.

34. CONFIDENTIALITY RESTRICTIONS ON THE COMPANY

Confidential Information

34.1

In this Clause 34, **Confidential Information** means any information which the Company or any Affiliate or Related Undertaking of the Company:

34.1.1 receives from the User under this Agreement; or

34.1.2 holds in respect of a Connectee and is information which it has acquired in its capacity as the operator of the Distribution Business; or

34.1.3 receives from any Connectee, which, if received from the User, would fall within Clause 34.1.1; or

34.1.4 receives from the User in error, but which would usually be considered to be confidential

and the provisions of this Clause 34 shall apply to such Confidential Information, save where the User notifies or otherwise gives prior written agreement to the Company that such Confidential Information need not be treated as confidential.

Restrictions on Use and Disclosure

34.2 Where the Company or any Affiliate or Related Undertaking of the Company receives or acquires Confidential Information, the Company shall (and shall procure that such Affiliate or Related Undertaking shall):

34.2.1 not use the Confidential Information for any purpose other than as required or expressly permitted under this Agreement or any other agreement entered into between the Company and the User for the provision of services by the Distribution Business of the Company;

34.2.2 without prejudice to Clause 34.2.1, not use the Confidential Information in a manner which may obtain for the Company or any Affiliate or Related Undertaking of the Company (as the case may be) any commercial advantage in the operation of a Supply Business except, in relation to information falling within Clause 34.1.2, where the Company supplied electricity to the relevant Connectee at the time the information was acquired by the Company;

34.2.3 not authorise access to nor disclose any Confidential Information other than:

A. to such of the employees of the Company or any Affiliate or Related Undertaking of the Company as require to be informed thereof for the effective performance of the Company's obligations under this Section 2A or any other agreement entered into between the Company and the User for the provision of services by the Distribution Business of the Company or for the effective operation of the Distribution Business;

B. to such agents, consultants, professional or other advisors, and contractors as require to be informed thereof or to provide advice which is in connection with the operation of the Distribution Business;

C. to the Authority;

D. information which the Company or any Affiliate or Related Undertaking of the Company (as the case may be) is required or permitted to make disclosure of:

i. in compliance with the duties of the Company or any Affiliate or Related Undertaking of the Company (as the case may be) under the Act or any other requirement of a Competent Authority;

ii. in compliance with the provisions of any Relevant Instruments;

iii. in compliance with any other requirement of law;

iv. in response to a requirement of any Stock Exchange or the Panel on Takeovers and Mergers or any other regulatory authority (whether or not similar to those bodies); or

v. pursuant to the arbitration rules of the Electricity Arbitration Association or pursuant to any judicial or other arbitral process or tribunal of competent jurisdiction;

E. in the case of information falling within Clause 34.1.2, to the person who supplied electricity to the relevant Customer or purchased electricity from the relevant Generator at the time at which such information was acquired by the Company; or

F. for the purposes of providing to a Connectee (or, with the Connectee's permission, its contractor or agent) details of the Use of System Charges (and/or the related tariffs, estimated charges or elements from which the charges are constructed) which are or may be applicable to that Connectee's Metering Points and/or Metering Systems; and

34.2.4 take all reasonable steps to ensure that any such person as is referred to in sub-clauses 34.2.3(A), (B) and (E) to whom the Company or any Affiliate or Related Undertaking of the Company (as the case may be) discloses Confidential Information does not use that Confidential Information for any purpose other than that for which it was provided and does not disclose that Confidential Information otherwise than in accordance with the provisions of this Clause 34.

Other Matters

34.3 Not Used.

34.4 The User agrees that where the Company uses or discloses Confidential Information in accordance with this Clause 34, such Confidential Information need not be treated as confidential for the purposes of Condition 42 of the Distribution Licence to the extent of such use or disclosure.

34.5 The Company undertakes that, in any case where information to be disclosed by it under this Agreement may lawfully be disclosed only with the prior consent of the person to whom the information relates, it will use its reasonable endeavours to obtain such prior consent so as to enable it, or the User as the case may be, promptly to perform its obligations under this Section 2A, provided that where the consent of the Connectee is required to be obtained for the purposes of this Section 2A, the User (and not the Company) shall have the obligation to obtain such consent under Clause 35.6.

35. CONFIDENTIALITY RESTRICTIONS ON THE USER

Confidential Information

35.1 In this Clause 35, **Confidential Information** means:

35.1.1 any information (whether in writing, in disc or electronic form, or otherwise) which has been properly disclosed by the Company under this Agreement but which would usually be considered to be confidential (but shall not include any information relating to a Connectee which has been collected by the Company and disclosed to the User pursuant to this Section 2A); and

35.1.2 any information which is marked as confidential or which is provided together with a covering letter indicating its confidential nature,

and, to the extent that any Affiliate or Related Undertaking of the User is in possession of Confidential Information, the User shall procure that such Affiliate or Related Undertaking observes the restrictions in Clauses 35.2 to 35.4 (inclusive) as if in each such Clause there was substituted for the User the name of the Affiliate or Related Undertaking.

Restrictions on Use and Disclosure

35.2 The User hereby undertakes to the Company that it will preserve the confidentiality of, and not directly or indirectly reveal, report, publish, disclose or transfer or use for its own purposes, Confidential Information except:

35.2.1 in the circumstances set out in Clause 35.3;

35.2.2 to the extent otherwise required or expressly permitted by this Agreement or any other agreement entered into between the Company and the User for the provision of services by the Distribution Business of the Company; or

35.2.3 with the prior consent in writing of the Company.

35.3 The circumstances set out in this Clause 35.3 are:

35.3.1 where the Confidential Information, before it is furnished to the User, is in the public domain;

35.3.2 where the Confidential Information:

A. is acquired by the User in circumstances in which this Clause 35 does not apply;

B. is acquired by the User in circumstances in which this Clause 35 does apply and thereafter ceases to be subject to the restrictions imposed by this Clause 35; or

C. (after it is furnished to the User) enters the public domain,

otherwise (in any such case) than as a result of (i) a breach by the User of its obligations in this Clause 35; or (ii) a breach by the person who disclosed that Confidential Information of that person's confidentiality obligation, and the User is aware of such breach;

35.3.3 if the User is required or permitted to make disclosure of the Confidential Information to any person:

A. in compliance with the duties of the User under the Act or any other requirement of a Competent Authority;

B. in compliance with the provisions of any Relevant Instrument;

C. in compliance with any other law or regulation;

D. in response to a requirement of any Stock Exchange or the Panel on Takeovers and Mergers or any other regulatory authority (whether or not similar to those bodies); or

E. pursuant to the rules of the Electricity Arbitration Association or pursuant to any judicial or arbitral process or tribunal of competent jurisdiction;

35.3.4 the disclosure of Confidential Information to any Affiliate or Related Undertaking of the User, to the employees, directors, agents, consultants and professional advisers of the User or any Affiliate or Related Undertaking of the User, and to any Relevant Exempt Supplier, in each case on the basis set out in Clause 35.4; or

35.3.5 the disclosure of Confidential Information to the extent that the Confidential Information is required to be disclosed by the User for the purposes of providing billing information to Connectees.

35.4 The User shall take all reasonable steps to ensure that any such person as is referred to in Clause 35.3.4 to whom the User discloses confidential information does not use that confidential information for any purpose other than that for which it is provided and does not disclose that confidential information otherwise than in accordance with this Clause 35.

Other Matters

35.5 Not Used.

35.6 The User undertakes that, in any case where information to be disclosed under this Agreement may lawfully be disclosed only with the prior consent of the person to whom the information relates, it will use its reasonable endeavours to obtain (where appropriate, through its Supply Contracts and Power Purchase Contracts) such prior consent so as to enable it or (as the case may be) the Company promptly to perform its obligations under this Section 2A.

35A. PROVISION OF COST INFORMATION REVIEW PACK

35A.1 This Clause 35A shall only apply where the Company is a DNO Party.

35A.2 The Cost Information Review Pack (or CIRP) is to be published on behalf of each DNO Party, and updated where necessary, in accordance with this Clause 35A.

35A.3 By the final day of May, September and the month of final publication of tariffs in each year, each DNO Party shall provide an updated copy of the CIRP, including Table 1 and Table 2 (as defined in Schedule 20), to the Secretariat using the document templates identified in Schedule 20.

35A.4 On each occasion that the DNO Party provides an updated CIRP to the Secretariat pursuant to Clause 35A.3, the DNO Party shall also provide an accompanying written commentary to assist in the understanding of the data presented within Table 1 and Table 2 and an explanation of the reasons behind any changes made to the CIRP (in the Tables or otherwise) since the last CIRP was prepared.

35A.5 The Secretariat shall, within three Working Days of receiving the updated CIRP and accompanying written commentary pursuant to Clause 35A.4, publish the updated CIRP and accompanying written commentary on the Website.

35A.6 The Secretariat shall, on the first Thursday which falls no less than 15 Working Days following publication of an updated CIRP and accompanying written commentary in accordance with Clause 35.A.5, convene a meeting (which may be held by telephone conference) to which all Supplier Parties and IDNO Parties are invited. At such meeting, the DNO Party shall provide an oral commentary to assist those attending to understand the data presented within its most recently submitted Tables within the CIRP and an explanation of the reasons behind any changes made to the CIRP (in the Tables or otherwise) since the last CIRP was prepared. The DNO Party shall ensure that the Supplier Parties and the IDNO Parties attending the meeting are given the opportunity to ask questions regarding their updated CIRP, and the DNO Party shall use reasonable endeavours to provide a response to those questions related to its updated CIRP.

35A.7 Where the Use of System Charges to be charged by the DNO Party from April in any year differ from the indicative charges set out in the DNO Party's CIRP published pursuant to Clause 35A.5, then the DNO Party shall (at least 40 days prior to the date from which such charges are to have effect) resubmit an updated CIRP to the Secretariat.

35A.8 The Secretariat shall, within five days of receiving any updated CIRP pursuant to Clause 35A.7, publish the updated CIRP on the Website.

35C. PROVISION OF AN EMBEDDED CAPACITY REGISTER

35.C.1 This Clause 35C shall apply whether the Company is a DNO Party or an IDNO Party.

35.C.2 The Company shall create, maintain and publish on its website an Embedded Capacity Register for its Distribution System, which (subject to Clause 35C.6):

35C.2.1 lists those sites which are connected to the Company's Distribution System (or which are the subject of an accepted connection offer to be connected to the Distribution System), and which (A) have a Maximum Import Capacity of any size and are subject to a DSR Contract of 50kW or more; and/or (B) have a Maximum Export Capacity of any size and generation equipment with a Registered Capacity of 50kW or more;

35C.2.2 subject to Clause 35C2.3, contains the data items required under Schedule 31 (Embedded Capacity Register); and

35C.2.3 in the case of sites owned and/or occupied by living individuals (for which purpose, sites with a DSR Contract of less than 1 MW or generation equipment with a Registered Capacity of less than 1 MW, will be deemed to be owned and/or occupied by a living individual unless the Company holds positive evidence to the contrary) will have the following data items redacted:

A. customer name – redacted
B. customer site – redacted
C. address line 1 – redacted
D. address line 2 – redacted
E. postcode – the last 2 letters redacted
F. location (x-coordinate) – redacted
G. location (y-coordinate) - redacted.

35.C.3 Within 10 Working Days following the end of each month, the Company shall, publish an updated Embedded Capacity Register using the latest available information it holds as at the end of that month.

35C.4 For the purposes of Clause 35C.3, the latest available information with respect to sites shall include:

a. accepted applications pertaining to a request to (i) alter the characteristics of the physical assets at the site; and/or (ii) alter any of the contractual terms and conditions that apply to the site;

b. accepted connection offers for new connections to the Company's Distribution System; and

c. any necessary changes as a result of the Company (i) being notified that previously held information pertaining to a site was incorrect; and/or (ii) having been notified of the correct information.

35.C.5 Where, in accordance with the provisions of Schedule 31, the Company has been notified that the required format and/or data items of the Embedded Capacity Register have been altered, then the Company shall ensure that it makes such alterations with effect from the next version of its Embedded Capacity Register that it publishes (or, if applicable, with effect from such later date from which such alteration is specified pursuant to Schedule 31 to have effect).

35C.6 Until 2 November 2023, the Company shall have the option to either comply with Clause 35C.2.1 as written or alternatively to comply with Clause 35C.2.1 as if it read as follows: "lists those sites which are connected to the Company's Distribution System (or which are the subject of an accepted connection offer to be connected to the Distribution System), and which: (A) have an import capacity of 1 MW or more and are subject to a DSR Contract; and/or (B) have an export capacity of 1 MW or more".

SECTION 2.B - DISTRIBUTOR TO DISTRIBUTOR/OTSO RELATIONSHIPS

SCOPE OF SECTION 2B

This Section 2B and the Schedules referred to in it, together with the relevant Bilateral Connection Agreement, set out the terms and conditions pursuant to which a DNO/IDNO Party shall allow the System of a DNO/IDNO/OTSO Party to Connect to the DNO/IDNO Party's Distribution System, and pursuant to which the DNO/IDNO Party shall provide Use of Distribution System to the DNO/IDNO/OTSO Party.

36. INTERPRETATION OF SECTION 2B

Party Obligations

36.1 In this Section 2B, in the Schedules when applied pursuant to this Section 2B, and in the terms defined in Clause 1 when used in this Section 2B or those Schedules, a reference to a Company is a reference to each Party, separately and individually, that is a DNO/IDNO Party acting in the capacity of a Party who provides Connection and Use of Distribution System to a DNO/IDNO/OTSO Party and, where an obligation is imposed on, or a right granted to, a Company, that obligation is imposed on, and that right is granted to, each such DNO/IDNO Party separately and independently.

36.2 In this Section 2B, in the Schedules when applied pursuant to this Section 2B, and in the terms defined in Clause 1 when used in this Section 2B or those Schedules, a reference to a User is:

36.2.1 a reference to each DNO/IDNO/OTSO Party, separately and individually, acting in the capacity of a Party who receives Connection and Use of Distribution System from a DNO/IDNO Party, and where an obligation is imposed on, or a right granted to, a User, that obligation is imposed on, and that right is granted to, each such DNO/IDNO/OTSO Party separately and independently; and

36.2.2 when made in relation to a Company and any period of time, a reference to each User (separately, individually and to the relevant extent) who is (or was), during that period, Connected to that Company's Distribution System (provided that, in the case of Clauses 36, 37, 38, 39 and 47, it shall include those Users who are taking steps to be so Connected, and that, in the case of Clauses 36, 38, 47, 50 and 51, it shall include those Users who were once so Connected).

36.3 This Section 2B, and the Schedules when applied pursuant to it, shall, together with the relevant Bilateral Connection Agreement:

36.3.1 only create rights and obligations between DNO Parties/IDNO Parties and other DNO Parties/IDNO Parties, and shall not apply to Supplier/CVA Registrants;

36.3.2 only create obligations between a Company and a User to the extent that, and in relation to those periods for which, the User is (or was) or is seeking to be Connected via a Connection Point to the Company's Distribution System; and

36.3.3 not impose any obligations between a Company and a User in relation to periods for which that User is (or was) not, and is not seeking to be, Connected via a Connection Point to the Company's Distribution System.

References in Relation to Companies and Users

36.4 In this Section 2B, in the Schedules when applied pursuant to this Section 2B, and in the relevant Bilateral Connection Agreement, references to:

36.4.1 a Connection Point are references to a Connection Point between the Company's Distribution System and the User's System;

36.4.2 a Connectee are, when made in relation to the Company or the Company's Distribution System, references to a Connectee to the Company's Distribution System, and, when made in relation to the User or the User's System, references to a Connectee to the User's System; and

36.4.3 Charges are references to the Charges payable by the User to the Company in relation to Connection Points on the Company's Distribution System.

Additional Interpretation

36.5 In this Section 2B, in the Schedules when applied pursuant to it, and in the relevant Bilateral Connection Agreement, any reference to a "charging period" is, subject to any contrary indication, a reference to the period specified in the Relevant Charging Statement (or, if no period is specified therein, a calendar month).

Disputes

36.6 Notwithstanding Clause 58, any dispute between the Company and the User arising under, out of, or in connection with this Section 2B or a relevant Bilateral Connection Agreement will not be referred to arbitration unless:

36.6.1 the relevant provision of this Section 2B expressly provides for arbitration; or

36.6.2 the Company and the User agree to refer the dispute to arbitration.

37. CONDITIONS PRECEDENT

37.1 The rights and obligations of each Company as against each User (and of each User as against each Company) under the remaining Clauses of this Section 2B (save for Clauses 50 and 51) are conditional upon each of the following conditions precedent being fulfilled:

37.1.1 that the User holds a Distribution Licence or is the OTSO Party;

37.1.2 that the Company holds a Distribution Licence;

37.1.3 that both the User and the Company are party to the Connection and Use of System Code and any necessary supplemental agreement pursuant to it;

37.1.4 that both the User (unless it is the OTSO Party) and the Company are party to the Retail Energy Code and the Data Transfer Service Agreement;

37.1.5 that both the User and the Company are party to the BSC; and

37.1.6 that both the User (unless it is the OTSO Party) and the Company are party to the Smart Energy Code.

37.2 If the conditions precedent set out in Clause 37.1.1 to 37.1.5 (inclusive) are not fulfilled in respect of a Company or a User at the date this Agreement becomes effective in respect of that Party, that Party shall take all appropriate steps within its power to procure the fulfilment of those conditions relating to it which have not already been fulfilled.

37.3 Once each of the conditions precedent in Clause 37.1 has been fulfilled in respect of a Company or a User, that Party shall take all appropriate steps within its power to keep such conditions precedent relating to it fulfilled.

38. BILATERAL CONNECTION AGREEMENTS

New Bilateral Connection Agreements

38.1 Where requested by the User or its agent, the Company shall offer to enter into a Bilateral Connection Agreement with the User in respect of each relevant Connection Point or group of Connection Points. Such offer shall be made as soon as is practicable and within any period required by the Company's Distribution Licence or the Act.

38.2 Where either the Company or the User disputes the terms of the Bilateral Connection Agreement either of them shall be entitled to refer the dispute to the Authority in accordance with the provisions of Condition 7 of the Company's Distribution Licence.

38.3 In the event that:

38.3.1 the System of one DNO/IDNO/OTSO Party is connected to the Distribution System of a DNO/IDNO Party (so that, subject to energisation, electricity may flow between the two); but

38.3.2 there is no written agreement between them regarding such connection,

either of them may, on notice to the other, require such other to (as applicable) enter into, or offer to enter into, a Bilateral Connection Agreement in respect of the point of such connection. Where no such Bilateral Connection Agreement can be agreed within a reasonable period of time, either of them may (save where pending determination of a dispute referred to the Authority in respect of such point of connection) de-energise or disconnect such point of connection.

Deemed Bilateral Connection Agreements

38.4 In the event that:

38.4.1 the System of one DNO/IDNO/OTSO Party is connected to the Distribution System of a DNO/IDNO Party (so that, subject to energisation, electricity may flow between the two); but

38.4.2 there is no written agreement between them regarding such connection,

those two Parties agree that the limitations on liability set out in Clause 53 shall apply in relation to such connection.

38.5 Where a party to a Bilateral Connection Agreement (a "**disposing party**") disposes of the Distribution System (or relevant part thereof) relating to one or more of the Connection Points that are subject to that Bilateral Connection Agreement, the disposing party shall notify the other party to that Bilateral Connection Agreement (the "**continuing party**").

38.6 Where the person (the "**acquiring party**") who acquires such Distribution System (or part thereof) is a Party to this Agreement:

38.6.1 it shall notify the continuing party of such acquisition; and

38.6.2 it is agreed that (subject to any contrary agreement between the continuing party and the acquiring party) the continuing party and the acquiring party shall (with effect from the time of acquisition) have the benefit of, and be subject to, a Bilateral Connection Agreement on identical

terms to that referred to in Clause 38.5 (insofar as applicable to the Connection Points referred to in Clause 38.5).

Breach of Bilateral Connection Agreements

38.7 Without prejudice to Clauses 39.1.1 and 40.1.2, a breach of a Bilateral Connection Agreement is not, of itself, a breach of this Agreement.

38.A. CURTAILMENT

38.A.1 This Clause 38A shall apply:

38.A.1.1 where the User is required to offer a Curtailable Connection to a Connectee to the User's System, and where the reason for the Curtailable Connection is (in whole or part) due to the Company's Distribution System; or

38.A.1.2 the User adopts a connection to a Connectee which is (or was) subject to a Curtailable Connection Offer, and which has not yet been converted to a Non-Curtailable Connection.

38.A.2 The User must not make a Curtailable Connection as referred to in Clause 38A.1.1 or adopt a connection as referred to in Clause 38A.1.2 unless the User has agreed a Curtailable Connection Agreement with the Connectee using the terms set out in Appendix B of Schedule 2D.

38.A.3 Where this Clause 38A applies, the Company shall specify, in the Bilateral Connection Agreement with the User, the following parameters with regard to the Curtailable Connection(s) to enable the User to be (and remain) connected to the Company's System. The Company shall calculate these parameters in accordance with the same rules as apply to customers connecting to the Company's Distribution System in accordance with Schedule 2D.

38.A.3.1 Company Non-Curtailable Import Capacity: in kVA

38.A.3.2 Company Non-Curtailable Export Capacity: in kVA

38.A.3.3 Company Curtailable Import Capacity: in kVA

38.A.3.4 Company Curtailable Export Capacity: in kVA

38.A.3.5 Company Curtailment End Date: [DD/MM/YYYY]

38.A.3.6 Company Import Curtailment Limit: in hours

38.A.3.7 Company Export Curtailment Limit: in hours

38.A.3.8 Company Exceeded Import Curtailment Price (subject to change): in £/MVAh

38.A.3.9 Company Exceeded Export Curtailment Price (subject to change): in £/MVAh.

38.A.4 The Company may instruct the User to Curtail the Curtailable Connection (a "Curtailment Instruction") at any time during the Company Curtailment Period, and the User shall comply with any instruction received under this Clause 38A.4. The Company shall notify the User when the need to Curtail has finished. The details on how the Company instructs the User shall be set out in the Bilateral Connection Agreement.

38.A.5 As an alternative to instructing the User to Curtail in accordance with Clause 38A.4, the Company and the User may agree a flexibility services agreement to provide a similar benefit to the Company. The details of any such flexibility services agreement shall be included in the Bilateral Connection Agreement.

38.A.6 The Company shall not instruct the User to reduce the import or export capacity of the Curtailable Connection(s) under a Bilateral Connection Agreement to less than the Company Non-Curtailable Import Capacity or the Company Non-Curtailable Export Capacity (respectively), and the User is not obliged to instruct the Curtailable Connection(s) to reduce to below these levels even if the Company instructs it to do so.

38.A.7 Where the Company wishes to change the parameters listed at Clause 38A.3, the Company shall do so in accordance with the provisions of Schedule 2D. The User will accept such changes made in accordance with Schedule 2D and shall ensure that changes are reflected in the Curtailable Connection Agreement with the Connectee.

38.A.8 The Company shall use its reasonable endeavours to ensure that the Company Full Import Curtailment Hours do not exceed the Company Import Curtailment Limit and the Company Full Export Curtailment Hours do not exceed the Company Export Curtailment Limit.

38.A.9 The Company Full Import Curtailment Hours and Company Full Export Curtailment Hours shall be calculated at the end of each Quarter in the same way as applies to the calculation of Full Import Curtailment Hours and Full Export Curtailment Hours under and in accordance with Schedule 2D.

38.A.10 If the Company Full Import Curtailment Hours exceed the Company Import Curtailment Limit, and/or the Company Full Export Curtailment Hours exceed the Company Export Curtailment Limit, then the Company shall make annual Exceeded Import Curtailment Payment and/or annual Exceeded Export Curtailment Payment to the User in accordance with the provisions of Schedule 2D within 30 days following the end of the relevant Quarter.

38.A.11 In this Clause 38A, unless the context otherwise requires, the expressions below shall have the meanings set out below:

Company Full Export Curtailment Hours	means the value calculated in the same way as 'Full Export Curtailment Hours' under Paragraph 3.2 of Schedule 2D (which relates to the Curtailment of the Company's Distribution System).
Company Full Import Curtailment Hours	means the value calculated in the same way as 'Full Import Curtailment Hours' under Paragraph 3.1 of Schedule 2D (which relates to the Curtailment of the Company's Distribution System).
Company Export Curtailment Limit	means the number of full hours per annum (measured over a twelve-month period) during which the User could be required to reduce the Connectee's Maximum Export Capacity to the Company Non-Curtailable Export Capacity (which relates to the Curtailment on the Company's Distribution System).
Company Import Curtailment Limit	means the number of full hours per annum (measured over a twelve-month period) during which the User could be required to reduce the Connectee's Maximum Import Capacity to the Company Non-Curtailable Import Capacity (which relates to the Curtailment on the Company's Distribution System).
Exceeded Export Curtailment Payments	means the amount payable to the User calculated in the same way as 'Export Curtailment Payments' under Paragraph 3.4 of Schedule 2D (which relates to the Curtailment of the Company's Distribution System).
Exceeded Import Curtailment Payments	means the amount payable to the User calculated in the same way as 'Import Curtailment Payments' under Paragraph 3.3 of Schedule 2D (which relates to the Curtailment of the Company's Distribution System).
Company Non-Curtailable Export Capacity	means in respect of a Bilateral Connection Agreement, the amount of export capacity (expressed in kW or kVA) which the User is permitted to use that is not subject to Curtailment on the Company's Distribution System.
Company Non-Curtailable Import Capacity	means, in respect of a Bilateral Connection Agreement, the amount of import capacity (expressed in kW or kVA) which the User is permitted to use that is not subject to Curtailment on the Company's Distribution System.
Company Curtailable Export Capacity	means, in respect of a Bilateral Connection Agreement, the Maximum Export Capacity less the Company Non-Curtailable Export Capacity.
Company Curtailable Import Capacity	means, in respect of a Bilateral Connection Agreement, the Maximum Import Capacity less the Company Non-Curtailable Import Capacity.

Company Curtailment End Date	means, in respect of a Curtailable Connection, the date that the Company has agreed to make the Curtailable Connection a Non-Curtailable Connection.
Company Curtailment Period	means, in relation to a Curtailable Connection, the period between the date of its Energisation until the Company Curtailment End Date.
Company Exceeded Export Curtailment Price	means the price calculated in the same way as the 'Exceeded Export Curtailment Price' under Paragraph 6 of Schedule 2D (which relates to the Curtailment of the Company's Distribution System).
Company Exceeded Import Curtailment Price	means the price determined in the same way as the 'Exceeded Import Curtailment Price' under Paragraph 6 of Schedule 2D (which relates to the Curtailment of the Company's Distribution System).
Curtail/Curtailment	means any action taken by the Company to restrict the flow of electricity at the Connection Point, except where that restriction is caused by (a) an Interruption; and/or (b) curtailment as a result of constraints on the transmission network.
Curtailable Connection	means a connection to the User's System which is made on the basis that it is expressly subject to Curtailment (and for which the connection application was received on or after 1 April 2023).
Curtailable Connection Agreement	means the agreement between the User and the Connectee on the terms set out in accordance with Paragraph 8 and Appendix 2 of Schedule 2D.
Curtailable Connection Offer	means a connection offer to provide a Curtailable Connection.

39. THE USER'S RIGHT TO BE CONNECTED AND ENERGISED

39.1 The obligation of the Company to Connect the relevant Connection Point or Connection Points to its Distribution System, and to Energise the relevant Connection Point or Connection Points, is subject to:

39.1.1 the User entering into a Bilateral Connection Agreement with the Company in respect of such Connection Points and such agreement being in full force and effect (and any conditions precedent therein being satisfied);

39.1.2 the User and the Company having exchanged such contact, invoicing and other similar information as the other reasonably requests and agreeing arrangements for the provision of Use of Distribution System information to the Company; and

39.1.3 where the Connection Point is a Systems Connection Point, such Connection Point being registered in accordance with the provisions of the BSC.

39.2 Subject to the provisions of this Section 2B and the relevant Bilateral Connection Agreement, the Company shall Connect the User's System at each of the relevant Connection Points, and Energise each such Connection Point.

39.3 Subject to the provisions of this Section 2B and the relevant Bilateral Connection Agreement, the Company shall use its reasonable endeavours to:

39.3.1 ensure the Maximum Import Capacity and the Maximum Export Capacity is available to the User at all times; and

39.3.2 maintain the connection characteristics at the Connection Point in accordance with the provisions of the relevant Bilateral Connection Agreement.

Land Rights

39.4 In respect of each Connection Point, where either the Company has Connection Assets installed on property under the control of the User, or the User has Connection Equipment installed on the property of the Company then the Company and the User shall agree appropriate arrangements in respect of the rights to place such Connection Equipment or Connection Assets on the property of the other and to operate such Connection Assets or Connection Equipment. Such agreement will be part of the relevant Bilateral Connection Agreement or in an agreement pursuant to the relevant Bilateral Connection Agreement.

Access Rights

39.5 In respect of each Connection Point and subject to the other provisions of this Section 2B and the relevant Bilateral Connection Agreement, where the Company has Connection Assets installed on property under the control of the User, the User shall provide the Company, its invitees and any relevant employee, agent or contractor acting on behalf of the Company, with safe and unobstructed access at all times to such Connection Assets together with such facilities as the Company may reasonably request and the User may reasonably be expected to provide. The Company shall procure that any individuals to whom access is given pursuant to this Clause 39.5 shall comply with all reasonable directions given by the User as to general safety and site security arrangements.

39.6 In respect of each Connection Point and subject to the other provisions of this Section 2B and the relevant Bilateral Connection Agreement where the User has Connection Equipment installed on property under the

control of the Company, the Company shall provide the User, its invitees and any relevant employee, agent or contractor acting on behalf of the User, with safe and unobstructed access at all times to such Connection Equipment together with such facilities as the User may reasonably request and the Company may reasonably be expected to provide. The User shall procure that any individuals to whom access is given pursuant to this Clause 39.6 shall comply with all reasonable directions given by the Company as to general safety and site security arrangements.

Maintenance of Assets

39.7 Subject to the terms of this Agreement and the relevant Bilateral Connection Agreement (and without prejudice to Company's rights to make Modifications) the Company and the User shall use all reasonable endeavours to maintain their respective Connection Equipment relating to the Connection Point in the condition necessary to render the Connection Point fit for the purpose of conveying electricity in accordance with this Agreement and the relevant Bilateral Connection Agreement.

39.8 Subject to the relevant Bilateral Connection Agreement, the Company and the User each acknowledges that the other may use, in relation to its System, whatever equipment of whatever nature it considers appropriate, provided the same complies with all Relevant Instruments, legislative requirements and Directives.

Maximum Import Capacity and Maximum Export Capacity

39.9 The Maximum Import Capacity and Maximum Export Capacity shall be specified in the relevant Bilateral Connection Agreement and the User shall use its reasonable endeavours to ensure that the electricity imported and exported does not exceed the Maximum Import Capacity and the Maximum Export Capacity (respectively).

39.10 The Company shall only be obliged to export or import electricity up to the Maximum Import Capacity and Maximum Export Capacity as specified in the relevant Bilateral Connection Agreement. Where the User exceeds the Maximum Import Capacity or the Maximum Export Capacity, it shall be a breach of the relevant Bilateral Connection Agreement, but not of this Agreement.

39.11 Where the User's import of electricity exceeds the Maximum Import Capacity or the User's export of electricity exceeds the Maximum Export Capacity (each an "**Event**"), the User shall:

39.11.1 upon being notified by the Company, take reasonable actions to reduce the import or export of electricity to within the limits specified in the relevant Bilateral Connection Agreement; and

39.11.2 if appropriate propose a variation to the relevant Bilateral Connection Agreement; and/or

39.11.3 if appropriate, submit a Modification Application to the Company in accordance with the provisions of Clause 52.

39.12 Following the occurrence of an Event (as defined in Clause 39.11), the Company shall be entitled to:

39.12.1 charge the User any additional Use of System Charges for Use of Distribution System that is in excess of the Maximum Import Capacity or Maximum Export Capacity in accordance with the Company's Relevant Charging Statement;

39.12.2 exercise any rights it may have under Clause 41; and/or

39.12.3 exercise any rights it may have under the relevant Bilateral Connection Agreement.

Variation to the Maximum Import Capacity and Maximum Export Capacity

39.12A Except where a variation requires a Modification, either Party may propose a variation to the Maximum Import Capacity and/or Maximum Export Capacity contained within the Bilateral Connection Agreement by notice in writing to the other Party. The Company and the User shall negotiate in good faith the terms of any such variation.

39.12B Where the Bilateral Connection Agreement includes a phased 'Required Capacity'for the 'Development Phase' (as each such expression is defined in Schedule 22), any proposal to vary the Bilateral Connection Agreement made pursuant to Clause 39.12A shall take into account the capacity required for the remainder of such Development Phase, as set out in the Bilateral Connection Agreement.

Phase Balance

39.13 The User shall ensure, as far as is reasonably practicable, that the flow of electricity at each Connection Point is balanced between the phases.

Power Factor

39.14 The User shall at all times and at its own expense take reasonable steps to maintain the power factor of any supply of electricity through each Connection Point is between unity and 0.95 lagging unless otherwise agreed with the Company in the relevant Bilateral Connection Agreement. Any capacitors or other devices provided by the User for power factor improvement purposes shall be controlled so as to ensure that (unless otherwise agreed between the Company and the User) the total capacitance connected to the User's System at any time is not greater than that required to produce a power factor of unity at that time.

39.15 Nothing in Clause 39.14 shall require the User to treat any Customer taking a supply of electricity from its System less favourably than equivalent Customers taking supplies of electricity from the Company's Distribution System are treated by the Company in equivalent circumstances.

Interference

39.16 Unless otherwise agreed, the Company and the User shall each ensure that it and its respective employees, contractors, agents and invitees do not alter or interfere in any way with the Connection Equipment of the other.

40. USE OF DISTRIBUTION SYSTEM

Provision of Use of Distribution System

40.1 Subject to the other provisions of this Agreement, the Company shall convey electricity through its Distribution System, for the User, to and from each Connection Point subject to:

40.1.1 the Company and the User being party to this Agreement and it being in full force and effect;

40.1.2 there being a Bilateral Connection Agreement in full force and effect between the Company and the User in respect of such Connection Point (and any conditions precedent therein being and remaining satisfied);

40.1.3 the Maximum Import Capacity (if any) or the Maximum Export Capacity (if any) set out in the relevant Bilateral Connection Agreement;

40.1.4 where the Connection Point is a Systems Connection Point, a Meter Operator Agent being (and remaining) appointed; and

40.1.5 such variations (if any) as may be permitted by the Regulations or as otherwise agreed in the relevant Bilateral Connection Agreement.

Provision of Loss Adjustment Factors

40.2 The Company shall provide loss adjustment factors to the User:

40.2.1 in respect of each Connection Point to the Company's Distribution System that is not a Systems Connection Point, 20 Working Days before the User has to provide loss adjustment factors to the BSCCo in accordance with provisions of the BSC; and

40.2.2 in respect of each Connection Point to the Company's Distribution System that is a Systems Connection Point and where the User is the party responsible under the BSC for submitting the loss adjustment factors to BSCCo, 20 Working Days before the User has to provide loss adjustment factors to the BSCCo in accordance with provisions of the BSC.

41. ENERGISATION, DE-ENERGISATION AND RE-ENERGISATION

Company's Right to De-energise

41.1 The Company may De-energise a Connection Point:

41.1.1 if the Company is required to do so in an emergency and in accordance with Clause 41.4;

41.1.2 if the User is in material breach of the Bilateral Connection Agreement relating to such Connection Point and such breach results, or is likely to result, in the Company being in breach of the Regulations, the Company's Distribution Code, or any other relevant statutory requirement;

41.1.3 if the User is in breach of the Regulations, or is likely to be in material breach of the Regulations, or is likely to compromise the security of the Company's Distribution System or of any Distribution System or Offshore Transmission System connected to the Company's Distribution System or of the supply of electricity to any Connectee of the Company's;

41.1.4 if the Company is required to do so to comply with its obligations under the Company's Distribution Code or any Relevant Instruments;

41.1.5 subject to the terms of a replacement agreement, if this Agreement or the relevant Bilateral Connection Agreement is terminated, or the User ceases to be a Party in accordance with the provisions of Clause 54;

41.1.6 if the rights of the User are suspended in accordance with Clause 54.2;

41.1.7 if requested to do so by the User; or

41.1.8 if the Company is required to do so as part of a System Outage on its Distribution System carried out in accordance with its statutory rights and obligations and Good Industry Practice.

Notice Periods for De-energisation

41.2 Prior to De-energising a Connection Point pursuant to Clauses 41.1.2 to 41.1.4, the Company shall first give the User notice in writing, specifying:

41.2.1 the nature of the circumstances that have given rise to the right to De-energise;

41.2.2 the remedial works required to be carried out (as the Company reasonably determines) by the User or by the Company to remedy such circumstance; and

41.2.3 (where the User is to carry out such works) such reasonable period within which the User must carry out such works,

and the Company may only De-energise the Connection Point where the User fails to carry out the remedial works specified in such notice within the period specified in such notice.

41.3 In the case of Clause 41.1.2, the remedial works referred to in Clause 41.2.2 shall be undertaken at the cost of the User (who shall reimburse the Company where such works are undertaken by the Company). In the case of Clauses 41.1.3 and 41.1.4 and where the circumstance giving rise to the right to De-energise was caused by an act or omission of the User (or its employees, contractors or agents), the remedial works referred to in Clause 41.2.2 shall be undertaken at the cost of the User (who shall reimburse the Company

where such works are undertaken by the Company). In the case of Clauses 41.1.3 and 41.1.4 and where the circumstance giving rise to the right to De-energise was caused otherwise than by an act or omission of the User (or its employees, contractors or agents), the remedial works referred to in Clause 41.2.2 shall be undertaken at the cost of the Company (who shall reimburse the User where such works are undertaken by the User).

Emergency De-energisation

41.4 If, in the reasonable opinion of the Company, the condition or manner of operation of the Company's Distribution System or of the User's System poses an immediate threat of injury to any person or material damage to the Company's Distribution System or to the User's System, the Company shall have the right to:

41.4.1 without prior notice, De-energise the relevant Connection Point by undertaking De-Energisation Works on the Company's Distribution System; or

41.4.2 request the User to immediately De-energise the Connection Point, or that part of the User's System connected to the Connection Point that has given rise to the Company's request under Clause 41.4 (in which case the User shall promptly comply with such request); or

41.4.3 where the Company has the appropriate authorisations from the User in writing or under the relevant Bilateral Connection Agreement, without prior notice, De-energise that part of the User's System.

41.5 De-energisation Works undertaken under Clause 41.4 shall be undertaken in accordance with the relevant provisions of the Regulations.

41.6 Where the Company undertakes De-energisation Works pursuant to Clause 41.4.1 or 41.4.3, the Company shall give notice to the User, as soon as is reasonably practicable, of the fact that the Connection Point has been De-energised.

41.7 Where the User undertakes De-energisation Works pursuant to Clause 41.4.2, the User shall give notice to the Company, as soon as is reasonably practicable, of the fact that the Connection Point has been De-energised.

Post Emergency Re-energisation

41.8 Where a Connection Point has been De-energised pursuant to Clause 41.4:

41.8.1 in the case where the Company has De-energised the Connection Point by undertaking De-energisation Works on its Distribution System, the Company shall Re-energise the Connection Point as soon as is reasonably practicable after the circumstances leading to any De-energisation of the Connection Point under Clause 41.4 have ceased to exist and give notice to the User that such Re-energisation Works have been completed;

41.8.2 in the case where the User has De-energised the Connection Point by undertaking De-energisation Works on its System, the Company shall advise the User as soon as is reasonably practicable after the circumstances leading to any De-energisation of the Connection Point under Clause 41.4 have ceased to exist and the User shall then be entitled to undertake Re-energisation Works on its System to Re-energise the Connection Point and shall, where applicable, give notice, as soon as reasonably practicable, to the Company that such Re-energisation Works have been completed; or

41.8.3 in the case where the Company has De-energised the Connection Point by undertaking De-energisation Works on the User's System, the Company shall, as soon as is reasonably practicable after the circumstances leading to any De-energisation of the Connection Point under Clause 41.4 have ceased to exist:

A. advise the User; and

B. with the consent of the User, undertake Re-energisation Works on the User's System to Re-energise such Connection Point and advise the User when such Re-energisation Works have been completed; or

C. authorise the User to undertake such Re-energisation Works (in which case the User shall, as soon as reasonably practicable, notify the Company once such Re-Energisation Works have been completed).

Disputes on remedial works

41.9 Where the User disputes the nature of the remedial works specified, or the period for undertaking such remedial works specified, in any notice issued by the Company pursuant to Clause 41.2, then the Company and the User shall negotiate in good faith to resolve such dispute. If such dispute remains unresolved after 20 Working Days either the Company or the User shall be entitled to refer such dispute for arbitration in accordance with the provisions of Clause 58.

41.10 Where the Company requires remedial works to be undertaken prior to determination of the dispute, the User shall undertake any specified remedial works in accordance with the notice issued pursuant to Clause 41.2. Where arbitration determines that remedial works were not required, or that a lower cost remedial solution would have remedied the circumstance giving rise to the right to De-Energise, the Company shall reimburse the User for those costs that are in excess of the determined solution (together with any applicable VAT).

De-energisation and Re-energisation Works

41.11 If the Company resolves to De-energise a Connection Point pursuant to Clause 41.1:

41.11.1 the Company shall decide on the extent and nature of the De-energisation Works reasonably required to De-energise the relevant Connection Point;

41.11.2 the Company shall Re-energise the Connection Point as soon as is reasonably practicable after the circumstance giving rise to such De-energisation has ended; and

41.11.3 except where the Company resolves to De-energise a Connection Point pursuant to:

A. Clause 41.1.1 (where the emergency is caused by one or more of (i) the Company, (ii) the Company's Connectees, and (iii) persons other than the User acting in relation to the Company's Distribution System);

B. Clause 41.1.4; or

C. Clause 41.1.8.

the Company shall be entitled to undertake both the De-energisation Works and the subsequent Re-energisation Works at the cost of the User, and where required, the User shall pay to the Company the

relevant Transactional Charges associated with both the De-energisation Works and the subsequent Re-energisation Works.

41.12 Subject to Clauses 41.4.3(c) and 41.13.2, the User shall not be entitled to Re-energise a Connection Point which has previously been De-energised by the Company.

User's Right to Energise, De-energise or Re-energise a Connection Point

41.13 The User may Energise, De-energise or Re-energise a Connection Point by undertaking Energisation Works, De-energisation Works or Re-energisation Works:

41.13.1 (subject to Clause 41.12) on the User's System at the Connection Point; or

41.13.2 on the Company's Distribution System at the Connection Point where the User has agreed with the Company that the User may do so in that specific instance.

41.14 Subject to Clause 41.13, where the User undertakes Energisation Works, De-energisation Works or Re-energisation Works and such works involve works on the Company's Connection Equipment the User shall undertake such works in accordance with the provisions of this Agreement and the relevant Bilateral Connection Agreement.

Works Undertaken by the User

41.15 Energisation Works, De-energisation Works and Re-energisation Works on the Company's Connection Equipment carried out by or on behalf of the User pursuant to this Clause 41 shall be carried out at the User's cost by a suitably competent person who is either engaged by the User and authorised in writing to carry out such work or who:

41.15.1 is an Approved Contractor, in accordance with the procedure set out in Schedule 5;

41.15.2 is a Competent Person to whom a Permission has been issued, in accordance with the procedure set out in Schedule 5, to carry out the particular activities comprising the Energisation Works, De-energisation Works or Re-energisation Works in question; and

41.15.3 acts in accordance with the requirements set out in Schedule 5.

Works Undertaken by the Company

41.16 Where:

41.16.1 neither the User nor any of its contractors is an Approved Contractor; or

41.16.2 no employee of the User or any of its contractors (if Approved Contractors) holds a Permission; or

41.16.3 the User does not have the rights of access required to undertake such Energisation Works, De-energisation Works or Re-energisation Works; or,

41.16.4 where the Company and the User so agree,

the Company shall, subject to the provisions of this Agreement and the relevant Bilateral Connection Agreement, to the extent that it may lawfully do so, carry out Energisation Works, De-energisation Works and Re-energisation Works at the relevant Connection Point on behalf of the User. Such works will be at the

cost of the User and carried out within a reasonable time or, in circumstances of urgency, as soon as is reasonably practicable. The Company shall on request by the User inform the User of its reasonable requirements for the details by reference to which Connection Points to be Energised, De-energised or Re-energised are to be identified.

Good Industry Practice

41.17 The Company and the User shall both act in accordance with Good Industry Practice when carrying out, or procuring the carrying out of, any Energisation Works, De-energisation Works or Re-energisation Works.

Duty to Indemnify

41.18 Where the Company carries out works on behalf of the User pursuant to Clause 41.16:

41.18.1 the Company shall indemnify the User against all actions, proceedings, costs, demands, claims, expenses, liability, loss or damage arising from, or incurred by the User as a consequence of, physical damage to the property of the User, its officers, employees or agents, and in respect of the liability of the User to any other person for loss in respect of physical damage to the property of any person, in each case as a consequence of the Company (or its employees, contractors or agents) acting contrary to an accurate and appropriate instruction to Energise, De-energise or Re-energise a Connection Point; and

41.18.2 the User shall indemnify the Company against all actions, proceedings, costs, demands, claims, expenses, liability, loss or damage arising from, or incurred by the Company as a consequence of, physical damage to the property of the Company, its officers, employees or agents, and in respect of the liability of the Company to any other person for loss in respect of physical damage to the property of any person, in each case as a consequence of the Company (or its employees, contractors or agents) acting in reliance on any instructions given by the User to the Company which are materially inaccurate or misleading,

provided that (notwithstanding that an indemnity is given) neither the Company's nor the User's liability, pursuant to this Clause 41.18 and in respect of a particular incident or series of related incidents, shall exceed the figure referred to in Clause 53.1.

41.19 Where the User carries out works on the Company's Distribution System pursuant to Clause 41.13 or Clause 41.15:

41.19.1 the User shall indemnify the Company against all actions, proceedings, costs, demands, claims, expenses, liability, loss or damage arising from, or incurred by the Company as a consequence of, physical damage to the property of the Company, its officers, employees or agents, and in respect of the liability of the Company to any other person for loss in respect of physical damage to the property of any person, in each case as a consequence of the User (or its employees, contractors or agents) acting contrary to an accurate and appropriate instruction to Energise, De-energise or Re-energise a Connection Point; and

41.19.2 the Company shall indemnify the User against all actions, proceedings, costs, demands, claims, expenses, liability, loss or damage arising from, or incurred by the User as a consequence of, physical damage to the property of the User, its officers, employees or agents, and in respect of the liability of the User to any other person for loss in respect of physical damage to the property of any person, in each case as a consequence of the User (or its employees, contractors or

agents) acting in reliance on any instructions given by the Company to the User which are materially inaccurate or misleading,

provided that (notwithstanding that an indemnity is given) neither the User's nor the Company's liability, pursuant to this Clause 41.19 and in respect of a particular incident or series of related incidents, shall exceed the figure referred to in Clause 53.1.

Disconnection Procedure

41.20 In respect of a Connection Point, the User shall be entitled to send to the Company a notice requesting the Company to Disconnect a Connection Point. In respect of any notice sent to the Company pursuant to this Clause 41.20, the User shall specify the Connection Point, the location of the Connection Point and the date on which the Disconnection is required.

41.21 Unless agreed otherwise and in respect of the relevant Connection Point, following the receipt of a notice under Clause 41.20 the User shall remove its Connection Equipment from the Company's premises and the Company shall remove its Connection Equipment from the User's premises (in each case at the User's cost).

42. METERING EQUIPMENT AND DATA

42.1 The Company shall be entitled to obtain such data (from the metering equipment installed in accordance with this Clause 42, as the Company may reasonably require for:

42.1.1 (in the case of Systems Connections Points, and Connection Points connected at voltages for which the relevant Charging Methodology specifies that portfolio tariffs should not be used) the calculation of Use of System Charges;

42.1.2 the operation, design and planning of its Distribution System; and

42.1.3 validation that the electricity that is imported or exported across a Connection Point is no greater than the Maximum Import Capacity or the Maximum Export Capacity described in the relevant Bilateral Connection Agreement.

42.2 Where the Connection Point is a Systems Connection Point, the User shall (at its own cost) procure that:

42.2.1 metering equipment is installed, operated and maintained;

42.2.2 meter technical details are registered; and

42.2.3 meter aggregation rules are registered,

in each case in accordance with the provisions of the BSC.

42.3 Where the Connection Point is a Systems Connection Point, the User shall (at its own cost) procure that such data (from the metering equipment installed in accordance with Clause 42.2) as the Company may reasonably require pursuant to Clause 42.1 is provided in accordance with the timescale specified in the Company's Relevant Charging Statement or, where no timescale is specified, as soon as reasonably practical after the charging period.

42.4 Where metering equipment is required in accordance with Clause 42.2, the Company shall not be obliged to convey electricity across its Distribution System to or from the relevant Connection Point unless the necessary metering equipment is installed.

42.5 The Company shall (at its own cost) be entitled to install metering equipment in order to obtain data pursuant to Clause 42.1 whether or not the User has installed metering equipment.

42.6 Any metering equipment installed at the Connection Point pursuant to Clause 42.5, shall be installed, operated and maintained with an accuracy equivalent or better than that specified in Schedule 6.

Interconnection

42.7 Without prejudice to Clause 52, the User shall (unless expressly agreed in the relevant Bilateral Connection Agreement) use all reasonable endeavours to ensure that no Interconnection occurs. The User shall immediately notify the Company where it becomes aware of any Interconnection not expressly provided for in the relevant Bilateral Connection Agreement.

Nested Networks

42.8 The User shall immediately notify the Company where it becomes aware that the User's System (or any Electric Lines connected thereto) has been connected to:

42.8.1 a Distribution System of any person other than the Company; or

42.8.2 an Offshore Transmission System,

so that (subject to energisation) electricity may flow to or from the User's System.

Generation

42.9 The User shall (to the extent the User is aware of the same):

42.9.1 notify the Company of any changes in the number of Small Scale Generators connected in parallel with the User's System, such notification to be made within 20 Working Days of the User becoming aware of such change; and

42.9.2 in respect of generation to be connected in parallel with the User's System that does not fall under the definition of a Small Scale Generator:

A. notify the Company of such generation prior to connection of that generation (providing such information as the Company may reasonably request in order to allow compliance with a Relevant Instrument);

B. obtain the Company's consent to connection of that generation (such consent not to be unreasonably withheld); and

C. notify the Company if any such generation ceases to be so connected or if its generation characteristics change.

Rights of Access

42.10 The Company shall be entitled to collect data from, inspect, test and (if necessary) correct any metering equipment installed and maintained pursuant to Clause 42.5 (or, where the Connection Point is a Systems Connection Point, require the User to do so). The User shall use its reasonable endeavours to procure that the employees, agents, sub-contractors and invitees of the Company shall at all reasonable times have safe and unobstructed access to such metering equipment (whether installed under Clause 42.2 or 42.5). The Company shall procure that any individuals to whom access is given pursuant to this Clause 42.10 shall comply with all reasonable directions given by the User as to general safety and site security arrangements. Where either Party disputes the accuracy of the metering equipment referred to in this Clause 42, the provisions of Schedule 6 shall apply.

42.11 Where the Company installs metering equipment in accordance with Clause 42.5, the User shall: ensure that the employees, agents and invitees of the User will not interfere with such equipment or the immediate connections to such equipment without the prior written consent of the Company, except to the extent that emergency action has to be taken to protect the health and safety of persons or to prevent serious damage to property proximate to the metering equipment.

Data for Calculating Use of System Charges

42.12 The User shall (if it is an IDNO Party) provide to the Nominated Calculation Agent such data concerning each of the User's Systems as may reasonably be requested in order that the Nominated Calculation Agent can calculate the "HV split" and/or the "LV mains split" (as each such expression is defined in Schedule 29).

The User shall provide such data during October each year, and shall provide such data in such reasonable format as the Nominated Calculation Agent may request.

42.13 The Company shall (if it is a DNO Party):

42.13.1 procure that the Nominated Calculation Agent is appointed on terms that require the Nominated Calculation Agent to keep the information disclosed to it pursuant to Clause 41.12 and this Clause 42.13 confidential, and to not use such information for any purpose other than calculation of the "HV split" and/or the "LV mains split" (as each such expression is defined in Schedule 29); and

42.13.2 provide to the Nominated Calculation Agent such data concerning each of the Company's Systems as may reasonably be requested in order that the Nominated Calculation Agent can calculate the "HV split" and/or the "LV mains split" (as each such expression is defined in Schedule 29). The Company shall provide such data during October each year, and shall provide such data in such reasonable format as the Nominated Calculation Agent may request.

Unmetered Supplies Operator

42.14 This Clause 42.14 shall only apply where the Company is a DNO Party and the User is an EDNO. Where a Customer provides to the Company inventory data regarding unmetered equipment connected to the User's System within the Company's Distribution Services Area, then:

42.14.1 the User shall be deemed (for the purposes of this Agreement and the BSC, including the Unmetered Supplies Procedure) to have requested that the Company acts as the UMSO in respect of that inventory data (and the Company shall act as the UMSO in respect of such inventory data, and perform the functions of UMSO under the BSC in respect of such inventory data);

42.14.2 the Company and the User agree that such inventory data may be shared between each other and with other EDNOs (where such inventory data includes data relating to unmetered equipment connected to the Systems of such other EDNOs);

42.14.3 the User shall ensure that the Customerof such unmetered equipment shall oblige that Customer to:

A. submit inventory data to the Company as a combined inventory that includes all relevant individual items;

B. identify the User within that inventory as the DNO/IDNO Party for the System to which each relevant individual item is connected (to be identified by the use of the relevant Market Domain I.D. or Market Participant ID, which the User shall communicate to the Customer); and

C. permit the sharing of that data as described in Clause 42.14.2.

42.15 The User hereby indemnifies the Company against any and all losses or liabilities incurred by the Company as a result of its acts or omissions when acting as the UMSO on the User's behalf.

43. CHARGES

Charges

43.1 The User shall pay to the Company in respect of services provided under this Agreement (and under the agreements referred to in Clause 43.2) the charges set out in the Company's Relevant Charging Statement and, where appropriate, the provisions of the relevant Bilateral Connection Agreement. The Company may vary such charges at any time by giving the requisite period of written notice to the User, where the requisite period of notice is:

43.1.1 the period specified in the Company's Relevant Charging Statement;

43.1.2 where no such period is specified, 40 days; or

43.1.3 whether or not any such period is specified, the period agreed between the Company and the User.

Notwithstanding that the Company may vary such charges at any time, the Company shall use reasonable endeavours to: (1) vary such charges no more than two times per year: and (2) vary such charges with effect from April or October. Such charges and any variations are and will be calculated in accordance with the provisions of the Relevant Charging Statement.

43.2 The charges referred to in Clause 43.1 (the **Charges**) shall be:

43.2.1 the charges contained or referred to in the Company's Relevant Charging Statement for the time being in force pursuant to Condition 14 of its Distribution Licence (**Use of System Charges**); and

43.2.2 the charges for any other services provided by the Company to the User pursuant to:

A. a provision of this Section 2B; or

B. any other agreement between the Company and the User for the provision of such services which provides for payment pursuant to this Agreement.

Adjustment of Charges

43.3 On any occasion upon which the Charges payable by the User under Clause 43.1 have not been calculated strictly in accordance with the provisions of the Relevant Charging Statement, an appropriate adjustment shall be made by the Company and submitted to the User.

43.4 Where an adjustment in accordance with Clause 43.3:

43.4.1 discloses an overcharge, the Company shall repay to the User the amount by which the User has been overcharged together with interest thereon from the due date of the invoice containing the overcharge until the date of repayment. Such interest shall accrue from day to day at the base lending rate during such period of Barclays Bank plc, compounded annually; or

43.4.2 discloses an undercharge, the User shall pay to the Company the amount by which the User has been undercharged together with interest thereon from the due date of the invoice which should have included the amount of the undercharge until the date of payment. Such interest shall

accrue from day to day at the base lending rate during such period of Barclays Bank plc, compounded annually.

43.5 Where the User disputes the adjustment, the User and the Company shall attempt to resolve the dispute in good faith. Where the dispute remains unresolved after 20 Working Days, either the Company or the User may refer the dispute to arbitration in accordance with Clause 58 and the User or the Company (as applicable) shall pay the amount payable or repayable (if any) as so determined.

Invoicing of Charges

43.6 The Company shall invoice Use of System Charges (but excluding any Transactional Charges):

43.6.1 in respect of the period up to and including 31 March 2010, to the User by reference to:

A. data provided from metering equipment where it is fitted by the User in respect of a Connection Point pursuant to Clause 42 (as such Clause existed at that date);

B. where the Company and the User agree in respect of that period that metering equipment was not required to record Use of Distribution System at the Connection Point, data provided in accordance with the provisions of the agreement regarding the alternative basis of charging; or

C. data obtained from Operational Metering Equipment fitted by the Company in the circumstances provided by Clause 42.11 (as such Clause existed at that date); or

43.6.2 in respect of the period after 31 March 2010:

A. (in the case of Systems Connection Points) to the User by reference to data provided from the metering equipment fitted pursuant to Clause 42.2 (or, where the User has failed to fit such metering equipment or provide such data or where such metering equipment has failed, data obtained from metering equipment fitted pursuant to Clause 42.5);

B. (in the case of Connection Points connected at voltages for which the relevant Charging Methodology specifies that portfolio tariffs should not be used) to the User by reference to data obtained from the metering equipment fitted pursuant to Clause 42.5; or

C. (save in the case of Systems Connection Points and Connection Points connected at voltages for which the relevant Charging Methodology specifies that portfolio tariffs should not be used) to the EDNO (as defined in Schedule 19 Portfolio Billing)), by reference to the portfolio billing process set out in Schedule 19.

43.7 All charges payable by the User pursuant to this Clause 43, Clause 44 and Clause 45:

43.7.1 are exclusive of Value Added Tax and the Company may add to such amounts (and the User shall pay) Value Added Tax (if any) at the rate applicable thereto from time to time and Value Added Tax shall be payable at the same time and in the same manner as the amounts to which it relates; and

43.7.2 shall be without prejudice to any claims or rights which the User may have against the Company and except as expressly permitted by Schedule 4 shall be made without any set-off or deduction in respect of any claims or disputes or otherwise.

43.8 The Company may charge the User Use of System Charges calculated by reference to electricity discovered or reasonably and properly assessed to have been exported to, or imported from, the Company's Distribution System at a Connection Point but not recorded at the time of such export or import (for whatever reason). At any time when the Company charges the User Use of System Charges under this Clause 43.8, it shall explain to the User the calculation of those charges and the basis of that calculation.

Revision of Charges

43.9 Without prejudice to Clause 43.1, where the Company is intending to revise any of its Use of System Charges, it shall serve a copy of any notice it sends to the Authority pursuant to paragraph 20 of Condition 14 of its Distribution Licence on the User as soon as is reasonably practicable after such notice is sent to the Authority.

44. BILLING AND PAYMENT

44.1 This Clause 44 applies in respect of Use of System Charges that are not Transactional Charges.

Submission of Account

44.2 As soon as is reasonably practicable after the end of each charging period, the Company shall submit to the User an account specifying the Use of System Charges payable for the whole or any part of that charging period. Such account shall be based on data provided in accordance with Clause 43.6 (including so as to take into account any amended data provided in accordance with Clause 43.6).

44.3 Where the data referred to in Clause 43.6 is not available, the Company may use estimated data prepared by the Company to determine an account. Where an account is based on estimated data, the account shall be subject to any adjustment which may be necessary following receipt of actual data.

44.3.A Where the data provided in accordance with Clause 43.6 is amended or was previously estimated and subsequently becomes available, the Company shall ensure that an account containing the relevant adjustment is submitted to the User within 60 days following receipt of the amended or actual data.

Obligation to Pay

44.4 Within 14 days of the date of an account submitted in accordance with Clause 44.2 or Clause 44.3, the User shall pay to the Company all sums due in respect of such account in pounds sterling by electronic transfer of cleared funds to such bank account (located in the United Kingdom) as is specified in the account, quoting the account number against which payment is made and/or such other details as the Company may reasonably require.

Disputes

44.5 Where any sum included in an account submitted in accordance with Clause 44.2 or Clause 44.3 is disputed by the User, the provisions of Schedule 4 shall apply.

45. TRANSACTIONAL CHARGES

45.1 This Clause 45 applies in respect of those services falling within the scope of Clause 43.1 for which the charges to be levied are not billed in accordance with Clause 44 and, instead, are calculated by reference to the number or frequency of specific transactions (Transactional Charges).

Submission of Account

45.2 Within 30 days after the end of each calendar month, the Company shall submit to the User an account specifying:

45.2.1 the payment due from the User in respect of services performed during that month for which Transactional Charges are payable, and

45.2.2 any Value Added Tax payable thereon.

Obligation to Pay

45.3 Within 30 days of the date of an account submitted in accordance with Clause 45.2, the User shall pay to the Company all sums due in respect of such account in pounds sterling by electronic transfer of cleared funds to such bank account (located in the United Kingdom) as is specified in the account, quoting the account number against which payment is made, or by other methods as the Company and the User may agree.

Disputes

45.4 Where any sum included in an account submitted in accordance with Clause 45.2 is disputed by the User, the provisions of Schedule 4 shall apply.

46. PAYMENT DEFAULT

46.1 Subject to Clause 44.5 and Clause 45.4, failure by the User to pay any sum due as cleared funds by the due date for payment in accordance with Clause 44.4, or Clause 45.3 shall be a **Payment Default.**

46.2 Where the User so defaults, the Company shall send a notice (a **Late Payment Notice**) to the User:

46.2.1 setting out the amount owed by the User to the Company, and identifying the specific account to which the Payment Default relates;

46.2.2 stating to whom payment should be made;

46.2.3 specifying the method of payment; and

46.2.4 where the Company intends to exercise its rights under Clause 46.3 and/or Clause 46.4, advising the User of its intention.

Interest

46.3 The Company shall be entitled, without prejudice to any other right or remedy, to receive interest on any payment not duly made pursuant to the terms of Clause 44.4, or Clause 45.3 calculated from day to day at a rate per annum equal to the Default Interest Rate from the day after the date on which payment was due up to and including the date of payment, together with an administration charge as notified by the Company to the User from time to time.

Material Breach

46.4 Failure to remedy a Payment Default within four Working Days of receipt of a Late Payment Notice shall be a material breach of this Agreement for the purposes of Clause 54.1.1 and the Company shall be entitled to suspend the right to make any further Connections to the Company's Distribution System. Where the Company takes such action it shall send a notice to the User.

46A. EDNO UMS CHARGES

46A.1 This Clause 46A applies where the Company acts (or acted) as the User's UMSO pursuant to Clause 42.14.

46A.2 The User shall, in respect of each period and each inventory for which the Company acted as the User's UMSO, be entitled to invoice the Company for the difference between the following (such difference being the **"EDNO UMS Charges"**):

46A.2.1 the Use of System Charges for that period and the Metering Points on the User's System covered by that inventory, calculated on the basis of the Company's relevant all-the-way tariff(s) (as determined in accordance with the CDCM); and

46A.2.2 the Use of System Charges for that period and the Metering Points on the User's System covered by that inventory, calculated on the basis of the Company's relevant equivalent LDNO tariff(s) (as determined in accordance with the CDCM).

Submission of Account and Obligation to Pay

46A.3 As soon as is reasonably practicable after the end of each charging period, the User may submit to the Company an account specifying the EDNO UMS Charges payable in accordance with this Clause 46A for the whole or any part of that charging period. EDNO UMS Charges that are not invoiced within 14 months of the end of the relevant charging period shall not be invoiced and shall not be payable.

Obligation to Pay

46A.4 Subject to Clauses 46A.5 and 46A.6, within 30 days of the date of an account submitted in accordance with Clause 46A.2, the Company shall pay to the User all sums due in respect of such account in pounds sterling by electronic transfer of cleared funds to such bank account (located in the United Kingdom) as is specified in the account, quoting the account number against which payment is made (or by other methods as the Company and the User may agree).

Disputes with Supplier Parties

46A.5 The Company and the User acknowledge that the calculation under Clause 46A.2 is based on the fact that the Company will invoice the amount referred to in Clause 46A.2.2 to the relevant Supplier Party under Section 2A. To the extent that the relevant Supplier Party is late in paying (or fails to pay) the corresponding amount under Section 2A, then the User shall have no entitlement to receive (and the Company shall have no liability to pay) the EDNO UMS Charges (unless and until the Company is paid the corresponding amount under Section 2A).

46A.6 In the event of a late payment by the relevant Supplier Party under Section 2A (as referred to in Clause 46A.5), the Company shall pay the EDNO UMS Charges within 30 days after it receives the corresponding payment from the Supplier Party.

47. SECURITY COVER

47.1 The User shall provide Cover to the Company in accordance with the provisions of Schedule 1.

48. COMPLIANCE WITH CODES

General Compliance with Codes

48.1 The Company and the User each undertake to comply with the Company's Distribution Code, the User's Distribution Code, the CUSC, the Grid Code and the Electricity Supply Emergency Code (in each case) as appropriate and as applicable to them in respect of each Connection Point. Where the User is the OTSO Party, the User undertakes to comply with the STC as applicable to it in respect of each Connection Point.

48.2 Each of the Company and the User shall cooperate with the other to facilitate compliance by them both with their obligations under Clause 48.1.

CUSC and Grid Code

48.3 Each of the Company and the User ("**Operator A**") undertakes not to do anything (or allow anything to occur) in relation to its System that causes, or is likely to cause, the other ("**Operator B**") to breach the CUSC or the Grid Code.

48.4 Where Operator B could not, in compliance with the Grid Code and the CUSC, do something (or allow something to occur) in relation to its System if its System was a Distribution System directly connected to the National Electricity Transmission System at the Connection Point (rather than to Operator A's System) without undertaking an Action or obtaining a ISOP Action, then Operator B shall not do that thing (or allow that thing to occur) without undertaking or obtaining the Equivalent Action.

Conflict

48.5 In the event of any conflict between this Section 2B or the relevant Bilateral Connection Agreement (on the one hand) and a code specified in Clause 48.1 (on the other), then the provisions of the relevant code shall prevail.

Definitions

48.6 In this Clause:

Action	means any request, submission, notification or other action by (or to be procured by) a person other than the Independent System Operator and Planner under or pursuant to the CUSC or the Grid Code.
Electricity Supply Emergency Code	means the code of that name designated as such by the Secretary of State from time to time.
Equivalent Action	means: (a) in respect of an Action, the equivalent request, submission, notification or other action by (or to be procured by) Operator B; and (b) in respect of a ISOP Action, the equivalent confirmation, consent, approval or other action of Operator A (or a confirmation by Operator A that the Independent System Operator and Planner has undertaken that ISOP Action).
National Electricity Transmission System	has the meaning given to that expression in the CUSC.
ISOP Action	means any confirmation, consent, approval or other action of the Independent System Operator and Planner (including entry by the Independent System Operator and Planner into a contract).
Operator A	has the meaning given to that expression in Clause 48.3.
Operator B	has the meaning given to that expression in Clause 48.3.

49. GUARANTEED PERFORMANCE STANDARDS

49.1 Where the Company or the User (the "**Proximate Operator**") is liable to make a payment, pursuant to any provision of regulations 5, 6, 7, 8, 10 or 12 of the ESPR, to a Customer, and that liability arises wholly or partly from a failure, act or omission on the part of the other of them (the "**Remote Operator**"), the Remote Operator shall make (as appropriate) all or part of an equivalent compensation payment directly to the Proximate Operator for the benefit of the Customer.

49.2 For the purpose of this Clause "**equivalent compensation payment**" means:

49.2.1 the prescribed sum (as such term is defined in the ESPR); plus

49.2.2 the Proximate Operator's reasonable costs incurred in facilitating such payment.

49.3 Where the Proximate Operator is of the opinion that the Remote Operator is liable for making an equivalent compensation payment to the Proximate Operator under Clause 49.1, the Proximate Operator shall prepare a report specifying the equivalent compensation payments required and submit such report to the Remote Operator. Such report shall be of sufficient detail to enable the Remote Operator to reasonably validate such claim for the equivalent compensation payment.

49.4 On receipt of a report provided by the Proximate Operator under Clause 49.3, the Remote Operator shall advise the Proximate Operator whether the Remote Operator considers itself wholly or partly liable for the failure. The Proximate Operator and the Remote Operator shall endeavour to agree the extent of responsibility of each part (where relevant) in relation to the failure to meet the prescribed level of performance pursuant to the ESPR, and the proportion of compensation payable by the Remote Operator in each case.

49.5 For the purpose of this Clause 49 an act or omission by the Remote Operator shall include, but shall not be restricted to:

49.5.1 such act or omission by the Remote Operator in respect of its System that compromises the ability of the Proximate Operator to meet performance standards defined in the ESPR in respect of Customers connected to the Proximate Operator's System; or

49.5.2 failure of the Remote Operator to provide timely information to the Proximate Operator in respect of the operation of the Remote Operator's System to enable the Proximate Operator to prevent failure of the standards prescribed in the ESPR.

49.6 If a Customer connected to the Proximate Operator's System contacts the Remote Operator in relation to a matter which might form the basis of a claim under the ESPR, then the Remote Operator shall diligently record the details of the Customer's complaint and shall pass on the details of the Customer's complaint to the Proximate Operator as soon as reasonably practicable together with details of the Customer's name and address. If any compensation payment becomes payable by the Proximate Operator as a consequence of the Remote Operator's failure to pass on details of the Customer's complaint, the Remote Operator shall be liable to the Proximate Operator for such payment.

49.7 When the Proximate Operator has received a payment from the Remote Operator pursuant to Clause 49.1, then the Proximate Operator shall pass such payment to the Customer or to the Customer's supplier for the benefit of the Customer as soon as reasonably practicable and if, due to the Proximate Operator's delay, an

additional payment becomes due pursuant to ESPR regulation 19 then this additional payment shall be the liability of the Proximate Operator.

49.8 Neither the Remote Operator nor the Proximate Operator shall lead a Customer to believe that the Customer has a valid claim for a guaranteed standard payment by reason of the action or default of the other. Where, however, a Customer does have a valid claim, a breach of the provisions of this Clause 49.8 shall not excuse the person against whom the claim lies from making the relevant payment.

49.9 In the event of a dispute between the Remote Operator and the Proximate Operator as to which of them is liable to pay compensation, or as to the extent of responsibility in relation to any failure to meet a prescribed level of performance pursuant to any provision of the ESPR, in each case in respect of a Customer connected to the Proximate Operator's System, then in the first instance the Proximate Operator shall make the compensation payment for the benefit of the Customer and then the dispute shall be deemed to be a dispute which may be referred to the Authority by either the Company or the User in accordance with Section 39B of the Act and ESPR regulation 18 and the provisions as to practice and procedure contained in ESPR schedule 3 shall be deemed to apply to any such dispute. If the Authority determines that the Remote Operator is liable to pay the Proximate Operator the compensation payments (or a proportion of the compensation payments) then the Remote Operator shall pay to the Proximate Operator the equivalent compensation payments as soon as is reasonably practicable.

49.10 If a Customer connected to the Proximate Operator's System refers to the Authority, under Section 39B of the Act, a dispute between the Customer and the Remote Operator as to whether the Customer is entitled to compensation under the ESPR (rather than as to which of the Proximate Operator and the Remote Operator is liable, which shall be subject to Clause 49.9), the Proximate Operator shall (unless otherwise agreed with the Remote Operator) have conduct and management of such dispute (in which case, provided the Proximate Operator agrees to reimburse the Remote Operator's costs, the Remote Operator shall use its best endeavours to comply with the Proximate Operator's directions in relation to such dispute).

49.11 The Company and the User shall each cooperate with the other, and exchange information with the other, regarding System Outages on its System that may give rise to claims under this Clause 49.

50. CONFIDENTIALITY RESTRICTIONS ON THE COMPANY

Confidential Information

50.1 In this Clause 50, **Confidential Information** means any information which the Company or any Affiliate or Related Undertaking of the Company:

50.1.1 receives from the User under this Agreement; or

50.1.2 holds in respect of a Connectee and is information which it has acquired in its capacity as the operator of the Distribution Business of the Company; or

50.1.3 receives from any Connectee, which, if received from the User, would fall within Clause 50.1.1; or

50.1.4 receives from the User in error, but which would usually be considered to be confidential,

and the provisions of this Clause 50 shall apply to such Confidential Information, save where the User notifies or otherwise gives prior written agreement to the Company that such Confidential Information need not be treated as confidential.

Restrictions on Use and Disclosure

50.2 Where the Company or any Affiliate or Related Undertaking of the Company receives or acquires Confidential Information, the Company shall (and shall procure that such Affiliate or Related Undertaking shall):

50.2.1 not use the Confidential Information for any purpose other than as required or expressly permitted under this Agreement, the relevant Bilateral Connection Agreement or any other agreement entered into between the Company and the User for the provision of services by the Distribution Business of the Company;

50.2.2 without prejudice to Clause 50.2.1, not use the Confidential Information in a manner which may obtain for the Company or any Affiliate or Related Undertaking of the Company (as the case may be) any commercial advantage in the operation of an Affiliate;

50.2.3 not authorise access to nor disclose any Confidential Information other than:

A. to such of the employees of the Company or any Affiliate or Related Undertaking of the Company as require to be informed thereof for the effective performance of the Company's obligations under this Section 2B, the relevant Bilateral Connection Agreement and any other agreement entered into between the Company and the User for the provision of services by the Distribution Business of the Company or for the effective operation of such Distribution Business;

B. to such agents, consultants, professional or other advisors, and contractors as require to be informed thereof or to provide advice which is in connection with the operation of the Distribution Business of the Company;

C. to the Authority;

D. information which the Company or any Affiliate or Related Undertaking of the Company (as the case may be) is required or permitted to make disclosure of:

i. in compliance with the duties of the Company or any Affiliate or Related Undertaking of the Company (as the case may be) under the Act or any other requirement of a Competent Authority;

ii. in compliance with the provisions of any Relevant Instruments;

iii. in compliance with any other requirement of law;

iv. in response to a requirement of any Stock Exchange or the Panel on Takeovers and Mergers or any other regulatory authority (whether or not similar to those bodies); or

pursuant to the arbitration rules of the Electricity Arbitration Association or pursuant to any judicial or other arbitral process or tribunal of competent jurisdiction; and

50.2.4 take all reasonable steps to ensure that any such person as is referred to in sub-clauses 50.2.3 (A) and (B) to whom the Company or any Affiliate or Related Undertaking of the Company (as the case may be) discloses Confidential Information does not use that Confidential Information for any purpose other than that for which it was provided and does not disclose that Confidential Information otherwise than in accordance with the provisions of this Clause 50.

Other Matters

50.3 Not Used.

50.4 The User agrees that where the Company uses or discloses Confidential Information in accordance with this Clause 50, such Confidential Information need not be treated as confidential for the purposes of Condition 42 of the Company's Distribution Licence to the extent of such use or disclosure.

50.5 The Company undertakes that, in any case where information to be disclosed by it under this Agreement may lawfully be disclosed only with the prior consent of the person to whom the information relates, it will use its reasonable endeavours to obtain such prior consent so as to enable it, or the User as the case may be, promptly to perform its obligations under this Section 2B and the relevant Bilateral Connection Agreement, provided that where the consent of the User's Connectee is required to be obtained for the purposes of this Section 2B and the relevant Bilateral Connection Agreement, the User (and not the Company) shall have the obligation to obtain such consent under Clause 51.6.

51. CONFIDENTIALITY RESTRICTIONS ON THE USER

Confidential Information

51.1 In this Clause 51, **Confidential Information** means:

51.1.1 any information (whether in writing, in disc or electronic form, or otherwise) which has been properly disclosed by the Company under this Agreement but which would usually be considered to be confidential; and

51.1.2 any information which is marked as confidential or which is provided together with a covering letter indicating its confidential nature,

and, to the extent that any Affiliate or Related Undertaking of the User is in possession of Confidential Information, the User shall procure that such Affiliate or Related Undertaking observes the restrictions in Clauses 51.2 to 51.4 (inclusive) as if in each such Clause there was substituted for the User the name of the Affiliate or Related Undertaking.

Restrictions on Use and Disclosure

51.2 The User hereby undertakes to the Company that it will preserve the confidentiality of, and not directly or indirectly reveal, report, publish, disclose or transfer or use for its own purposes, Confidential Information except:

51.2.1 in the circumstances set out in Clause 51.3;

51.2.2 to the extent otherwise required or expressly permitted by this Agreement, the relevant Bilateral Connection Agreement, or any other agreement entered into between the Company and the User for the provision of services by the Distribution Business of the Company; or

51.2.3 with the prior consent in writing of the Company.

51.3 The circumstances set out in this Clause 51.3 are:

51.3.1 where the Confidential Information, before it is furnished to the User, is in the public domain;

51.3.2 where the Confidential Information:

A. is acquired by the User in circumstances in which this Clause 51 does not apply;

B. is acquired by the User in circumstances in which this Clause 51 does apply and thereafter ceases to be subject to the restrictions imposed by this Clause 51; or

C. (after it is furnished to the User) enters the public domain,

otherwise (in any such case) than as a result of (i) a breach by the User of its obligations in this Clause 51; or (ii) a breach by the person who disclosed that Confidential Information of that person's confidentiality obligation, and the User is aware of such breach;

51.3.3 if the User is required or permitted to make disclosure of the Confidential Information to any person:

A. in compliance with the duties of the User under the Act or any other requirement of a Competent Authority;

B. in compliance with the provisions of any Relevant Instrument;

C. in compliance with any other law or regulation;

D. in response to a requirement of any Stock Exchange or the Panel on Takeovers and Mergers or any other regulatory authority (whether or not similar to those bodies); or

E. pursuant to the rules of the Electricity Arbitration Association or pursuant to any judicial or arbitral process or tribunal of competent jurisdiction;

51.3.4 the disclosure of Confidential Information to any Affiliate or Related Undertaking of the User, to the employees, directors, agents, consultants and professional advisers of the User or any Affiliate or Related Undertaking of the User, in each case on the basis set out in Clause 51.4; or

51.3.5 the disclosure of Confidential Information to the extent that the Confidential Information is required to be disclosed by the User for the purposes of providing billing information to suppliers and Connectees.

51.4 The User shall take all reasonable steps to ensure that any such person as is referred to in Clause 51.3.4 to whom the User discloses confidential information does not use that confidential information for any purpose other than that for which it is provided and does not disclose that confidential information otherwise than in accordance with this Clause 51.

Other Matters

51.5 Not Used.

51.6 The User undertakes that, in any case where information to be disclosed under this Agreement may lawfully be disclosed only with the prior consent of the person to whom the information relates, it will use its reasonable endeavours to obtain such prior consent so as to enable it or (as the case may be) the Company promptly to perform its obligations under this Section 2B.

52. MODIFICATIONS

52.1 Unless agreed otherwise by the Company and the User in the relevant Bilateral Connection Agreement, no Modification may be made by or on behalf of the Company or the User otherwise than in accordance with the provisions of this Clause 52.

Modifications Proposed by Users

52.2 If the User wishes to make a Modification it shall complete and submit to the Company in advance of the Modification a Modification Application in the form shown in the relevant Bilateral Connection Agreement and comply with the terms thereof.

52.3 As soon as reasonably practicable (but not later than the date required by the Company's Distribution Licence) after receipt by the Company of the Modification Application, (save where the Authority consents to a longer period) the Company shall make a Modification Offer to the User. The Modification Offer shall include the form of any variations the Company requires to the relevant Bilateral Connection Agreement and its schedules. During such period the Company and the User shall discuss in good faith the implications of the proposed Modification(s).

52.4 The Modification Offer will be open for acceptance in accordance with its terms for up to 3 calendar months from the date upon which the Modification Offer is sent to the User (unless either the Company or the User makes an application to the Authority under Condition 7 of the Company's Distribution Licence, in which case the Modification Offer shall remain open for acceptance until the date 14 days after any determination by the Authority pursuant to such application). If the Modification Offer is accepted by the User, the Modification shall proceed according to the terms of this Agreement, and the relevant Bilateral Connection Agreement shall be varied to reflect the terms of the Modification.

Modifications proposed by the Company

52.5 If the Company wishes to make a Modification to the Company's Distribution System, whether at or remote from the Connection Point, the Company shall complete and submit to the User a notification of the Modification and shall advise the User of any works which the Company reasonably believes that the User may have to carry out as a result.

52.6 The User may, as soon as practicable after any notice by the Company under Clause 52.5, consult with it over the proposed Modification. The User may, (save where the Authority consents to a longer period) within the period stated therein (which shall be sufficient to enable the User reasonably to assess the implications of the proposed Modification), make an application to the Authority under Condition 7 of the Company's Distribution Licence.

52.7 As soon as practicable after the receipt of notification of the Modification pursuant to Clause 52.5 or, if an application to the Authority has been made by the User, the determination by the Authority, and in any event within 2 calendar months thereof, the User shall submit to the Company a Modification Application and shall comply with the terms thereof.

52.8 Subject to the payment of its reasonable charges, if any, as provided in this Clause 52.8 the Company will provide advice and assistance reasonably requested by the User to enable the User to assess the implications, including the feasibility, of making a Modification to the User's System. If the Modification under consideration by the User is or may be required as a result of a Modification required by the Company, then the Company shall provide such reasonable advice and assistance free of charge. If the proposed Modification is or may be proposed by the User, the Company may charge the User such amount as is

reasonable in all the circumstances for such advice and assistance. The provision of such advice and assistance shall be subject to the terms of the relevant Bilateral Connection Agreement.

52.9 Where a Modification by the Company alters the technical characteristics of the Connection Point (as set out in the relevant Bilateral Connection Agreement), but not otherwise, the Company shall compensate the User for the reasonable cost and expense of any modification required to be made by the User as a result of such Modification; provided that the Company shall not be obliged to compensate the User where such Modification is required as a consequence of any Relevant Instrument, legislative requirement or Directive. Any dispute as to whether the Company is obliged to compensate the User or as to the amount of any such compensation may be referred to arbitration in accordance with the provisions of Clause 58.

SECTION 2.C - DISTRIBUTOR TO GAS SUPPLIER RELATIONSHIPS

SCOPE OF SECTION 2C

This Section 2C and the Schedules referred to in it set out the terms and conditions pursuant to which a DNO/IDNO Party shall allow a Gas Supplier Party to undertake Permitted Third Party Metering Works, and thereafter to maintain any Smart Metering Comms Hub Devices installed pursuant to those works.

52A. INTERPRETATION OF SECTION 2C

Party Obligations

52A.1 In this Section 2C, in the Schedules when applied pursuant to this Section 2C, and in the terms defined in Clause 1 when used in this Section 2C or those Schedules, a reference to a Company is a reference to each Party that is either a DNO Party or an IDNO Party separately and individually and, where an obligation is imposed on, or a right granted to, a Company, that obligation is imposed on, and that right is granted to, each such Party separately and independently.

52A.2 In this Section 2C, in the Schedules when applied pursuant to this Section 2C, and in the terms defined in Clause 1 when used in this Section 2C or those Schedules, a reference to a Gas Supplier is:

52A.2.1 a reference to each Party that is a Gas Supplier Party separately and individually and, where an obligation is imposed on, or a right is granted to, a Gas Supplier, that obligation is imposed on, and that right is granted to, each such Party separately and independently; and

52A.2.2 when made in relation to a Company and any period of time, a reference to each Gas Supplier Party (separately, individually and to the relevant extent) who is (or was), during that period, the Responsible Gas Supplier for a Premises connected to that Company's Distribution System.

52A.3 This Section 2C, and the Schedules when applied pursuant to it, shall:

52A.3.1 only create rights and obligations between DNO/IDNO Parties (on the one hand) and Gas Supplier Parties (on the other), and shall not create rights or obligations between DNO/IDNO Parties and other DNO/IDNO Parties or between Gas Supplier Parties and other Gas Supplier Parties;

52A.3.2 not apply to the OTSO Party, to the Crowded Meter Room Coordinator, to SIP Parties or to Supplier/CVA Registrants;

52A.3.3 only create obligations between a Company and a Gas Supplier to the extent that, and in relation to those periods for which, that Gas Supplier is (or was) a Responsible Gas Supplier for a Premises connected to that Company's Distribution System; and

52A.3.4 not impose any obligations between a Company and a Gas Supplier in relation to periods for which that Gas Supplier is (or was) not a Responsible Gas Supplier for a Premises connected to that Company's Distribution System.

52A.4 In this Section 2C, in the Schedules when applied pursuant to this Section 2C, and in the terms defined in Clause 1 when used in this Section 2C or those Schedules, unless the context otherwise requires, references to:

52A.4.1 an Exit Point or Entry Point are, when made in relation to a Company, references to an Exit Point or Entry Point on that Company's Distribution System;

52A.4.2 a Premises are, when made in relation to a Gas Supplier and any period of time, references to a Premises for which the Gas Supplier is (or was) the Responsible Gas Supplier during that period of time;

52A.4.3 a Connectee, Connected Installation, Connection Agreement, Metering Point, Premises, Relevant Alt HAN Equipment or Smart Metering Comms Hub Device, are (when made in relation to a Company) references to a Connectee, Connected Installation, Connection Agreement, Metering Point, Premises, Relevant Alt HAN Equipment or Smart Metering Comms Hub Device relating to an Exit Point on such Company's Distribution System; or

52A.4.4 a Connectee, Connected Installation, Connection Agreement, Exit Point, Metering Point, Relevant Alt HAN Equipment or Smart Metering Comms Hub Device, are (when made in relation to a Gas Supplier and any period of time) references to a Connectee, Connected Installation, Connection Agreement, Exit Point, Metering Point, Relevant Alt HAN Equipment or Smart Metering Comms Hub Device relating to a Premises for which the Gas Supplier was the Responsible Gas Supplier during that period of time.

Application Limited to Whole Current Metering

52A.5 This Section 2C shall only apply to Exit Points or Entry Points for which the import or export of electricity is metered directly by putting the full electrical current through the meter (known as 'whole current metering').

52B. DE-ENERGISATION AND RE-ENERGISATION WORKS

Requirements for those undertaking Works

52B.1 Any and all permitted Third Party Metering Works, De-energisation works and Re-energisation works carried out by or on behalf of the Gas Supplier pursuant to this Clause 52B shall only be carried out by a person working on behalf of a Gas Meter Asset Manager engaged by the Gas Supplier.

Good Industry Practice

52B.2 The Company and the Gas Supplier shall each act in accordance with Good Industry Practice when carrying out, or procuring the carrying out of, any and all works pursuant to this Clause 52B.

Works Undertaken by the Gas Supplier

52B.3 If the Gas Supplier wishes at any time to undertake Permitted Third Party Metering Works in respect of a Third Party Metering Point, then the Gas Supplier may (to the extent reasonably required in order to do so, and with no prior notice to the Company) De-energise the Exit Point and/or Entry Point to which the Third Party Metering Point relates in order to do so; provided that the Gas Supplier Re-energises that Exit Point and/or Entry Point as soon as reasonably practicable thereafter.

52B.4 If the Gas Supplier resolves to De-energise and/or Re-energise an Exit Point and/or Entry Point pursuant to Clause 52B.3, then the Gas Supplier shall:

52B.4.1 (subject to Clauses 52B.2 and 52C) decide on the extent and nature of the De-energisation Works and Re-energisation Works, and shall undertake such De-energisation Works and Re-energisation Works at its own cost; and

52B.4.2 comply with the Relevant Instruments and the Distribution Code in relation to the De-energisation Works and Re-energisation Works.

Company's Right to De-energise

52B.5 Notwithstanding the right of the Gas Supplier under this Clause 52B to install a Smart Metering Comms Hub Device and/or Relevant Alt HAN Equipment (and to keep either or both of them installed), the Company may, at any time with no prior notice to the Gas Supplier, De-energise any Exit Point and/or Entry Point if:

52B.5.1 the Company is entitled to do so pursuant to the Connection Agreement relating to such Exit Point and/or Entry Point; or

52B.5.2 the Company is entitled to do so pursuant to the Relevant Instruments or Section 2A;

52B.5.3 the Company is instructed, pursuant to the terms of the Connection and Use of System Code or the Balancing and Settlement Code, to do so;

52B.5.4 the Company reasonably considers it necessary to do so for safety or system security reasons;

52B.5.5 the Company reasonably considers it necessary to do so to avoid interference with the regularity or efficiency of its Distribution System (including where the Smart Metering Comms Hub Device and/or Relevant Alt HAN Equipment is interfering with the Company's Distribution System);

52B.5.6 an accident or emergency occurs or threatens to occur which requires the Company to do so to avoid the risk of personal injury to any person or physical damage to the property of the Company, its officers, employees or agents, or the property of any other person;

52B.5.7 the rights of the Gas Supplier are suspended in accordance with Clause 54.2; or

52B.5.8 subject to the terms of a replacement agreement, this Agreement is terminated, or the Gas Supplier ceases to be a Party in accordance with the provisions of Clause 54.

52B.6 If the Company resolves to De-energise an Exit Point and/or Entry Point pursuant to Clause 52B.5, then:

52B.6.1 (subject to Clauses 52B.2 and 52C) the Company shall decide on the extent and nature of the De-energisation Works required to De-energise the Exit Point and/or Entry Point;

52B.6.2 the Company shall Re-energise the Exit Point and/or Entry Point as soon as is reasonably practicable after the circumstance giving rise to such De-energisation has ended (and shall determine the extent and nature of the Re-energisation Works required to Re-energise the Exit Point and/or Entry Point); and

52B.6.3 there shall be no charge to the Gas Supplier in respect of such De-energisation Works and/or Re-energisation Works, except where the Company resolves to De-energise an Exit Point and/or Entry Point because of the Gas Supplier's Permitted Third Party Metering Works, the Smart Metering Comms Hub Device, the Relevant Alt HAN Equipment and/or a breach by the Gas Supplier of this Agreement (in which case the Gas Supplier shall pay the Company's reasonable costs incurred in relation to the De-energisation Works and the subsequent Re-energisation Works).

Other Matters

52B.7 For the avoidance of doubt, the Gas Supplier shall only be entitled to Re-energise an Exit Point and/or Entry Point that has been De-energised by (or on behalf of) the Gas Supplier pursuant to this Agreement.

52B.8 In undertaking De-energisation Works and Re-energisation Works as permitted by this Clause 52B, the Company may reposition the Smart Metering Comms Hub Device (or any part of it) on the meter board (but may not otherwise alter the position of the Smart Metering Comms Hub Device).

52B.9 Subject to any contrary agreement between the Gas Supplier and the Electricity Supplier, where the Gas Supplier has no further need for the Smart Metering Comms Hub Device and/or Relevant Alt HAN Equipment (and there is no reasonable prospect of the Gas Supplier, or any future Gas Supplier, needing to use that Smart Metering Comms Hub Device and/or Relevant Alt HAN Equipment in the future), then the Gas Supplier shall remove that Smart Metering Comms Hub Device and/or Relevant Alt HAN Equipment (or, to the extent consistent with Good Industry Practice, render either or both of them inoperable in accordance with Good Industry Practice). Where a Smart Metering Comms Hub Device and/or Relevant Alt HAN Equipment has been rendered inoperable pursuant to this Clause 52B.9, then the Company shall at any time thereafter be entitled to remove and dispose of that Smart Metering Comms Hub Device and/or Alt HAN Equipment.

Non-Interference

52B.10 The Company shall ensure that the Gas Supplier (and its Gas Meter Asset Manager when acting in its capacity as such) is entitled to interfere with the Distribution System to the extent it is necessary to do so in exercising the Gas Supplier's rights or complying with its obligations under this Clause 52B or Clause 52C. The Gas Supplier shall not (and shall ensure that its Gas Meter Asset Manager when acting in its capacity as such shall not) otherwise interfere with the Distribution System (subject to any contrary agreement between the Gas Supplier and the Company).

52B.11 The Gas Supplier shall ensure that the Company is entitled to interfere with the Smart Metering Comms Hub and/or Relevant Alt HAN Equipment to the extent it is necessary to do so in exercising the Company's rights or complying with its obligations under this Clause 52B or Clause 52C. The Company shall not otherwise interfere with the Smart Metering Comms Hub and/or Relevant Alt HAN Equipment (subject to any contrary agreement between the Gas Supplier and the Company).

52B.12 The Gas Supplier shall indemnify the Company against all actions, proceedings, costs, demands, claims, expenses, liability, loss or damage arising directly from physical damage to the property of any person caused by the Gas Supplier's Gas Meter Asset Manager in exercising the Gas Supplier's rights under this Clause 52B (but excluding liability for any loss of profit, loss of revenue, loss of use, loss of contract or loss of goodwill, and subject to a cap of £1 million per incident or series of related incidents).

52B.13 For the purposes of Clause 53.4, the Company and the Gas Supplier agree that matters relating to Smart Metering Comms Hub Devices and/or Relevant Alt HAN Equipment that are not the subject of express rights and obligations under this Section 2C (including the standard to which such devices and/or equipment are to be maintained) are outside of the subject matter of this Agreement (and neither the Company nor the Gas Supplier waive their rights or remedies under Clause 53.4 in respect of the same).

52C. METER OPERATION CODE OF PRACTICE

52C.1 The Gas Supplier shall procure that the Gas Meter Asset Manager which carries out Permitted Third Party Metering Works, De-energisation Works and/or Re-energisation Works pursuant to Clause 52B shall be

party to the Retail Energy Code, and shall comply with the Meter Operation Code of Practice in relation to those works.

52C.2 The Company shall be party to the Retail Energy Code, and shall comply with the Meter Operation Code of Practice.

52D. PROVISION OF INFORMATION

Dangerous Incidents

52D.1 Where the Gas Supplier (or any of its contractors or agents) receives a report or enquiry from any person about any matter or incident that does or is likely to:

52D.1.1 cause danger or require urgent attention in relation to the supply or distribution of electricity in the Company's Distribution Services Area through the Distribution System; or

52D.1.2 affect the maintenance of the security, availability and quality of service of the Distribution System,

the Gas Supplier shall notify the Company of such report or enquiry in a prompt and appropriate manner having regard to the nature of the incident to which the report relates. The Gas Supplier shall notify the Company by telephone or post using the telephone number and postal address identified in the Company's Security and Safety of Supplies Statement or such other telephone number as may from time to time be notified in writing by the Company.

Damage or Interference

52D.2 The Gas Supplier shall (and shall ensure that its contractors and agents shall) in a prompt and appropriate manner having regard to the nature of the incident, inform the Company where the Gas Supplier has (or in the case of the Gas Supplier's contractors and agents, such contractors and agents have) reason to believe:

52D.2.1 that there has been damage to the Electrical Plant or Electric Lines owned by the Company; or

52D.2.2 that there has been interference with any electricity metering equipment at an Entry Point or an Exit Point on the Company's Distribution System that has prevented such metering equipment from correctly registering the quantity of electricity supplied,

unless the Gas Supplier believes that the damage or interference was caused by the Company.

52D.3 Where the Gas Supplier has reason to believe that any damage or interference reported by it (or by its contractors or agents) under Clause 52D.2 has been caused by a criminal act, it shall provide the Company with such information as is reasonably required for investigating the incident and resolving any safety concerns arising out of it.

52E. CONFIDENTIALITY RESTRICTIONS ON THE COMPANY

Confidential Information

52E.1 In this Clause 52E, Confidential Information means any information which the Company or any Affiliate or Related Undertaking of the Company:

52E.1.1 receives from the Gas Supplier under this Agreement; or

52E.1.2 receives from any Connectee, which, if received from the Gas Supplier, would fall within Clause 52E.1.1; or

52E.1.3 receives from the Gas Supplier in error, but which would usually be considered to be confidential,

and the provisions of this Clause 52E shall apply to such Confidential Information, save where the Gas Supplier notifies or otherwise gives prior written agreement to the Company that such Confidential Information need not be treated as confidential.

Restrictions on Use and Disclosure

52E.2 Where the Company or any Affiliate or Related Undertaking of the Company receives or acquires Confidential Information, the Company shall (and shall procure that such Affiliate or Related Undertaking shall):

52E.2.1 not use the Confidential Information for any purpose other than as required or expressly permitted under this Agreement or any other agreement entered into between the Company and the Gas Supplier for the provision of services by the Distribution Business of the Company;

52E.2.2 without prejudice to Clause 52E.2.1, not use the Confidential Information in a manner which may obtain for the Company or any Affiliate or Related Undertaking of the Company (as the case may be) any commercial advantage in the operation of a Supply Business;

52E.2.3 not authorise access to nor disclose any Confidential Information other than:

A to such of the employees of the Company or any Affiliate or Related Undertaking of the Company as require to be informed thereof for the effective performance of the Company's obligations under this Section 2C or any other agreement entered into between the Company and the Gas Supplier for the provision of services by the Distribution Business of the Company or for the effective operation of the Distribution Business;

B to such agents, consultants, professional or other advisors, and contractors as require to be informed thereof or to provide advice which is in connection with the operation of the Company's Distribution Business;

C to the Authority;

D information which the Company or any Affiliate or Related Undertaking of the Company (as the case may be) is required or permitted to make disclosure of:

i. in compliance with the duties of the Company or any Affiliate or Related Undertaking of the Company (as the case may be) under the Act or any other requirement of a Competent Authority;

ii. in compliance with the provisions of any Relevant Instruments;

iii. in compliance with any other requirement of law;

iv. in response to a requirement of any Stock Exchange or the Panel on Takeovers and Mergers or any other regulatory authority (whether or not similar to those bodies); or

v. pursuant to the arbitration rules of the Electricity Arbitration Association or pursuant to any judicial or other arbitral process or tribunal of competent jurisdiction; or

E for the purposes levying charges (where applicable); and

52E.2.4 take all reasonable steps to ensure that any such person as is referred to in sub-clauses 52E.2.3(A) and (B) to whom the Company or any Affiliate or Related Undertaking of the Company (as the case may be) discloses Confidential Information does not use that Confidential Information for any purpose other than that for which it was provided and does not disclose that Confidential Information otherwise than in accordance with the provisions of this Clause 52E.

Other Matters

52E.3 Not Used.

52E.4 The Gas Supplier agrees that where the Company uses or discloses Confidential Information in accordance with this Clause 52E, such Confidential Information need not be treated as confidential for the purposes of Condition 42 of the Distribution Licence to the extent of such use or disclosure.

52E.5 The Company undertakes that, in any case where information to be disclosed by it under this Agreement may lawfully be disclosed only with the prior consent of the person to whom the information relates, it will use its reasonable endeavours to obtain such prior consent so as to enable it, or the Gas Supplier as the case may be, promptly to perform its obligations under this Section 2C, provided that where the consent of the Connectee is required to be obtained for the purposes of this Section 2C, the Gas Supplier (and not the Company) shall have the obligation to obtain such consent under Clause 52F.

52F. CONFIDENTIALITY RESTRICTIONS ON THE GAS SUPPLIER

52F.1 In this Clause 52F, Confidential Information means:

52F.1.1 any information (whether in writing, in disc or electronic form, or otherwise) which has been properly disclosed by the Company under this Agreement but which would usually be considered to be confidential; and

52F.1.2 any information which is marked as confidential or which is provided together with a covering letter indicating its confidential nature,

and, to the extent that any Affiliate or Related Undertaking of the Gas Supplier is in possession of Confidential Information, the Gas Supplier shall procure that such Affiliate or Related Undertaking observes the restrictions in Clauses 52F.2 to 52F.4 (inclusive) as if in each such Clause there was substituted for the Gas Supplier the name of the Affiliate or Related Undertaking.

Restrictions on Use and Disclosure

52F.2 The Gas Supplier hereby undertakes to the Company that it will preserve the confidentiality of, and not directly or indirectly reveal, report, publish, disclose or transfer or use for its own purposes, Confidential Information except:

52F.2.1 in the circumstances set out in Clause 52F.3;

52F.2.2 to the extent otherwise required or expressly permitted by this Agreement or any other agreement entered into between the Company and the Gas Supplier for the provision of services by the Distribution Business of the Company; or

52F.2.3 with the prior consent in writing of the Company.

52F.3 The circumstances set out in this Clause 52F.3 are:

52F.3.1 where the Confidential Information, before it is furnished to the Gas Supplier, is in the public domain;

52F.3.2 where the Confidential Information:

A is acquired by the Gas Supplier in circumstances in which this Clause 52F does not apply;

B is acquired by the Gas Supplier in circumstances in which this Clause 52F does apply and thereafter ceases to be subject to the restrictions imposed by this Clause 52F; or

C (after it is furnished to the Gas Supplier) enters the public domain,

otherwise (in any such case) than as a result of (i) a breach by the Gas Supplier of its obligations in this Clause 52F; or (ii) a breach by the person who disclosed that Confidential Information of that person's confidentiality obligation, and the Gas Supplier is aware of such breach;

52F.3.3 if the Gas Supplier is required or permitted to make disclosure of the Confidential Information to any person:

A in compliance with any requirement of a Competent Authority;

B in compliance with the provisions of any Relevant Instrument;

C in compliance with any other law or regulation;

D in response to a requirement of any Stock Exchange or the Panel on Takeovers and Mergers or any other regulatory authority (whether or not similar to those bodies); or

E pursuant to the rules of the Electricity Arbitration Association or pursuant to any judicial or arbitral process or tribunal of competent jurisdiction; or

52F.3.4 the disclosure of Confidential Information to any Affiliate or Related Undertaking of the Gas Supplier, to the employees, directors, agents, consultants and professional advisers of the Gas Supplier or any Affiliate or Related Undertaking of the Gas Supplier, in each case on the basis set out in Clause 52F.4.

52F.4 The Gas Supplier shall take all reasonable steps to ensure that any such person as is referred to in Clause 52F.3.4 to whom the Gas Supplier discloses Confidential Information does not use that Confidential Information for any purpose other than that for which it is provided and does not disclose that Confidential Information otherwise than in accordance with this Clause 52F.

Other Matters

52F.5 Not Used.

52F.6 The Gas Supplier undertakes that, in any case where information to be disclosed under this Agreement may lawfully be disclosed only with the prior consent of the person to whom the information relates, it will use its reasonable endeavours to obtain such prior consent so as to enable it or (as the case may be) the Company promptly to perform its obligations under this Section 2C.

SECTION 2.D - ELECTRICITY SUPPLIER TO GAS SUPPLIER RELATIONSHIPS

SCOPE OF SECTION 2C

This Section 2D and the Schedules referred to in it set out the terms and conditions pursuant to which a Supplier Party shall allow a Gas Supplier Party to undertake Permitted Third Party Metering Works, and thereafter to maintain any Smart Metering Comms Hub Devices and/or Relevant Alt HAN Equipment installed pursuant to those works.

52G. INTERPRETATION OF SECTION 2D

Party Obligations

52G.1 In this Section 2D, in the Schedules when applied pursuant to this Section 2D, and in the terms defined in Clause 1 when used in this Section 2D or those Schedules, a reference to an Electricity Supplier is:

52G.1.1 a reference to each Party that is a Supplier Party separately and individually and, where an obligation is imposed on, or a right granted to, an Electricity Supplier, that obligation is imposed on, and that right is granted to, each such Party separately and independently; and

52G.1.2 when made in relation to a Gas Supplier and any period of time, a reference to the Supplier Party who is (or was), during that period, Registered in respect of the Metering Point which is a Third Party Metering Point for the Gas Supplier, because either (a) that Metering Point relates to a Premises for which the Gas Supplier is (or was) the Responsible Gas Supplier during that period, or (b) that Metering Point has Proximate Metering Equipment with the Metering Point referred to in limb (a).

52G.2 In this Section 2D, in the Schedules when applied pursuant to this Section 2D, and in the terms defined in Clause 1 when used in this Section 2D or those Schedules, a reference to a Gas Supplier is:

52G.2.1 a reference to each Party that is a Gas Supplier Party separately and individually and, where an obligation is imposed on, or a right is granted to, a Gas Supplier, that obligation is imposed on, and that right is granted to, each such Party separately and independently; and

52G.2.2 when made in relation to an Electricity Supplier and any period of time, a reference to the Gas Supplier Party who is (or was), during that period, the Responsible Gas Supplier for either: (a) a Premises in respect of which the Electricity Supplier is (or was) Registered during that period; or (b) a Premises which has Proximate Metering Equipment with a Metering Point in respect of which the Electricity Supplier is (or was) Registered during that period.

52G.3 This Section 2D, and the Schedules when applied pursuant to it, shall:

52G.3.1 only create rights and obligations between Supplier Parties (on the one hand) and Gas Supplier Parties (on the other), and shall not create rights or obligations between Supplier Parties and other Supplier Parties or between Gas Supplier Parties and other Gas Supplier Parties; and

52G.3.2 not apply to the OTSO Party, to the Crowded Meter Room Coordinator, to SIP Parties or to DNO/IDNO Parties.

References in Relation to Electricity Suppliers and Gas Suppliers

52G.4 In this Section 2D, in the Schedules when applied pursuant to this Section 2D, and in the terms defined in Clause 1 when used in this Section 2D or those Schedules, unless the context otherwise requires,

references to:

52G.4.1 an Exit Point or Entry Point are, when made in relation to an Electricity Supplier and any period of time, references to an Exit Point or Entry Point relating to a Metering Point for which that Electricity Supplier is (or was) Registered during that period;

52G.4.2 a Premises are, when made in relation to a Gas Supplier and any period of time, references to a Premises for which the Gas Supplier is (or was) the Responsible Gas Supplier during that period of time;

52G.4.3 a Connectee, Connected Installation, Contract, Premises or Smart Metering Comms Hub Device, are (when made in relation to an Electricity Supplier and any period of time) references to a Connectee, Connected Installation, Contract, Premises, Relevant Alt HAN Equipment or Smart Metering Comms Hub Device relating to a Metering Point for which that Electricity Supplier is (or was) Registered during that period;

52G.4.4 a Connectee, Connected Installation, Contract, Exit Point, Entry Point, Metering Point or Smart Metering Comms Hub Device, are (when made in relation to a Gas Supplier and any period of time) references to a Connectee, Connected Installation, Contract, Exit Point, Entry Point, Metering Point, Relevant Alt HAN Equipment or Smart Metering Comms Hub Device relating to a Premises for which the Gas Supplier was the Responsible Gas Supplier during that period of time; or

52G.4.5 a Distribution System or Company, are respectively (when made in relation to an Exit Point or Entry Point) references to the Distribution System associated with that Exit Point or Entry Point or to the DNO/IDNO Party that operates that Distribution System.

Application Limited to Whole Current Metering

52G.5 This Section 2D shall only apply to Exit Points or Entry Points for which the import or export of electricity is metered directly by putting the full electrical current through the meter (known as ‘whole current metering’).

52H. DE-ENERGISATION AND RE-ENERGISATION WORKS

Requirements for those undertaking Works

52H.1 Any and all Permitted Third Party Metering Works, De-energisation Works and Re-energisation Works carried out by or on behalf of the Gas Supplier pursuant to this Clause 52H shall only be carried out by a person working on behalf of a Gas Meter Asset Manager engaged by the Gas Supplier.

Good Industry Practice

52H.2 The Electricity Supplier and the Gas Supplier shall each act in accordance with Good Industry Practice when carrying out, or procuring the carrying out of, any and all works pursuant to this Clause 52H. Without limitation, the Gas Supplier shall notify a Customer before undertaking any Permitted Third Party Metering Works in respect of the Customer's Metering Point where that Metering Point is a Proximate Metering Point to a Metering Point serving the Premises for which the Gas Supplier is the Responsible Gas Supplier.

Works Undertaken by the Gas Supplier

52H.3 If the Gas Supplier wishes at any time to undertake Permitted Third Party Metering Works in respect of a Third Party Metering Point, then the Gas Supplier may (to the extent reasonably required in order to do so, and with no prior notice to the Electricity Supplier) De-energise the Exit Point and/or Entry Point to which the Third Party Metering Point relates in order to do so; provided that the Gas Supplier Re-energises that Exit Point and/or Entry Point as soon as reasonably practicable thereafter.

52H.4 If the Gas Supplier resolves to De-energise and/or Re-energise an Exit Point and/or Entry Point pursuant to Clause 52H.3, then the Gas Supplier shall:

52H.4.1 (subject to Clauses 52H.2 and 52I) decide on the extent and nature of the De-energisation Works and Re-energisation Works, and shall undertake such De-energisation Works and Re-energisation Works at its own cost; and

52H.4.2 comply with the Relevant Instruments and the Distribution Code in relation to the De-energisation Works and Re-energisation Works.

Electricity Supplier's Right to De-energise

52H.5 Notwithstanding the right of the Gas Supplier under this Clause 52H to install a Smart Metering Comms Hub Device and/or Relevant Alt HAN Equipment (and to keep either or both of them installed), the Electricity Supplier may, at any time with no prior notice to the Gas Supplier, De-energise any Exit Point and/or Entry Point if:

52H.5.1 the Electricity Supplier is entitled to do so pursuant to the Contract relating to such Exit Point and/or Entry Point; or

52H.5.2 the Electricity Supplier is entitled to do so pursuant to the Relevant Instruments or Section 2A, 2E or 2F.

52H.6 If the Electricity Supplier resolves to De-energise an Exit Point and/or Entry Point pursuant to Clause 52H.5, then:

52H.6.1 (subject to Clauses 52H.2 and 52I) the Electricity Supplier shall decide on the extent and nature of the De-energisation Works required to De-energise the Exit Point and/or Entry Point;

52H.6.2 the Electricity Supplier shall Re-energise the Exit Point and/or Entry Point as soon as is reasonably practicable after the circumstance giving rise to such De-energisation has ended (and shall determine the extent and nature of the Re-energisation Works required to Re-energise the Exit Point and/or Entry Point); and

52H.6.3 there shall be no charge to the Gas Supplier in respect of such De-energisation Works and/or Re-energisation Works.

Other Matters

52H.7 For the avoidance of doubt, the Gas Supplier shall only be entitled to Re-energise an Exit Point and/or Entry Point that has been De-energised by (or on behalf of) the Gas Supplier pursuant to this Agreement.

52H.8 In undertaking De-energisation Works and Re-energisation Works as permitted by this Clause 52H, the Electricity Supplier may reposition the Smart Metering Comms Hub Device and/or Relevant Alt HAN Equipment (or any part of either or both of them) on the meter board (but may not otherwise alter the

position of such device or equipment, subject to any other agreement between the Gas Supplier and the Electricity Supplier).

52H.9 In undertaking De-energisation Works and Re-energisation Works pursuant to this Clause 52H, the Gas Supplier may reposition the electricity metering equipment (or any part of it) on the meter board (but may not otherwise alter the position of the electricity metering equipment).

52H.10 Subject to any other agreement between the Gas Supplier and the Electricity Supplier, where the Gas Supplier has no further need for the Smart Metering Comms Hub Device and/or Relevant Alt HAN Equipment (and there is no reasonable prospect of the Gas Supplier, or any future Gas Supplier, needing to use that Smart Metering Comms Hub Device and/or Relevant Alt HAN Equipment in the future), then the Gas Supplier shall remove that Smart Metering Comms Hub Device and/or Relevant Alt HAN Equipment (or, to the extent consistent with Good Industry Practice, render either or both of them inoperable in accordance with Good Industry Practice). Where a Smart Metering Comms Hub Device and/or Relevant Alt HAN Equipment has been rendered inoperable pursuant to this Clause 52H.10, then the Electricity Supplier shall at any time thereafter be entitled to remove and dispose of that Smart Metering Comms Hub Device and/or Relevant Alt HAN Equipment.

Non-Interference

52H.11 The Electricity Supplier consents to the Gas Supplier (and its Gas Meter Asset Manager when acting in its capacity as such) interfering with the electricity metering equipment at the Premises to the extent it is necessary to do so in exercising the Gas Supplier's rights or complying with its obligations under this Clause 52H or Clause 52I. The Gas Supplier shall not (and shall ensure that its Gas Meter Asset Manager when acting in its capacity as such shall not) otherwise interfere with the electricity metering equipment at the Premises (subject to any contrary agreement between the Gas Supplier and the Electricity Supplier).

52H.12 Notwithstanding the consent given by the Electricity Supplier under Clause 52H.11, the Gas Supplier shall indemnify the Electricity Supplier against all actions, proceedings, costs, demands, claims, expenses, liability, loss or damage arising:

52H.12.1 directly from physical damage to the property of any person caused by the Gas Supplier's Gas Meter Asset Manager in exercising the Gas Supplier's rights under this Clause 52H (but excluding liability for any loss of profit, loss of revenue, loss of use, loss of contract or loss of goodwill, and subject to a cap of £1 million per incident or series of related incidents); and/or

52H.12.2 directly or indirectly from any claim by the owner of the electricity metering equipment at the Premises or by the Electricity Supplier's Meter Operator Agent that the Electricity Supplier is in breach of its contracts with such persons in providing consent under Clause 52H.11 (but only to the extent such contracts were entered into prior to 1 October 2013, and subject to a cap of £1 million per contract).

52H.13 The Gas Supplier shall ensure that the Electricity Supplier is entitled to interfere with the Smart Metering Comms Hub and/or Relevant Alt HAN Equipment to the extent it is necessary to do so in exercising the Electricity Supplier's rights or complying with its obligations under this Clause 52H or Clause 52I. The Electricity Supplier shall not otherwise interfere with the Smart Metering Comms Hub and/or Relevant Alt HAN Equipment (subject to any contrary agreement between the Gas Supplier and the Electricity Supplier).

52H.14 For the purposes of Clause 53.4, the Electricity Supplier and the Gas Supplier agree that matters relating to Smart Metering Comms Hub Devices and/or Relevant Alt HAN Equipment that are not the subject of express rights and obligations under this Section 2D (including the standard to which such devices and equipment

are to be maintained) are outside of the subject matter of this Agreement (and neither the Electricity Supplier nor the Gas Supplier waive their rights or remedies under Clause 53.4 in respect of the same).

52I. METER OPERATION CODE OF PRACTICE

52I.1 The Gas Supplier shall procure that the Gas Meter Asset Manager which carries out Permitted Third Party Metering Works, De-energisation Works and/or Re-energisation Works pursuant to Clause 52H shall be party to the Retail Energy Code, and shall comply with the Meter Operation Code of Practice in relation to those works.

52I.2 The Electricity Supplier shall procure that the Meter Operator Agent appointed for each Metering Point supplied by the Electricity Supplier shall be party to the Retail Energy Code, and shall comply with the Meter Operation Code of Practice in relation to that Metering Point.

52J. PROVISION OF INFORMATION

Danger, Damage or Interference

52J.1 The Gas Supplier shall (and shall ensure that its contractors and agents shall) in a prompt and appropriate manner having regard to the nature of the incident, inform the Electricity Supplier where the Gas Supplier has (or in the case of the Gas Supplier's contractors and agents, such contractors and agents have) reason to believe that:

52J.1.1 the flow of electricity through the Exit Point has been interrupted (and remains interrupted);

52J.1.2 there has been interference with any electricity metering equipment at a Premises that has prevented such metering equipment from correctly registering the quantity of electricity supplied; and/or

52J.1.3 the electricity metering equipment at the Premises otherwise presents a danger,

unless the Gas Supplier believes that the Electricity Supplier has caused such circumstance to arise.

52J.2 The Electricity Supplier shall (and shall ensure that its contractors and agents shall) in a prompt and appropriate manner having regard to the nature of the incident, inform the Gas Supplier where the Electricity Supplier has (or in the case of the Electricity Supplier's contractors and agents, such contractors and agents have) reason to believe that there has been damage to or interference with the Smart Metering Comms Hub Device and/or Relevant Alt HAN Equipment (unless the Electricity Supplier believes that the damage or interference was caused by the Gas Supplier), or that the Smart Metering Comms Hub Device and/or Relevant Alt HAN Equipment otherwise presents a danger.

52J.3 For the purposes of giving notice under Clause 52J.1 or 52J.2, the Gas Supplier or the Electricity Supplier (as applicable) shall use its reasonable endeavours to establish the identity of the Electricity Supplier or Gas Supplier (as applicable) to whom notice should be given. Where the Gas Supplier or the Electricity Supplier (as applicable) is unable to establish the identity of the person to whom notice should be given, it shall give such notice to the United Kingdom Revenue Protection Association.

52K. CONFIDENTIALITY RESTRICTIONS ON THE GAS SUPPLIER

Confidential Information

52K.1 In this Clause 52K, Confidential Information means:

52K.1.1 any information (whether in writing, in disc or electronic form, or otherwise) which has been properly disclosed by the Electricity Supplier under this Agreement but which would usually be considered to be confidential; and

52K.1.2 any information which is marked as confidential or which is provided together with a covering letter indicating its confidential nature,

and, to the extent that any Affiliate or Related Undertaking of the Gas Supplier is in possession of Confidential Information, the Gas Supplier shall procure that such Affiliate or Related Undertaking observes the restrictions in Clauses 52K.2 to 52K.4 (inclusive) as if in each such Clause there was substituted for the Gas Supplier the name of the Affiliate or Related Undertaking.

Restrictions on Use and Disclosure

52K.2 The Gas Supplier hereby undertakes to the Electricity Supplier that it will preserve the confidentiality of, and not directly or indirectly reveal, report, publish, disclose or transfer or use for its own purposes, Confidential Information except:

52K.2.1 in the circumstances set out in Clause 52K.3;

52K.2.2 to the extent otherwise required or expressly permitted by this Agreement or any other agreement entered into between the Electricity Supplier and the Gas Supplier; or

52K.2.3 with the prior consent in writing of the Electricity Supplier.

52K.3 The circumstances set out in this Clause 52K.3 are:

52K.3.1 where the Confidential Information, before it is furnished to the Gas Supplier, is in the public domain;

52K.3.2 where the Confidential Information:

A is acquired by the Gas Supplier in circumstances in which this Clause 52K does not apply;

B is acquired by the Gas Supplier in circumstances in which this Clause 52K does apply and thereafter ceases to be subject to the restrictions imposed by this Clause 52K; or

C (after it is furnished to the Gas Supplier) enters the public domain,

otherwise (in any such case) than as a result of (i) a breach by the Gas Supplier of its obligations in this Clause 52K; or (ii) a breach by the person who disclosed that Confidential Information of that person's confidentiality obligation, and the Gas Supplier is aware of such breach;

52K.3.3 if the Gas Supplier is required or permitted to make disclosure of the Confidential Information to any person:

A in compliance with any requirement of a Competent Authority;

B in compliance with the provisions of any Relevant Instrument;

C in compliance with any other law or regulation;

D in response to a requirement of any Stock Exchange or the Panel on Takeovers and Mergers or any other regulatory authority (whether or not similar to those bodies); or

E pursuant to the rules of the Electricity Arbitration Association or pursuant to any judicial or arbitral process or tribunal of competent jurisdiction; or

52K.3.4 the disclosure of Confidential Information to any Affiliate or Related Undertaking of the Gas Supplier, to the employees, directors, agents, consultants and professional advisers of the Gas Supplier or any Affiliate or Related Undertaking of the Gas Supplier, in each case on the basis set out in Clause 52K.4.

52K.4 The Gas Supplier shall take all reasonable steps to ensure that any such person as is referred to in Clause 52K.3.4 to whom the Gas Supplier discloses Confidential Information does not use that Confidential Information for any purpose other than that for which it is provided and does not disclose that Confidential Information otherwise than in accordance with this Clause 52K.

Other Matters

52K.5 Not Used.

52L. CONFIDENTIALITY RESTRICTIONS ON THE ELECTRICITY SUPPLIER

Confidential Information

52L.1 In this Clause 52L, Confidential Information means:

52L.1.1 any information (whether in writing, in disc or electronic form, or otherwise) which has been properly disclosed by the Gas Supplier under this Agreement but which would usually be considered to be confidential; and

52L.1.2 any information which is marked as confidential or which is provided together with a covering letter indicating its confidential nature,

and, to the extent that any Affiliate or Related Undertaking of the Electricity Supplier is in possession of Confidential Information, the Electricity Supplier shall procure that such Affiliate or Related Undertaking observes the restrictions in Clauses 52L.2 to 52L.4 (inclusive) as if in each such Clause there was substituted for the Electricity Supplier the name of the Affiliate or Related Undertaking.

Restrictions on Use and Disclosure

52L.2 The Electricity Supplier hereby undertakes to the Gas Supplier that it will preserve the confidentiality of, and not directly or indirectly reveal, report, publish, disclose or transfer or use for its own purposes, Confidential Information except:

52L.2.1 in the circumstances set out in Clause 52L.3;

52L.2.2 to the extent otherwise required or expressly permitted by this Agreement or any other agreement entered into between the Electricity Supplier and the Gas Supplier; or

52L.2.3 with the prior consent in writing of the Gas Supplier.

52L.3 The circumstances set out in this Clause 52L.3 are:

52L.3.1 where the Confidential Information, before it is furnished to the Electricity Supplier, is in the public domain;

52L.3.2 where the Confidential Information:

A is acquired by the Electricity Supplier in circumstances in which this Clause 52L does not apply;

B is acquired by the Electricity Supplier in circumstances in which this Clause 52L does apply and thereafter ceases to be subject to the restrictions imposed by this Clause 52L; or

C (after it is furnished to the Electricity Supplier) enters the public domain,

otherwise (in any such case) than as a result of (i) a breach by the Electricity Supplier of its obligations in this Clause 52L; or (ii) a breach by the person who disclosed that Confidential Information of that person's confidentiality obligation, and the Electricity Supplier is aware of such breach;

52L.3.3 if the Electricity Supplier is required or permitted to make disclosure of the Confidential Information to any person:

A in compliance with any requirement of a Competent Authority;

B in compliance with the provisions of any Relevant Instrument;

C in compliance with any other law or regulation;

D in response to a requirement of any Stock Exchange or the Panel on Takeovers and Mergers or any other regulatory authority (whether or not similar to those bodies); or

E pursuant to the rules of the Electricity Arbitration Association or pursuant to any judicial or arbitral process or tribunal of competent jurisdiction; or

52L.3.4 the disclosure of Confidential Information to any Affiliate or Related Undertaking of the Electricity Supplier, to the employees, directors, agents, consultants and professional advisers of the Electricity Supplier or any Affiliate or Related Undertaking of the Electricity Supplier, in each case on the basis set out in Clause 52L.4.

52L.4 The Electricity Supplier shall take all reasonable steps to ensure that any such person as is referred to in Clause 52L.3.4 to whom the Electricity Supplier discloses Confidential Information does not use that Confidential Information for any purpose other than that for which it is provided and does not disclose that Confidential Information otherwise than in accordance with this Clause 52L.

Other Matters

52L.5 Not Used.

SECTION 2.E - DISTRIBUTOR TO THIRD PARTY ELECTRICITY SUPPLIER RELATIONSHIPS

SCOPE OF SECTION 2E

This Section 2E and the Schedules referred to in it set out the terms and conditions pursuant to which a DNO/IDNO Party shall allow a Third Party Electricity Supplier to undertake Permitted Third Party Metering Works.

52M. INTERPRETATION OF SECTION 2E

Party Obligations

52M.1 In this Section 2E, in the Schedules when applied pursuant to this Section 2E, and in the terms defined in Clause 1 when used in this Section 2E or those Schedules, a reference to a "Company" is a reference to each Party that is either a DNO Party or an IDNO Party separately and individually and, where an obligation is imposed on, or a right granted to, a Company, that obligation is imposed on, and that right is granted to, each such Party separately and independently.

52M.2 In this Section 2E, in the Schedules when applied pursuant to this Section 2E, and in the terms defined in Clause 1 when used in this Section 2E or those Schedules, a reference to a Third Party Electricity Supplier is:

52M.2.1 a reference to each Party that is a Supplier Party separately and individually and, where an obligation is imposed on, or a right is granted to, a Third Party Electricity Supplier, that obligation is imposed on, and that right is granted to, each such Party separately and independently; and

52M.2.2 when made in relation to a Company and any period of time, a reference to each Supplier Party (separately, individually and to the relevant extent) who is (or was), during that period, Registered for a Metering Point relating to an Entry Point or an Exit Point on that Company's Distribution System for which there is (or was) one or more Third Party Metering Points.

52M.3 This Section 2E, and the Schedules when applied pursuant to it, shall:

52M.3.1 only create rights and obligations between DNO/IDNO Parties (on the one hand) and Supplier Parties (on the other), and shall not create rights or obligations between DNO/IDNO Parties and other DNO/IDNO Parties or between Supplier Parties and other Supplier Parties;

52M.3.2 not apply to the OTSO Party, to the Crowded Meter Room Coordinator, to SIP Parties, to CVA Registrants or to Gas Supplier Parties;

52M.3.3 only create obligations between a Company and a Third Party Electricity Supplier to the extent that, and in relation to those periods for which, that Third Party Electricity Supplier is (or was) Registered for a Metering Point relating to an Entry Point or an Exit Point on that Company's Distribution System for which there is (or was) one or more Third Party Metering Points; and

52M.3.4 not impose any obligations between a Company and a Third Party Electricity Supplier in relation to periods for which that Third Party Electricity Supplier is (or was) not Registered for a Metering Point relating to an Entry Point or an Exit Point on that Company's Distribution System for which there is (or was) one or more Third Party Metering Points.

References in Relation to Companies

52M.4 In this Section 2E, in the Schedules when applied pursuant to this Section 2E, and in the terms defined in

Clause 1 when used in this Section 2E or those Schedules, references to:

52M.4.1 an Entry Point or Exit Point are, when made in relation to a Company, references to an Entry Point or Exit Point on that Company's Distribution System; and

52M.4.2 a Metering Point are, when made in relation to a Company, references to a Metering Point relating to an Entry Point or Exit Point on such Company's Distribution System.

Application Limited to Whole Current Metering

52M.5 This Section 2E shall only apply to Exit Points and/or Entry Points for which the import or export of electricity is metered directly by putting the full electrical current through the meter (known as 'whole current metering').

52N. DE-ENERGISATION AND RE-ENERGISATION WORKS

Requirements for those undertaking Works

52N.1 Any and all Permitted Third Party Metering Works, De-energisation Works and Re-energisation Works carried out by or on behalf of the Third Party Electricity Supplier pursuant to this Clause 52N shall only be carried out by a person working on behalf of a Meter Operator Agent engaged by the Third Party Electricity Supplier.

Good Industry Practice

52N.2 The Third Party Electricity Supplier shall each act in accordance with Good Industry Practice when carrying out, or procuring the carrying out of, any and all works pursuant to this Clause 52N.

Works Undertaken by the Third Party Electricity Supplier

52N.3 If the Third Party Electricity Supplier wishes at any time to undertake Permitted Third Party Metering Works in respect of a Third Party Metering Point, then the Third Party Electricity Supplier may (to the extent reasonably required in order to do so, and with no prior notice to the Company) De-energise the Exit Point and/or Entry Point to which the Third Party Metering Point relates in order to do so; provided that the Third Party Electricity Supplier Re-energises that Exit Point and/or Entry Point as soon as reasonably practicable thereafter.

52N.4 If the Third Party Electricity Supplier resolves to De-energise and/or Re-energise an Exit Point and/or Entry Point pursuant to Clause 52N.3, then the Third Party Electricity Supplier shall:

52N.4.1 (subject to Clauses 52N.2 and 52O) decide on the extent and nature of the De-energisation Works and Re-energisation Works, and shall undertake such De-energisation Works and Re-energisation Works at its own cost; and

52N.4.2 comply with the Relevant Instruments and the Distribution Code in relation to the De-energisation Works and Re-energisation Works.

Other Matters

52N.5 For the avoidance of doubt, the Third Party Electricity Supplier shall only be entitled to Re-energise an Exit Point and/or Entry Point that has been De-energised by (or on behalf of) the Third Party Electricity Supplier

pursuant to this Agreement.

Non-Interference

52N.6 The Company shall ensure that the Third Party Electricity Supplier (and its Meter Operator Agent when acting in its capacity as such) is entitled to interfere with the Distribution System to the extent it is necessary to do so in exercising the Third Party Electricity Supplier's rights or complying with its obligations under this Clause 52N or Clause 52O. The Third Party Electricity Supplier shall not (and shall ensure that its Meter Operator Agent when acting in its capacity as such shall not) otherwise interfere with the Distribution System (subject to any contrary agreement between the Third Party Electricity Supplier and the Company, including as set out in Section 2A of this Agreement).

52N.7 The Third Party Electricity Supplier shall indemnify the Company against all actions, proceedings, costs, demands, claims, expenses, liability, loss or damage arising directly from physical damage to the property of any person caused by the Third Party Electricity Supplier's Meter Operator Agent in exercising the Third Party Electricity Supplier's rights under this Clause 52N (but excluding liability for any loss of profit, loss of revenue, loss of use, loss of contract or loss of goodwill, and subject to a cap of £1 million per incident or series of related incidents).

52O. METER OPERATION CODE OF PRACTICE

52O.1 The Third Party Electricity Supplier shall procure that the Meter Operator Agent which carries out Permitted Third Party Metering Works, De-energisation Works and/or Re-energisation Works pursuant to Clause 52N shall be party to the Retail Energy Code, and shall comply with the Meter Operation Code of Practice in relation to those works.

52P. PROVISION OF INFORMATION

Interference

52P.1 Without prejudice to the Third Party Electricity Supplier's obligations under Clause 30 (Provision of Information), the Third Party Electricity Supplier shall (and shall ensure that its contractors and agents shall) in a prompt and appropriate manner having regard to the nature of the incident, inform the Company where the Third Party Electricity Supplier has (or in the case of the Third Party Electricity Supplier's contractors and agents, such contractors and agents have) reason to believe that there has been interference with any electricity metering equipment relating to Third Party Metering Points that has prevented such metering equipment from correctly registering the quantity of electricity supplied unless the Third Party Electricity Supplier believes that the damage or interference was caused by the Company.

52P.2 Where the Third Party Electricity Supplier has reason to believe that any damage or interference reported by it (or by its contractors or agents) under Clause 52P.1 has been caused by a criminal act, it shall provide the Company with such information as is reasonably required for investigating the incident and resolving any safety concerns arising out of it.

SECTION 2.F - ELECTRICITY SUPPLIER TO THIRD PARTY ELECTRICITY SUPPLIER RELATIONSHIPS

SCOPE OF SECTION 2F

This Section 2F and the Schedules referred to in it set out the terms and conditions pursuant to which a Supplier Party shall allow a Third Party Electricity Supplier to undertake Permitted Third Party Metering Works.

52Q. INTERPRETATION OF SECTION 2F

Party Obligations

52Q.1 In this Section 2F, in the Schedules when applied pursuant to this Section 2F, and in the terms defined in Clause 1 when used in this Section 2F or those Schedules, a reference to an "Electricity Supplier" is:

52Q.1.1 a reference to each Party that is a Supplier Party separately and individually and, where an obligation is imposed on, or a right granted to, an Electricity Supplier, that obligation is imposed on, and that right is granted to, each such Party separately and independently;

52Q.1.2 when made in relation to a Metering Point and any period of time, a reference to the Supplier Party who is (or was), during that period, Registered in respect of the Metering Point; and

52Q.1.3 when made in relation to a Third Party Electricity Supplier and any period of time, a reference to the Supplier Party who is (or was), during that period, Registered in respect of a Metering Point for which the Third Party Electricity Supplier is (or was) a Third Party Electricity Supplier during that period (because the Metering Point for which the Electricity Supplier is Registered has Proximate Metering Equipment with a Metering Point for which the Third Party Electricity Supplier Party is Registered).

52Q.2 In this Section 2F, in the Schedules when applied pursuant to this Section 2F, and in the terms defined in Clause 1 when used in this Section 2F or those Schedules, a reference to a Third Party Electricity Supplier is:

52Q.2.1 a reference to each Party that is a Supplier Party separately and individually and, where an obligation is imposed on, or a right is granted to, a Third Party Electricity Supplier, that obligation is imposed on, and that right is granted to, each such Party separately and independently; and

52Q.2.2 when made in relation to an Electricity Supplier and any period of time, a reference to each Supplier Party (separately, individually and to the relevant extent) who is (or was), during that period, Registered for a Metering Point which is (or was) a Third Party Metering Point for that Electricity Supplier.

52Q.3 This Section 2F, and the Schedules when applied pursuant to it, shall:

52Q.3.1 only create rights and obligations between Supplier Parties (on the one hand) and other Supplier Parties (on the other);

52Q.3.2 not apply to the OTSO Party, to the Crowded Meter Room Coordinator, to SIP Parties, to DNO/IDNO Parties or to Gas Supplier Parties; and

52Q.3.3 only create right and obligations between Supplier Parties to the extent that, and in relation to those periods for which, the two Supplier Parties are (or were) Registered in respect of Metering Points which are Proximate Metering Points (and not otherwise).

Application Limited to Whole Current Metering

52Q.4 This Section 2F shall only apply to Third Party Metering Points relating to Exit Points and/or Entry Points for which the import or export of electricity is metered directly by putting the full electrical current through the meter (known as 'whole current metering').

52R. PERMITTED THIRD PARTY METERING WORKS AND DE-ENERGISATION AND RE-ENERGISATION WORKS

Requirements for those undertaking Works

52R.1 Any and all Permitted Third Party Metering Works, De-energisation Works and Re-energisation Works carried out by or on behalf of the Third Party Electricity Supplier pursuant to this Clause 52R shall only be carried out by a person working on behalf of a Meter Operator Agent engaged by the Third Party Electricity Supplier.

Good Industry Practice

52R.2 The Third Party Electricity Supplier shall each act in accordance with Good Industry Practice when carrying out, or procuring the carrying out of, any and all works pursuant to this Clause 52R. Without limitation, the Third Party Electricity Supplier shall notify a Customer before undertaking any Permitted Third Party Metering Works in respect of the Customer's Metering Point.

De-Energisation and Re-Energisation Works

52R.3 If the Third Party Electricity Supplier wishes at any time to undertake Permitted Third Party Metering Works in respect of a Third Party Metering Point, then the Third Party Electricity Supplier may (to the extent reasonably required in order to do so, and with no prior notice to the Electricity Supplier) De-energise the Exit Point and/or Entry Point to which the Third Party Metering Point relates in order to do so; provided that the Third Party Electricity Supplier Re-energises that Exit Point and/or Entry Point as soon as reasonably practicable thereafter.

52R.4 If the Third Party Electricity Supplier resolves to De-energise and/or Re-energise an Exit Point and/or Entry Point pursuant to Clause 52R.3, then the Third Party Electricity Supplier shall:

52R.4.1 (subject to Clauses 52R.2 and 52S) decide on the extent and nature of the De-energisation Works and Re-energisation Works, and shall undertake such De-energisation Works and Re-energisation Works at its own cost; and

52R.4.2 comply with the Relevant Instruments and the Distribution Code in relation to the De-energisation Works and Re-energisation Works.

52R.5 For the avoidance of doubt, the Third Party Electricity Supplier shall only be entitled to Re energise an Exit Point and/or Entry Point that has been De-energised by (or on behalf of) the Third Party Electricity Supplier pursuant to this Agreement.

Permitted Third Party Metering Works

52R.6 The Electricity Supplier consents to the Third Party Electricity Supplier (and its Meter Operator Agent when acting in its capacity as such) undertaking the Permitted Third Party Meter Works.

Non-Interference

52R.7 The Electricity Supplier consents to the Third Party Electricity Supplier (and its Meter Operator Agent when acting in its capacity as such) interfering with the electricity metering equipment for the Metering Point for which the Electricity Supplier is Registered to the extent it is necessary to do so in exercising the Third Party Electricity Supplier's rights or complying with its obligations under this Clause 52R or Clause 52S. The Third Party Electricity Supplier shall not (and shall ensure that its Meter Operator Agent when acting in its capacity as such shall not) otherwise interfere with the electricity metering equipment for the Metering Point for which the Electricity Supplier is Registered (subject to any contrary agreement between the Third Party Electricity Supplier and the Electricity Supplier).

52R.8 Notwithstanding the consent given by the Electricity Supplier under Clause 52R.7, the Third Party Electricity Supplier shall indemnify the Electricity Supplier against all actions, proceedings, costs, demands, claims, expenses, liability, loss or damage arising:

52R.8.1 directly from physical damage to the property of any person caused by the Third Party Electricity Supplier's Meter Operator Agent in exercising the Third Party Electricity Supplier's rights under this Clause 52R (but excluding liability for any loss of profit, loss of revenue, loss of use, loss of contract or loss of goodwill, and subject to a cap of £1 million per incident or series of related incidents); and/or

52R.8.2 directly or indirectly from any claim, by the owner of the electricity metering equipment or the Meter Operator Agent for (in each case) the Metering Point for which the Electricity Supplier is Registered, that the Electricity Supplier is in breach of its contracts with such persons in providing consent under Clause 52R.7 (but only to the extent such contracts were entered into prior to 24 July 2018, and subject to a cap of £1 million per contract).

52S. METER OPERATION CODE OF PRACTICE

52S.1 The Third Party Electricity Supplier shall procure that the Meter Operator Agent which carries out any and all works in respect of a Third Party Metering Point pursuant to Clause 52R shall be party to the Retail Energy Code, and shall comply with the Meter Operation Code of Practice in relation to those works.

52T. PROVISION OF INFORMATION

Danger, Damage or Interference

52T.1 The Third Party Electricity Supplier shall (and shall ensure that its contractors and agents shall) in a prompt and appropriate manner having regard to the nature of the incident, inform the Electricity Supplier where the Third Party Electricity Supplier has (or in the case of the Third Party Electricity Supplier's contractors and agents, such contractors and agents have) reason to believe that:

52T.1.1 the flow of electricity through the Exit Point to which the Third Party Metering Point relates has been interrupted (and remains interrupted);

52T.1.2 there has been interference with any electricity metering equipment for the Third Party Metering Point that has prevented such metering equipment from correctly registering the quantity of electricity supplied; and/or

52T.1.3 the electricity metering equipment for the Third Party Metering Point otherwise presents a danger,

unless the Third Party Electricity Supplier believes that the Electricity Supplier has caused such circumstance to arise.

52T.2 For the purposes of giving notice under Clause 52T.1, the Third Party Electricity Supplier shall use its reasonable endeavours to establish the identity of the Electricity Supplier to whom notice should be given. Where the Third Party Electricity Supplier is unable to establish the identity of the person to whom notice should be given, it shall give such notice to the United Kingdom Revenue Protection Association.

52U. CONFIDENTIALITY RESTRICTIONS FOR SECTION 2F

Confidential Information

52U.1 In this Clause 52U, "Confidential Information" means:

52U.1.1 any information (whether in writing, in disc or electronic form, or otherwise) which has been properly disclosed to a Supplier Party under this Section 2F but which would usually be considered to be confidential; and

52U.1.2 any information which is marked as confidential or which is provided together with a covering letter indicating its confidential nature,

and, to the extent that any Affiliate or Related Undertaking of the Supplier Party is in possession of Confidential Information, the Supplier Party shall procure that such Affiliate or Related Undertaking observes the restrictions in Clauses 52U.2 to 52U.4 (inclusive) as if in each such Clause there was substituted for the Supplier Party the name of the Affiliate or Related Undertaking.

Restrictions on Use and Disclosure

52U.2 Each Supplier Party undertakes that it will preserve the confidentiality of, and not directly or indirectly reveal, report, publish, disclose or transfer or use for its own purposes, Confidential Information except:

52U.2.1 in the circumstances set out in Clause 52U.3;

52U.2.2 to the extent otherwise required or expressly permitted by this Agreement or any other agreement entered into between the Supplier Parties; or

52U.2.3 with the prior consent in writing of the other Supplier Party.

52U.3 The circumstances set out in this Clause 52U.3 are:

52U.3.1 where the Confidential Information, before it is furnished to the Supplier Party, is in the public domain;

52U.3.2 where the Confidential Information:

A is acquired by the Supplier Party in circumstances in which this Clause 52U does not apply;

B is acquired by the Supplier Party in circumstances in which this Clause 52U does apply, and thereafter ceases to be subject to the restrictions imposed by this Clause 52U; or

C after it is furnished to the Supplier Party, enters the public domain,

otherwise (in any such case) than as a result of (i) a breach by the Supplier Party of its obligations in this Clause 52U; or (ii) a breach by the person who disclosed that Confidential Information of that person's confidentiality obligation, and the Supplier Party is aware of such breach;

52U.3.3 if the Supplier Party is required or permitted to make disclosure of the Confidential Information to any person:

A in compliance with any requirement of a Competent Authority;

B in compliance with the provisions of any Relevant Instrument;

C in compliance with any other law or regulation;

D in response to a requirement of any Stock Exchange or the Panel on Takeovers and Mergers or any other regulatory authority (whether or not similar to those bodies); or

E pursuant to the rules of the Electricity Arbitration Association or pursuant to any judicial or arbitral process or tribunal of competent jurisdiction; or

52U.3.4 the disclosure of Confidential Information to any Affiliate or Related Undertaking of the Supplier Party, to the employees, directors, agents, consultants and professional advisers of the Supplier Party or any Affiliate or Related Undertaking of the Supplier Party, in each case on the basis set out in Clause 52U.4.

52U.4 Each Supplier Party shall take all reasonable steps to ensure that any such person as is referred to in Clause 52U.3.4 to whom the Supplier Party discloses Confidential Information does not use that Confidential Information for any purpose other than that for which it is provided and does not disclose that Confidential Information otherwise than in accordance with this Clause 52U.

SECTION 2.G - DISTRIBUTOR/SUPPLIER TO CROWDED METER ROOM COORDINATOR RELATIONSHIPS

SCOPE OF SECTION 2G

This Section 2G sets out the terms and conditions pursuant to which each DNO/IDNO Party and each Supplier Party shall allow the Crowded Meter Room Coordinator to undertake Crowded Meter Room Works.

52V. INTERPRETATION OF SECTION 2G

Party Obligations

52V.1 In this Section 2G and in the terms defined in Clause 1 when used in this Section 2G:

52V.1.1 each reference to the "Company" is a reference to each Party that is either a DNO Party or an IDNO Party separately and individually and, where an obligation is imposed on, or a right granted to, the Company, that obligation is imposed on, and that right is granted to, each such Party separately and independently; and

52V.1.2 each reference to the "Electricity Supplier" is: (a) a reference to each Party that is a Supplier Party separately and individually and, where an obligation is imposed on, or a right granted to, the Electricity Supplier, that obligation is imposed on, and that right is granted to, each such Party separately and independently; and (b) when made in relation to a Metering Point and any period of time, a reference to the Supplier Party who is (or was), during that period, Registered in respect of the Metering Point.

52V.2 This Section 2G shall:

52V.2.1 only create rights and obligations between: (a) DNO/IDNO Parties (on the one hand) and the Crowded Meter Room Coordinator (on the other); and (b) Supplier Parties (on the one hand) and the Crowded Meter Room Coordinator (on the other);

52V.2.2 not create rights or obligations: (a) between DNO/IDNO Parties (on the one hand) and Supplier Parties (on the other); (b) between DNO/IDNO Parties and other DNO/IDNO Parties; or (c) between Supplier Parties and other Supplier Parties; and

52V.2.3 not apply to the OTSO Party, to SIP Parties, to CVA Registrants or to Gas Supplier Parties.

References in Relation to Companies and Electricity Suppliers

52V.3 In this Section 2G and in the terms defined in Clause 1 when used in this Section 2G, references to:

52V.3.1 an Entry Point or Exit Point are: (a) when made in relation to the Company, references to an Entry Point or Exit Point on the Company’s Distribution System; or (b) when made in relation to the Electricity Supplier and any period of time, references to an Entry Point or Exit Point relating to a Metering Point for which the Electricity Supplier is (or was) Registered during that period; and

52V.3.2 a Customer are to a Customer whose premises are connected to the Company's Distribution System and for which the Electricity Supplier is (or was) Registered.

Application Limited to Whole Current Metering

52V.4 This Section 2G shall only apply to Exit Points and/or Entry Points for which the import or export of electricity is metered directly by putting the full electrical current through the meter (known as 'whole current metering').

52W. PERMITTED WORKS

Requirements for those Undertaking Works

52W.1 Any and all Crowded Meter Room Works carried out pursuant to this Section 2G shall only be carried out with the permission of the Customer. This Section 2G does not imply any permission by the Customer, and the works pursuant to this Section 2G are not undertaken on behalf of the Company. The Crowded Meter Room Coordinator must make clear to each Customer (and to the occupier if different) that the Crowded Meter Room Coordinator is not acting on behalf of the Company.

Good Industry Practice

52W.2 The Crowded Meter Room Coordinator shall act in accordance with Good Industry Practice when carrying out, or procuring the carrying out of, any and all works pursuant to this Section 2G.

Meter Operation Code of Practice

52W.3 The Crowded Meter Room Coordinator shall only be entitled to exercise rights under this Section 2G via a contractor which is accredited for the purposes of the Meter Operation Code of Practice under the Retail Energy Code. The Crowded Meter Room Coordinator shall ensure that all of its contractors which undertake works pursuant to this Section 2G do so in compliance with the Meter Operation Code of Practice.

Works Undertaken by the Crowded Meter Room Coordinator

52W.4 If the Crowded Meter Room Coordinator wishes at any time to undertake Crowded Meter Room Works, then the Company and the Electricity Supplier hereby consent to the Crowded Meter Room Coordinator De-energising the Exit Point and/or Entry Point in order to do so (to the extent reasonably required in order to do so, and with no prior notice to the Company or the Supplier); provided that the Crowded Meter Room Coordinator Re-energises that Exit Point and/or Entry Point as soon as reasonably practicable thereafter.

52W.5 If the Crowded Meter Room Coordinator resolves to De-energise and/or Re-energise an Exit Point and/or Entry Point pursuant to Clause 52W.4, then the Crowded Meter Room Coordinator shall:

52W.5.1 (subject to Clauses 52W.2 and 52W.3) decide on the extent and nature of the De-energisation Works and Re-energisation Works, and shall undertake such De-energisation Works and Re-energisation Works at its own cost; and

52W.5.2 comply with the Relevant Instruments and the Distribution Code in relation to the De-energisation Works and Re-energisation Works.

52W.6 For the avoidance of doubt, the Crowded Meter Room Coordinator shall only be entitled to Re-energise an Exit Point and/or Entry Point that has been De-energised by (or on behalf of) the Crowded Meter Room Coordinator pursuant to this Section 2G.

Non-Interference

52W.7 The Company consents to the Crowded Meter Room Coordinator interfering with the Company's Distribution System to the extent it is necessary to do so in exercising the Crowded Meter Room Coordinator's rights, or

complying with its obligations, under this Section 2G. The Crowded Meter Room Coordinator shall not otherwise interfere with the Company's Distribution System.

52W.8 The Electricity Supplier consents to the Crowded Meter Room Coordinator interfering with the Electricity Supplier's metering equipment to the extent it is necessary to do so in exercising the Crowded Meter Room Coordinator's rights, or complying with its obligations, under this Section 2G. The Crowded Meter Room Coordinator shall not otherwise interfere with the Electricity Supplier's metering equipment.

52W.9 The Crowded Meter Room Coordinator shall indemnify the Company and the Electricity Supplier against all actions, proceedings, costs, demands, claims, expenses, liability, loss or damage arising directly from physical damage to the property of any person caused by the Crowded Meter Room Coordinator in exercising the Crowded Meter Room Coordinator's rights under this Clause 52W (but excluding liability for any loss of profit, loss of revenue, loss of use, loss of contract or loss of goodwill, and subject to a cap of £1 million per incident or series of related incidents).

52X. PROVISION OF INFORMATION TO THE COMPANY AND ELECTRICITY SUPPLIER

52X.1 The Crowded Meter Room Coordinator shall, in a prompt and appropriate manner having regard to the nature of the incident, inform the Electricity Supplier where the Crowded Meter Room Coordinator has reason to believe that:

52X.1.1 the flow of electricity through an Exit Point has been interrupted (and remains interrupted);

52X.1.2 there has been interference with any electricity metering equipment that has prevented such metering equipment from correctly registering the quantity of electricity supplied; and/or

52X.1.3 the electricity metering equipment otherwise presents a danger,

unless the Crowded Meter Room Coordinator believes that the Electricity Supplier has caused such circumstance to arise.

52X.3 For the purposes of giving notice under Clause 52X.1, the Crowded Meter Room Coordinator shall use its reasonable endeavours to establish the identity of the Electricity Supplier to whom notice should be given. Where the Crowded Meter Room Coordinator is unable to establish the identity of the person to whom notice should be given, it shall give such notice to the United Kingdom Revenue Protection Association.

52X.4 Where the Crowded Meter Room Coordinator becomes aware of any matter or incident that does or is likely to:

52X.4.1 cause danger or require urgent attention in relation to the supply or distribution of electricity through the Distribution System; or

52X.4.2 affect the maintenance of the security, availability and quality of service of the Distribution System,

then the Crowded Meter Room Coordinator shall notify the Company of such matter or incident in a prompt and appropriate manner having regard to the nature of the matter or incident (as further described in the remainder of this Clause 52X).

52X.5 Where the Crowded Meter Room Coordinator becomes aware of any matter or incident that does or is likely to cause danger or require urgent attention in relation to the supply or distribution of electricity through the

Distribution System (including a Category A Situation), then the Crowded Meter Room Coordinator shall ensure that the Company is notified of such matter or incident by telephone in a prompt and appropriate manner having regard to the nature of the matter or incident. The Crowded Meter Room Coordinator shall ensure that such notification identifies the relevant asset condition code as set out in Part 2 of Schedule 24.

52X.6 Where the Crowded Meter Room Coordinator becomes aware of any matter or incident that is a Category B Situation, then the Crowded Meter Room Coordinator shall ensure that the Company is notified of such matter or incident using the Data Transfer Network (data flow D0135) or by such other method as agreed by the Company, within 5 Working Days after becoming aware of such matter or incident. The Crowded Meter Room Coordinator shall ensure that such notification identifies the relevant asset condition code as set out in Part 2 of Schedule 24, and (where the Crowded Meter Room Coordinator has the Connectee's permission to do so) contact details for the Connectee.

52X.7 Where the Crowded Meter Room Coordinator becomes aware of any matter or incident that is a Category C Situation, then the Crowded Meter Room Coordinator shall ensure that the Company is notified of such report or enquiry using the Data Transfer Network (data flow D0135) or by such other method as agreed by the Company, within 10 Working Days after becoming aware of such matter or incident. The Crowded Meter Room Coordinator shall ensure that such notification identifies the relevant asset condition code as set out in Part 2 of Schedule 24.

52X.8 Upon request by the Company, the Crowded Meter Room Coordinator shall, in a prompt and appropriate manner, provide the Company with available information regarding the condition of any crowded meter room or cupboard at which the Crowded Meter Room Coordinator has carried out Crowded Meter Room Works.

52X.9 Upon request by the Crowded Meter Room Coordinator, the Company shall, in a prompt and appropriate manner, provide the Crowded Meter Room Coordinator with available information regarding the Premises (including details of ownership) where the Crowded Meter Room Coordinator is planning to carry out Crowded Meter Room Works.

SECTION 2.H - DISTRIBUTOR/SUPPLIER TO SIP PARTY RELATIONSHIPS

SCOPE OF SECTION 2H

This Section 2H sets out the terms and conditions pursuant to which each DNO/IDNO Party and each Supplier Party shall allow each SIP Party to undertake Safe Isolation Works.

52Y. INTERPRETATION OF SECTION 2H

Party Obligations

52Y.1 In this Section 2H and in the terms defined in Clause 1 when used in this Section 2H:

52Y.1.1 each reference to the "Company" is a reference to each Party that is either a DNO Party or an IDNO Party separately and individually and, where an obligation is imposed on, or a right granted to, the Company, that obligation is imposed on, and that right is granted to, each such Party separately and independently;

52Y.1.2 each reference to the "Electricity Supplier" is: (a) a reference to each Party that is a Supplier Party separately and individually and, where an obligation is imposed on, or a right granted to, the Electricity Supplier, that obligation is imposed on, and that right is granted to, each such Party separately and independently; and (b) when made in relation to a Metering Point and any period of time, a reference to the Supplier Party who is (or was), during that period, Registered in respect of the Metering Point; and

52Y.1.3 each reference to the "Safe Isolation Provider" is a reference to each Party that is a SIP Party separately and individually and, where an obligation is imposed on, or a right granted to, the Safe Isolation Provider, that obligation is imposed on, and that right is granted to, each such Party separately and independently.

52Y.2 This Section 2H shall:

52Y.2.1 only create rights and obligations between: (a) DNO/IDNO Parties (on the one hand) and SIP Parties (on the other); and (b) Supplier Parties (on the one hand) and SIP Parties (on the other);

52Y.2.2 not create rights or obligations: (a) between DNO/IDNO Parties (on the one hand) and Supplier Parties (on the other); (b) between DNO/IDNO Parties and other DNO/IDNO Parties; or (c) between Supplier Parties and other Supplier Parties; and

52Y.2.3 not apply to the OTSO Party, to the Crowded Meter Room Coordinator, to CVA Registrants or to Gas Supplier Parties.

References in Relation to Companies and Electricity Suppliers

52Y.3 In this Section 2H and in the terms defined in Clause 1 when used in this Section 2H, references to:

52Y.3.1 an Entry Point or Exit Point are: (a) when made in relation to the Company, references to an Entry Point or Exit Point on the Company’s Distribution System; or (b) when made in relation to the Electricity Supplier and any period of time, references to an Entry Point or Exit Point relating to a Metering Point for which the Electricity Supplier is (or was) Registered during that period; and

52Y.3.2 a Customer are to a Customer whose premises are connected to the Company's Distribution

System and for which the Electricity Supplier is (or was) Registered.

Application Limited to Whole Current Metering

52Y.4 This Section 2H shall only apply to Exit Points and/or Entry Points for which the import or export of electricity is metered directly by putting the full electrical current through the meter (known as 'whole current metering').

52Z. PERMITTED WORKS

Requirements for those Undertaking Works

52Z.1 Any and all Safe Isolation Works carried out pursuant to this Section 2H shall only be carried out by an individual working on behalf of the Safe Isolation Provider and with the permission of the Customer. This Section 2H does not imply any permission by the Customer, and the works pursuant to this Section 2H are not undertaken on behalf of the Company or the Electricity Supplier. The Safe Isolation Provider must make clear to the Customer (and to the occupier if different) that the Safe Isolation Provider is not acting on behalf of the Company or the Electricity Supplier.

Good Industry Practice

52Z.2 The Safe Isolation Provider shall act in accordance with Good Industry Practice when carrying out, or procuring the carrying out of, any and all works pursuant to this Section 2H.

Meter Operation Code of Practice

52Z.3 The Safe Isolation Provider shall only be entitled to exercise rights under this Section 2H while it is an accredited Meter Operator Agent for the purposes of the Meter Operation Code of Practice under the Retail Energy Code. The Safe Isolation Provider shall comply with the Meter Operation Code of Practice in relation to the works undertaken pursuant to this Section 2H.

Works Undertaken by the Safe Isolation Provider

52Z.4 If the Safe Isolation Provider wishes at any time to undertake Safe Isolation Works, then the Company and the Electricity Supplier hereby consent to the Safe Isolation Provider De-energising the Exit Point and/or Entry Point in order to do so (to the extent reasonably required in order to do so); provided that the Safe Isolation Provider Re-energises that Exit Point and/or Entry Point as soon as reasonably practicable thereafter.

52Z.5 If the Safe Isolation Provider resolves to De-energise and/or Re-energise an Exit Point and/or Entry Point pursuant to Clause 52Z.4, then the Safe Isolation Provider shall:

52Z.5.1 (subject to Clauses 52Z.2 and 52Z.3) decide on the extent and nature of the De-energisation Works and Re-energisation Works, and shall undertake such De- energisation Works and Re-energisation Works at its own cost; and

52Z.5.2 comply with the Relevant Instruments and the Distribution Code in relation to the De-energisation Works and Re-energisation Works.

52Z.6 For the avoidance of doubt, the Safe Isolation Provider shall only be entitled to Re-energise an Exit Point and/or Entry Point that has been De-energised by (or on behalf of) the Safe Isolation Provider pursuant to

this Section 2H.

Advance notice to the Company of Safe Isolation Works

52Z.7 The Safe Isolation Provider shall give the Company at least one (1) Working Day's advance notification of the day on which the Safe Isolation Provider is to undertake Safe Isolation Works at a premises.

52Z.8 Regarding the notification required by Clause 52Z.7:

52Z.8 .1 if the Company (in conjunction with other distributors, potentially via the Energy Networks Association) has made an app available for the purposes of making such notification, then the Safe Isolation Provider shall use that app; or

52Z.8.2 if no such app has been made available, but the REC has been modified so that there is a Market Message for the purposes of making such notification, then the Safe Isolation Provider shall use that Market Message; or

52Z.8.3 if neither of the two option above applies, then the Safe Isolation Provider shall not be required to provide such notification.

Non-Interference

52Z.9 The Company consents to the Safe Isolation Provider interfering with the Company's Distribution System to the extent it is necessary to do so in exercising the Safe Isolation Provider's rights, or complying with its obligations, under this Section 2H. The Safe Isolation Provider shall not otherwise interfere with the Company's Distribution System.

52Z.10 The Electricity Supplier consents to the Safe Isolation Provider interfering with the Electricity Supplier's metering equipment to the extent it is necessary to do so in exercising the Safe Isolation Provider's rights, or complying with its obligations, under this Section 2H. The Safe Isolation Provider shall not otherwise interfere with the Electricity Supplier's metering equipment.

52Z.11 The Safe Isolation Provider shall indemnify the Company and the Electricity Supplier against all actions, proceedings, costs, demands, claims, expenses, liability, loss or damage arising directly from physical damage to the property of any person caused by the Safe Isolation Provider in exercising the Safe Isolation Provider’s rights under this Clause 52Z (but excluding liability for any loss of profit, loss of revenue, loss of use, loss of contract or loss of goodwill, and subject to a cap of £1 million per incident or series of related incidents).

52AA. PROVISION OF INFORMATION TO THE COMPANY AND ELECTRICITY SUPPLIER

52AA.1 The Safe Isolation Provider shall, in a prompt and appropriate manner having regard to the nature of the incident, inform the Electricity Supplier where the Safe Isolation Provider has reason to believe that:

52AA.1.1 the flow of electricity through an Exit Point has been interrupted (and remains interrupted);

52AA.1.2 there has been interference with any electricity metering equipment that has prevented such metering equipment from correctly registering the quantity of electricity supplied; and/or

52AA.1.3 the electricity metering equipment otherwise presents a danger,

unless the Safe Isolation Provider believes that the Electricity Supplier has caused such circumstance to arise.

52AA.2 For the purposes of giving notice under Clause 52AA.1, the Safe Isolation Provider shall use its reasonable endeavours to establish the identity of the Electricity Supplier to whom notice should be given. Where the Safe Isolation Provider is unable to establish the identity of the person to whom notice should be given, it shall give such notice to the United Kingdom Revenue Protection Association.

52AA.3 Where the Safe Isolation Provider becomes aware of any matter or incident that does or is likely to:

52AA.3.1 cause danger or require urgent attention in relation to the supply or distribution of electricity through the Distribution System; or

52AA.3.2 affect the maintenance of the security, availability and quality of service of the Distribution System,

then the Safe Isolation Provider shall notify the Company of such matter or incident in a prompt and appropriate manner having regard to the nature of the matter or incident (as further described in the remainder of this Clause 52AA).

52AA.4 Where the Safe Isolation Provider becomes aware of any matter or incident that does or is likely to cause danger or require urgent attention in relation to the supply or distribution of electricity through the Distribution System (including a Category A Situation), then the Safe Isolation Provider shall ensure that the Company is notified of such report or enquiry by telephone in a prompt and appropriate manner having regard to the nature of the matter or incident. The Safe Isolation Provider shall ensure that such notification identifies the relevant asset condition code as set out in Part 2 of Schedule 24.

52AA.5 Where the Safe Isolation Provider becomes aware of any matter or incident that is a Category B Situation, then the Safe Isolation Provider shall ensure that the Company is notified of such matter or incident using the Data Transfer Network (data flow D0135), within 5 Working Days after becoming aware of such matter or incident. The Safe Isolation Provider shall ensure that such notification identifies the relevant asset condition code as set out in Part 2 of Schedule 24, and (where the Safe Isolation Provider has the Connectee's permission to do so) contact details for the Connectee.

52AA.6 Where the Safe Isolation Provider becomes aware of any matter or incident that is a Category C Situation, then the Safe Isolation Provider shall ensure that the Company is notified of such report or enquiry using the Data Transfer Network (data flow D0135) within 10 Working Days after becoming aware of such matter or incident. The Safe Isolation Provider shall ensure that such notification identifies the relevant asset condition code as set out in Part 2 of Schedule 24.

SECTION 3: GENERAL LEGAL PROVISIONS

53. LIMITATION OF LIABILITY

Physical Damage

53.1 Subject to Clause 53.5 and save as provided in this Clause 53.1 and Clause 53.2, and save where any provision of this Agreement provides for an indemnity, no Party (the **Party Liable**) nor any of its officers, employees or agents shall be liable to any other Party for loss arising from any breach of this Agreement other than for loss directly resulting from such breach and which at the date hereof was reasonably foreseeable as not unlikely to occur in the ordinary course of events from such breach in respect of:

53.1.1 physical damage to the property of that other Party, its officers, employees or agents; and/or

53.1.2 the liability of that other Party to any other person for loss in respect of physical damage to the property of any person,

provided that the liability of the Party Liable in respect of all claims for such loss shall in no circumstances exceed £1 million (or, in relation to Bilateral Connection Agreements under Section 2B, such higher figure as the two Parties thereto may agree in such Bilateral Connection Agreement) per incident or series of related incidents, and provided further that the Party Liable shall be entitled:

53.1.3 to deduct from any sums payable to another Party in respect of the Party Liable's liability for loss or damage in respect of any event under this Agreement any sums which it is liable to pay to a person who has a connection to the Party Liable's System or any other person (whether or not a Party) in respect of the same loss or damage in respect of the same event; and

53.1.4 where it has already made payment in respect of its liability for loss or damage in respect of an event under this Agreement, at the time at which it becomes liable to pay any other person (whether or not a Party) in respect of the loss or damage in respect of the same event, to reclaim from the Party to whom it made a payment under this Agreement the amount of its liability to that other person but not exceeding the amount already paid to that Party in respect of loss or damage in respect of the same event,

provided that where any Party Liable becomes aware of any claim, difference, dispute or proceedings (actual or threatened) which it reasonably expects may lead to a liability to a person other than another Party in respect of an event which may also give rise to a liability to another Party under this Agreement, then the Party Liable shall consult with the other Party as to the conduct of that claim, difference, or dispute or those proceedings (actual or threatened).

Death or Personal Injury

53.2 Nothing in this Agreement shall exclude or limit the liability of any Party Liable for death or personal injury resulting from the negligence of the Party Liable or any of its officers, employees or agents, and the Party Liable shall indemnify and keep indemnified the other Parties and their officers, employees and agents, from and against all such liability and any loss or liability which such other Parties may suffer or incur by reason of any claim on account of death or personal injury resulting from the negligence of the Party Liable or any of its officers, employees or agents.

Economic and Consequential Loss

53.3 Subject to Clause 53.5, and save where any provision of this Agreement provides for an indemnity, neither the Party Liable, nor any of its officers, employees or agents, shall in any circumstances whatsoever be

liable, under or in relation to this Agreement, to another Party for:

53.3.1 any loss of profit, loss of revenue, loss of use, loss of contract or loss of goodwill; or

53.3.2 any indirect or consequential loss; or

53.3.3 loss resulting from the liability of such other Party to any other person howsoever and whenever arising save as provided in Clauses 53.1 and 53.2.

Exclusive Remedies

53.4 The rights and remedies provided by this Agreement to the Parties are exclusive and not cumulative and exclude and are in place of all substantive (but not procedural) rights or remedies express or implied and provided by common law or statute in respect of the subject matter of this Agreement, including any rights any Party may possess in tort (or delict) which shall include actions brought in negligence and/or nuisance. Accordingly, each of the Parties hereby waives to the fullest extent possible all such rights and remedies provided by common law or statute, and releases the Party Liable, its officers, employees and agents to the same extent from, all duties, liabilities, responsibilities or obligations provided by common law or statute in respect of the matters dealt with in this Agreement and undertakes not to enforce any of the same except as expressly provided herein.

Overriding Nature of this Clause

53.5 Save as otherwise expressly provided in this Agreement, this Clause 53 insofar as it excludes or limits liability shall override any other provision in this Agreement, provided that nothing in this Clause 53 shall exclude or restrict or otherwise prejudice or affect any of:

53.5.1 the rights, powers, duties and obligations of any Party which are conferred or created by the Act, any licence granted pursuant to the Act, or any subordinate legislation made under the Act; or

53.5.2 the rights, powers, duties and obligations of the Authority or the Secretary of State under the Act, any such licence or otherwise howsoever.

Other Matters

53.6 Each of the sub-clauses of this Clause 53:

53.6.1 shall be construed as a separate and severable contract term, and if one or more of such sub-clauses is held to be invalid, unlawful or otherwise unenforceable, then the other or others of such sub-clauses shall remain in full force and effect and shall continue to bind the Parties; and

53.6.2 shall survive the termination or expiry of this Agreement.

53.7 Each Party hereby acknowledges and agrees that each other Party holds the benefit of Clauses 53.1, 53.2 and 53.3 for itself and as trustee and agent for its officers, employees and agents.

53.8 Each Party hereby acknowledges and agrees that the provisions of this Clause 53 have been the subject of discussion and negotiation and are fair and reasonable having regard to the circumstances as at the date hereof.

53.9 Nothing in this Clause 53 shall prevent or restrict any Party from enforcing any payment obligation (including suing for a debt) owed to it under or pursuant to this Agreement, or prevent DCUSA Ltd from enforcing any

payment obligation (including suing for debts owed under Clause 8) owed to the Panel.

Offshore Transmission Systems

53.10 The following provisions apply only in relation to arrangements pursuant to Section 2B and between the OTSO Party and a DNO/IDNO Party in respect of an Offshore Transmission System owned by an Offshore Transmission Owner:

53.10.1 in consideration of the rights conferred upon the DNO/IDNO Party under this Agreement, the right of the DNO/IDNO Party to claim in negligence, other tort, or otherwise howsoever against the Offshore Transmission Owner in respect of any act or omission of the Offshore Transmission Owner in relation to the subject matter of the STC is hereby excluded and the DNO/IDNO Party agrees not to pursue any such claim; save that nothing in this Clause 53.10 shall restrict the ability of the DNO/IDNO Party to claim in respect of:

A. any contract to which the DNO/IDNO Party and the Offshore Transmission Owner are (from time to time) party;

B. fraudulent misrepresentation; or

C. death or personal injury resulting from the negligence of the Offshore Transmission Owner; and

53.10.2 the OTSO Party shall ensure that the STC contains a waiver from the Offshore Transmission Owner in favour of (and enforceable by) the DNO/IDNO Party in respect of any claim the Offshore Transmission Owner may have in negligence, other tort, or otherwise howsoever against the DNO/IDNO Party in respect of any act or omission of the DNO/IDNO Party in relation to the subject matter of Section 2B, and the OTSO Party shall ensure that such waiver includes an agreement on the part of the Offshore Transmission Owner not to pursue such a claim: save that the waiver need not apply to claims in respect of:

A. any contract to which the DNO/IDNO Party and the Offshore Transmission Owner are (from time to time) party;

B. fraudulent misrepresentation; or

C. death or personal injury resulting from the negligence of the DNO/IDNO Party.

54. TERMINATION

Events of Default

54.1 It shall be an **Event of Default** in respect of a Party (the **Breaching Party**) if:

54.1.1 the Breaching Party is in material breach of any of its material obligations under this Agreement and, if the breach is or was capable of remedy, the Breaching Party has failed to remedy the breach within 20 Working Days of receipt of a notice from any Party to whom that obligation was owed giving full details of the breach, requiring the Breaching Party to remedy the breach, and stating that a failure to remedy the breach may give rise to the consequences set out in this Clause 54;

54.1.2 the Breaching Party passes a resolution for its own winding-up, dissolution, administration or reorganisation (except for the purposes of a solvent reconstruction or reorganisation approved by the Panel), or a court of competent jurisdiction makes an order for the winding-up or dissolution of the Breaching Party;

54.1.3 the Breaching Party has an administrator appointed in respect of it, or an administration order is made in relation to it, or a receiver, administrative receiver, trustee, liquidator, compulsory manager or other similar officer is appointed in respect of the Breaching Party or the whole or a substantial part of its assets, or an encumbrancer takes possession of or sells the whole or a substantial part of the Breaching Party's assets, rights, or revenues;

54.1.4 the Breaching Party makes an arrangement, compromise, composition, assignment or assignation with its creditors generally or makes an application to a court for protection from its creditors generally;

54.1.5 the Breaching Party is unable to pay its debts within the meaning of Section 123 of the Insolvency Act 1986, but as if in that section the sum of £10,000 was substituted for the sum of £750;

54.1.6 without prejudice to Clause 55, a circumstance of Force Majeure that affects the performance by the Breaching Party of substantially all of its obligations under this Agreement continues for more than 180 days and any Party to whom any such obligation was owed serves a notice on the Breaching Party referring to this Clause 54;

54.1.7 any of the conditions precedent relating to the Breaching Party set out in Clauses 16.1.2 to 16.1.7 (inclusive) or in Clauses 37.1.1 to 37.1.5 (inclusive) cease to be satisfied in respect of the Breaching Party;

54.1.8 the Breaching Party fails to remedy a DCUSA Payment Default within 5 Working Days after receipt of a DCUSA Late Payment Notice.

Suspension of Rights

54.2 For so long as an Event of Default is continuing, where a Supplier/CVA Registrant is a User under Section 2A, or where a DNO/IDNO/OTSO Party is a User under Section 2B, and, in either case, that Party is a Breaching Party pursuant to:

54.2.1 Clause 54.1.1 or 54.1.6, any Party to whom the obligations in question were owed shall be entitled to suspend its performance of the services described in Section 2 to the Breaching Party by: (a)

giving notice in writing to the Breaching Party; and (b) copying that notice to the Authority and the Panel (care of the Secretariat);

54.2.2 Clause 54.1.8, the Panel shall be entitled to instruct the REC Code Manager to procure suspension of CSS registration services for the Breaching Party by imposing a Market Sanction under the 'Switching Data Management Schedule' of the Retail Energy Code and shall notify each DNO/IDNO Party and the Authority that the Panel has taken such action; and

54.2.3 any provision of Clause 54.1 other than Clauses 54.1.1, 54.1.6 and 54.1.8, any Party shall be entitled to suspend its performance of the services described in Section 2 to the Breaching Party by: (a) giving notice in writing to the Breaching Party; and (b) copying that notice to the Authority and the Panel (care of the Secretariat).

54.2A In the case of suspension under Clauses 54.2.1 or 54.2.3:

54.2A.1 where the Breaching Party's rights under Section 2A are suspended, then the suspending Party shall prevent new registrations in its MPAS by the Breaching Party, and shall notify an end to the Regulatory Alliance with the Breaching Party under the 'Switching Data Management Schedule' of the Retail Energy Code; and

54.2A.2 the Breaching Party shall pay to the suspending Party an amount equal to any reasonable costs incurred by such Party as a result of such suspension.

54.3 Where an Event of Default is continuing, the Panel may resolve that the Breaching Party in question shall not, for such period as the Panel may specify, be entitled to exercise its election and voting rights under Section 1, in which case the provisions of Clause 6 and Section 1C shall operate (during that period) as if that Party were not a Party. The Panel shall notify the Authority and all the Parties of any such resolution.

54.4 Any Party whose rights are restricted in accordance with Clause 54.3 may apply to the Panel to have those restrictions removed. The Panel shall consider such application and may levy a fee on the relevant Party for doing so. Where the Panel considers that no Event of Default is continuing in respect of the applicant, it shall notify the Parties and the Authority accordingly, and the restrictions imposed under Clause 54.3 shall cease to apply.

Ending of Suspension

54.4A Where the Panel has instructed the REC Code Manager to procure suspension of CSS registration services for a Party in accordance with Clause 54.2.2 and that Party remedies the DCUSA Payment Default, then the Panel shall notify each DNO/IDNO Party and the Authority that the DCUSA Payment Default has been remedied, and shall instruct the REC Code Manager to cease the suspension of CSS registration services by ending the Market Sanction under the Retail Energy Code.

54.4B Where a Party has suspended its performance of the services under Section 2 to a Breaching Party in accordance with Clause 54.2 and where the Breaching Party remedies the relevant Event of Default, then the suspending Party shall end such suspension by: (a) giving notice in writing to the Breaching Party; and (b) copying that notice to the Authority and the Panel (care of the Secretariat). Where suspension of new registrations in MPAS is ended, the suspending Party shall notify the reestablishment of the Regulatory Alliance with the Breaching Party under the 'Switching Data Management Schedule' of the Retail Energy Code.

Ceasing to be a Party

54.5 Subject to Clause 54.6:

54.5.1 where a Party applies to the Panel to be removed as a Party; or

54.5.2 where an Event of Default occurs in respect of a Party, and is continuing, and has been continuing for at least six months,

the Panel may resolve to terminate that Party's accession to this Agreement. On written notice by the Panel of such resolution to the Parties and the Authority, the Party in question shall cease to be a Party.

54.6 A Party's accession to this Agreement may not be terminated:

54.6.1 in the case of a DNO Party or an IDNO Party, where that Party holds a Distribution Licence which requires it to be a party to this Agreement;

54.6.2 in the case of a Supplier Party, where that Party holds a Supply Licence which requires it to be a party to this Agreement.

Panel Member Conflict

54.7 A Panel Member shall be disqualified from acting, and shall not act in their capacity as a Panel Member, in relation to a resolution pursuant to this Clause 54 and a Breaching Party where that Panel Member's employer is that Breaching Party or an Affiliate of that Breaching Party. Any Alternate of such Panel Member shall act in that Panel Member's place (unless that Alternate is also employed by that Breaching Party or an Affiliate of that Breaching Party)

Consequences of Termination

54.8 Except where expressly stated to the contrary, the rights and obligations of a Party under this Agreement shall cease immediately upon that Party's accession to this Agreement being terminated and it ceasing to be a Party. However, such termination shall not affect any rights and obligations which have accrued on or before the date of such termination.

54.9 Clauses 1, 8 (only in respect of those Financial Years, and parts thereof, during which it was a Party), 15, 19 to 25 (inclusive), 32, 34, 35, 36, 41, 43 to 47 (inclusive), 50, 51, 53, 54.8 and 54.9 shall survive the termination of such accession and continue to apply to a Party after it ceases to be a Party.

55. FORCE MAJEURE

55.1 If any Party (the **Affected Party**) is unable to carry out any of its obligations under this Agreement due to any circumstance of Force Majeure, this Agreement shall (subject to Clause 54.1.6) remain in effect but:

55.1.1 the Affected Party's obligations;

55.1.2 the obligations any other Party owes to the Affected Party under this Agreement; and

55.1.3 any obligations such other Parties owe between themselves under this Agreement which the relevant Party is unable to carry out directly as a result of the suspension of the Affected Party's obligations in accordance with this Clause 55,

shall be suspended without liability for the period during which the circumstance of Force Majeure prevails provided that:

55.1.4 the Affected Party gives the other Parties prompt notice describing the circumstance of Force Majeure including the nature of the occurrence and its expected duration and, where reasonably practicable, continues to furnish regular reports with respect thereto during the period of Force Majeure; and

55.1.5 the suspension of performance is of no greater scope and of no longer duration than is required by the circumstance of Force Majeure; and

55.1.6 no obligations of any Party that arose before the circumstance of Force Majeure causing the suspension of performance are excused as a result of the Force Majeure; and

55.1.7 the Affected Party uses all reasonable efforts to mitigate the impact of the circumstance of Force Majeure and to remedy its inability to perform as quickly as possible; and

55.1.8 immediately after the end of the circumstance of Force Majeure, the Affected Party notifies the other Parties in writing that the circumstance of Force Majeure has ended and resumes performance of its obligations under this Agreement.

56. DEROGATIONS

Panel's Ability to Grant Derogations (excluding Sandbox Applications)

56.1 The Panel may (subject to Clause 56.3) resolve, on the application of any Party, to grant a derogation to any Party or Parties in relation to any obligation or obligations contained in this Agreement. In resolving to grant such derogation, the Panel may impose such conditions as it sees fit, and shall specify the term, scope and application of such derogation. Derogations, save for derogations requested under Sandbox Applications, will normally only be granted in respect of newly introduced or amended obligations (or obligations due to be implemented in the future).

56.2 The Panel may, from time to time and as it sees fit (subject to Clause 56.3), resolve to retract any derogation, or to amend or add to the conditions applicable to any derogation.

56.3 A derogation granted to any Party by the Panel under Clause 56.1, or any retraction, amendment or addition under Clause 56.2, shall, in each case, only be effective if made in conformity with any representations received from the Authority in accordance with Clause 56.5.3 and if not vetoed by the Authority within 10 Working Days of notification of the Panel's decision and the rationale for it.

Application for Derogation

56.4 A Party may, at any time, apply to the Panel for a derogation under Clause 56.1 by notice in writing to the Panel Secretary.

56.5 Where the Panel Secretary receives such an application, it shall ensure that the matter is added to the agenda for the next Panel meeting occurring more than 10 Working Days after receipt of such application, and shall give notice to all the Parties and to the Authority, at least 10 Working Days before the Panel meeting in question:

56.5.1 setting out the identity of the Party by whom the application has been made and the terms of the derogation sought;

56.5.2 specifying the date on which the Panel is due to consider the matter; and

56.5.3 inviting representations or objections with respect to the derogation before that time.

56.6 Where representations or objections are made in accordance with Clause 56.5.3, the Panel Secretary shall, as soon as reasonably practicable after receipt thereof and unless such representations or objections have been marked as confidential, publish those representations or objections on the Website.

Licence Derogations

56.7 Without prejudice to Clause 56.1, where the Authority grants a derogation to a Party under its Licence relieving that Party of certain of its licence obligations (including any derogation in respect of one or more of the Charging Methodologies or any element of them), that derogation shall also be effective for the purposes of this Agreement in the same terms (to the extent relevant to this agreement). The Party seeking to rely upon such derogation shall, as soon as reasonably practicable after receipt of such derogation send a copy of it to the Panel.

Derogation from Performance

56.8 For so long as a Party has the benefit of a derogation in accordance with Clause 56.1 or 56.7, that Party shall be excused from complying with the obligations specified in the terms of that derogation, and shall be deemed not to be in breach of this Agreement for failing to comply with the relevant obligations for the term of the derogation, but shall be required to comply with any modified obligations which are specified as a condition of the derogation.

56.9 A Party may, immediately by notice in writing to the Panel at any time, reject any derogation then applying to it, in which case the derogation shall cease to apply for the purposes of this Agreement and the Party shall become subject to the obligations under this Agreement set out in the derogation in question.

Sandbox Applications

56.10 Where the Secretariat receives an enquiry from a potential Sandbox Applicant requesting guidance about their project, the Secretariat shall:

56.10.1 provide reasonable assistance and guidance to the potential applicant, including an initial assessment of the project's likely eligibility for sandbox support (by reference to the Authority's published criteria from time to time); and

56.10.2 notify the Authority of the details of the enquiry and whether, in the Secretariat's view, a Sandbox Application will be made.

56.11 The Secretariat shall, in respect of any Sandbox Application received from the Authority, add it to the Sandbox Register and prepare a written report (the **"Sandbox Application Assessment Form"**) containing the information listed at Clause 56.13.

56.12 The Secretariat shall not be required to conduct an evaluation of a Sandbox Application or submit a draft Sandbox Application Assessment Form to the Authority, until the Sandbox Applicant has:

56.12.1 provided all the information that the Secretariat reasonably requires in order to conduct such evaluation and prepare a Sandbox Application Assessment Form; and

56.12.2 paid to the Secretariat a fee which represents the reasonable costs to the Secretariat of processing the Sandbox Application, such fee to be approved by the Panel from time to time.

56.13 The Sandbox Application Assessment Form shall:

56.13.1 be addressed and delivered to the Authority and copied to the Panel;

56.13.2 specify the identity of the Sandbox Applicant;

56.13.3 specify the Party/Parties seeking the derogation (if not the Sandbox Applicant);

56.13.4 set out the reason for the derogation;

56.13.5 set out the derogation required to this Agreement;

56.13.6 identify any impact on Parties including applicable costs (if any);

56.13.7 state the period of the requested derogation, the end of which shall be no longer than two years from the Authority's approval of such derogation;

56.13.8 state the reason(s) why the derogation better facilitates the DCUSA Objectives;

56.13.9 set out a reporting plan; and

56.13.10 make a recommendation as to whether the Secretariat considers the Authority should accept or reject the Sandbox Application

56.14 Following receipt of a Sandbox Pre-Approval, the Panel shall ensure that:

56.14.1 the Sandbox Application Assessment Form and the Sandbox Pre-Approval are provided to Parties, within 2 Working Days, by the Panel Secretary; and

56.14.2 Parties are invited to submit representations with respect to the Sandbox Application within the period ending 10 Working Days after receipt of the Sandbox Application Assessment Form and Sandbox Pre-Approval.

56.15 Where representations or objections are made in accordance with Clause 56.14.2, the Secretariat shall, as soon as reasonably practicable after receipt thereof, and unless such representations or objections have been marked as confidential, publish those representations or objections on the Website.

56.16 Following the end of the period referred to in Clause 56.14.2, the Panel shall make its recommendation to the Authority as to whether the Panel considers the Authority should accept or reject the Sandbox Application. The Panel shall consider any representations or objections received from the Parties and the Authority, and may make any amendment or apply any conditions to the derogation request, in making such recommendation.

56.17 Where Clause 56.16 applies, the Secretariat shall provide the Authority with:

56.17.1 the Sandbox Application Assessment Form;

56.17.2 the Panel's recommendation;

56.17.3 any applicable amendments or conditions to apply to the Sandbox Application;

56.17.4 any representations or objections received from Parties; and

56.17.5 at the Authority's request, any other existing documents or information in respect of the Sandbox Application in question.

56.18 In making a determination in respect of a Sandbox Application, the Authority;

56.18.1 may follow such procedure as it considers appropriate;

56.18.2 may have regard to such matters, and to any representations by such Parties, as it considers appropriate; and

56.18.3 shall, in any event, have regard to the recommendation made by the Panel.

56.19 Where the Authority determines that a Sandbox Application shall be accepted or rejected, it shall direct the Panel accordingly. Any direction will be effectively given if communicated by the Authority to the Panel (which may be care of the Secretariat).

56.20 The Secretariat shall, as soon as is reasonably practicable after receipt of the direction by the Authority as referred to in Clause 56.19, notify the Sandbox Applicant and shall ensure that the Sandbox Register is updated so as to indicate the decision made in relation to the Sandbox Application.

56.21 The Panel may, from time to time and as it sees fit, resolve to retract any derogation, or to amend or add to the conditions applicable to any Sandbox Application subject to seeking representations from Parties and approval from the Authority.

57. FURTHER INFORMATION PROVISIONS

Confidentiality and the Panel

57.1 The Parties acknowledge that, in order for the Panel (and its Working Groups) to properly carry out its duties under this Agreement, the Panel may decide, or be obliged, to keep confidential to it (and may instruct its Working Groups to keep confidential) matters, minutes, reports, consultation responses, data and other information produced by or for, or made available to, the Panel, the Secretariat, the Panel Secretary or any Working Group. In such cases, the Panel, the Panel Members, the Secretariat, the Panel Secretary and any Working Group and its members shall not disclose such matters, minutes, reports, consultation responses, data and other information. The Panel shall use reasonable endeavours to keep such cases to a minimum.

57.2 Each Party agrees, subject to any relevant confidentiality provision binding on it, to provide the Panel, the Panel Secretary and the Secretariat with all data and other information reasonably requested by the Panel and necessary for the Panel, the Panel Secretary and/or the Secretariat properly to carry out their duties and responsibilities under this Agreement.

57.3 The following provisions apply in relation to information provided by a Party (under or in relation to this Agreement) to one or more of the Panel, DCUSA Ltd, any Working Group, the Panel Secretary and/or the Secretariat (including any information that a Party provides under Clause 57.2):

57.3.1 where the Party wishes such information to remain confidential, it shall clearly mark such information as such. The Panel, its Working Groups and the Secretariat shall ensure that all information so marked is kept secret and confidential, provided that such information shall still be made available to the Authority on the understanding that the Authority shall keep such information confidential: or

57.3.2 where the Party does not mark any such information as confidential, the Panel, its Working Groups and the Secretariat need not treat such information as secret or confidential, and the Party hereby consents to the publication of such information on the Website (provided the requirements of Schedule 14 are observed). The Party providing such information shall indemnify DCUSA Ltd in respect of any claim relating to the publication of such information on the Website in accordance with Schedule 14 (whether under the Data Protection Legislation, section 105 of the Utilities Act or otherwise).

Intellectual Property in Change Proposals

57.4 In respect of each Change Proposal that a Proposer may make, the Proposer hereby:

57.4.1 assigns fully, irrevocably and unconditionally any and all present and future Intellectual Property Rights that it may have in such Change Proposal to DCUSA Ltd; and

57.4.2 confirms that, to the best of its knowledge and belief, no other person has any Intellectual Property Rights in such Change Proposal.

Party Details

57.5 On each Party's accession to this Agreement, the Secretariat shall add that Party's Party Details to Schedule 11.

57.6 Each Party shall ensure that the Secretariat is notified of any changes from time to time in that Party's Party Details, so as to ensure that the same can be kept up-to-date from time to time.

57.7 Subject to Clause 57.10, the Secretariat shall, on receipt of any notification under Clause 57.6, promptly:

57.7.1 amend Schedule 11 to reflect the relevant changes in the relevant Party's Party Details; and

57.7.2 make a copy of the amended Schedule 11 available via the Website.

57.8 A Party can only add a Party Category to its existing accession if that Party would be eligible to be admitted as a Party in that Party Category under Clause 4 (but disregarding for these purposes Clause 4.2.1).

57.9 Where a Party applies to the Secretariat to add an additional Party Category, DCUSA Ltd shall (subject to Clause 57.8) enter into an agreement with such Party to record such addition (in such form as the Panel may approve from time to time). Each Party hereby irrevocably and unconditionally authorises DCUSA Ltd to execute and deliver, on behalf of such Party, any such agreement.

57.10 A Party's additional Party Category shall be effective from the effective date set out in the relevant agreement under Clause 57.9, and the Secretariat shall update Schedule 11 with effect from that date.

57.11 Any disputes regarding the ability of a Party to add a Party Category shall be subject to Clause 4.9, on the same basis as if the dispute concerned admission as a Party.

57.12 Notwithstanding Clauses 1C and 10.1, any changes to Schedule 11 in accordance with Clause 57.5 or 57.7 shall not constitute a change to which Section 1C applies.

58. DISPUTES

Arbitration

58.1 Save where expressly stated in this Agreement to the contrary, and subject to:

58.1.1 any contrary provisions of the Act, of any licence issued pursuant to the Act, or of the Regulations (or any other regulations made under Section 29 of the Act); and

58.1.2 the rights, powers, duties and obligations of the Authority or the Secretary of State under the Act, or under any such licence, or otherwise howsoever,

any dispute or difference of whatever nature howsoever arising under, out of, or in connection with this Agreement between two or more Parties shall be and is hereby referred to arbitration between such Parties, pursuant to the arbitration rules of the Electricity Arbitration Association from time to time in force.

58.2 Whatever the nationality, residence, or domicile of the Parties in question and wherever the dispute or difference or any part thereof arose, the law of England shall be the proper law of any reference to arbitration hereunder and in particular (but not so as to derogate from the generality of the foregoing) the seat of any such arbitration shall be Great Britain and the provisions of the Arbitration Act 1996 shall apply to any such arbitration wherever the same or any part of it shall be conducted.

Third Party Claims

58.3 Subject always to Clause 58.5, if any consumer of electricity (the **consumer**) brings any legal proceedings in any court against any Party (the **defendant party**) and the defendant party wishes to make a third party claim (as defined in Clause 58.4) against another Party which would but for this Clause 58.3 have been a dispute or difference referred to arbitration by virtue of Clause 58.1, then, notwithstanding the provisions of Clause 58.1 (which shall not apply) and in lieu of arbitration, the court in which the legal proceedings have been commenced shall hear and completely determine and adjudicate upon the legal proceedings and the third party claim not only between the consumer and the defendant party but also between either or both of them and the other such Party, whether by way of third party proceedings or otherwise as may be ordered by the court.

58.4 For the purposes of this Clause 58, **third party claim** shall mean:

58.4.1 any claim by a defendant party against another Party (whether or not already a party to the legal proceedings) for any contribution or indemnity; or

58.4.2 any claim by a defendant party against another Party for any relief or remedy relating to or connected with the subject matter of the legal proceedings and substantially the same as some relief or remedy claimed by the consumer; or

58.4.3 any requirement by a defendant party that any question or issue relating to or connected with the subject matter of the legal proceedings should be determined not only as between the consumer and the defendant party but also as between either or both of them and another Party (whether or not already a party to the legal proceedings).

58.5 Clause 58.3 shall apply only if, at the time at which the legal proceedings are commenced, no arbitration has been commenced between the defendant party and the other Party in question that raises or involves the same or substantially the same issues as would be raised by or involved in the third party claim. The tribunal

in any arbitration which has been commenced prior to the commencement of legal proceedings shall determine the question, in the event of dispute, whether the issues raised or involved are the same or substantially the same.

59. DATA TRANSFER AND NOTICES

Data Transfer

59.1 Unless otherwise agreed between the sender and the recipient, any notice, request or other communication under Section 2 shall be sent in accordance with Good Industry Practice, and Good Industry Practice will include sending it by the means (if any), and, with the content (if any), required pursuant to:

59.1.1 the Balancing and Settlement Code;

59.1.2 the Retail Energy Code; and/or

59.1.3 the Energy Market Data Specification.

59.2 Where this Agreement requires any notice, request or other communication to be sent via the Data Transfer Network or the DIP, the relevant message shall be addressed to the Market Domain I.D. or (for MHHS) to the DIP ID, specified for such purpose in that Party's Party Details.

Data Transfer Responsibility

59.3 Where this Agreement requires any notice, request or other communication to be sent via the Data Transfer Network or the DIP, the Party sending the relevant message shall be responsible for ensuring that it is sent within any time period laid down in this Agreement for the provision of such notice, request or communication; provided that the Party sending a message shall have no obligation to ensure receipt where the intended recipient has failed to remove or process all messages delivered to it and to ensure that such messages are made available to its internal systems as expeditiously as possible.

Unavailability of DTN or the DIP

59.4 If the Data Transfer Network or any relevant part of such network or the DIP is at any time for any reason unavailable for the sending of messages between the Parties, then during the period of unavailability:

59.4.1 the Parties shall use any means reasonable in the circumstances to send any notice, request or other communication that this Agreement would otherwise require to be sent via the Data Transfer Network;

59.4.2 where other means are used in accordance with Clause 59.4.1, the Parties shall be relieved from any service levels set out in this Agreement relating to any affected notice, request or other communication (except to the extent that this Agreement expressly provides for alternative service levels in such circumstances) but shall use their reasonable endeavours to send such notice, request or other communication as soon as is reasonably practicable; and

59.4.3 to the extent that no such other means are practicable given the nature of the communication and the surrounding circumstances, such unavailability of the Data Transfer Network or the DIP shall be deemed (to the extent not caused by a breach by either party of the Data Transfer Service Agreement or the DIP Supplement) to constitute a circumstance of Force Majeure for the purposes of this Agreement.

59.5 Where any Party, in breach of its obligations under Clause 59.3, fails to deliver any notice, request or other communication to the recipient and such failure occurs for reasons outside that Party’s direct control, the

breaching Party shall have no liability to the other under this Agreement and the relevant Parties shall rely instead upon the provisions of the Data Transfer Service Agreement or the DIP Supplement.

Notices

59.6 Save as provided in Clause 30.5, Clause 59.1 and Schedule 8, any notice, request or other communication to be made by one Party to another Party under or in connection with this Agreement shall be in writing and shall be delivered personally or sent by first class post, courier or email to that other Party at the address specified for such purpose in that Party's Party Details.

59.7 Unless otherwise stated in this Agreement, a notice, request or other communication sent in accordance with Clauses 30.5, 59.6 or paragraph 11.1 of Schedule 8 shall be deemed to be received:

59.7.1 if delivered personally, when left at the address set out for such purpose in the relevant Party's Party Details;

59.7.2 if sent by post, three Working Days after the date of posting; and

59.7.3 if sent by email, one hour after being sent, unless an error message is received by the sender in respect of that email before that hour has elapsed.

59.8 Notices to or from DCUSA Ltd shall also be subject to the provisions of Clause 59.7, and notices to DCUSA Ltd shall be sent to the address given, from time to time, on the Website (or, in the absence of any such address, to its registered office).

59.9 Notices to the Panel shall also be subject to the provisions of Clause 59.7, and notices to the Panel shall be sent care of the Secretariat to the address given, from time to time, on the Website (or, in the absence of any such address, to the registered office of DCUSA Ltd).

60. MISCELLANEOUS

Entire Agreement

60.1 This Agreement and any document referred to therein represents the entire understanding, and constitutes the whole agreement, in relation to its subject matter; and supersedes any previous agreement whether written, oral, or deemed between any of the Parties with respect thereto and, without prejudice to the generality of the foregoing, excludes any warranty, condition or other undertaking implied at law or by custom.

60.2 Each Party confirms that, except as provided in this Agreement and without prejudice to any liability for fraudulent misrepresentation, it has not relied on any representation, warranty or undertaking which is not contained in this Agreement or any document referred to therein.

Severability

60.3 If any provision of this Agreement shall be held to be invalid or unenforceable by a judgement or decision of any court of competent jurisdiction or any Competent Authority whose decisions are binding on the Parties, that provision shall be deemed severable and the remainder of this Agreement shall remain valid and enforceable to the fullest extent permitted by law. In any such case, the Parties will negotiate in good faith with a view to agreeing one or more provisions which may be substituted for such invalid or unenforceable provision in order to give effect, so far as practicable, to the spirit of this Agreement.

Waivers

60.4 The failure by any Party to exercise, or the delay by any Party in exercising, any right, power, privilege or remedy provided under this Agreement or a Distribution Code or by law shall not constitute a waiver thereof nor of any other right, power, privilege or remedy. No single or partial exercise of any such right, power, privilege or remedy shall preclude any future exercise thereof or the exercise of any other right, power, privilege or remedy.

Contract Management

60.5 Each Party (other than DCUSA Ltd) shall appoint an appropriate person (each a **Contract Manager** and together the **Contract Managers**) to manage all matters arising under or in connection with this Agreement and to monitor the general operation of this Agreement.

60.6 The Contract Manager relating to each Party from time to time shall be the person referred to in that Party's Party Details.

60.7 The Contract Manager of each Party shall meet with the Contract Manager of each other Party (collectively or individually) at such venues and at such intervals as may be agreed between the Parties from time to time.

Third Party Rights

60.8 Except for the benefit:

60.8.1 that DCUSA Ltd holds under Clause 6.22;

60.8.2 that each Party holds under Clause 53.8;

60.8.3 bestowed on Offshore Transmission Owners by Clause 53.10 (which shall be enforceable by Offshore Transmission Owners); and

60.8.4 that Green Deal Providers hold under Clause 25.19C,

the Parties do not intend that any of the Agreement's terms will be enforceable by a third party (whether by virtue of the Contracts (Rights of Third Parties) Act 1999 or otherwise).

60.9 Notwithstanding that a person who is not a Party may have a right to enforce particular Clauses under the Contracts (Rights of Third Parties) Act 1999 in accordance with Clause 60.8, the Parties may vary or terminate this Agreement in accordance with its terms without requiring the consent of any such person.

Assignment and Sub-contracting

60.10 No Party may assign any of its rights under this Agreement without the prior written consent of the other Parties, such consent not to be unreasonably withheld.

60.11 Any Party may sub-contract or delegate the performance of all or any of its obligations under this Agreement (including activities envisaged by a Distribution Code) to any appropriately qualified and experienced third party, but shall at all times remain liable to the other Parties in relation to all sub-contracted or delegated obligations.

Law and Jurisdiction

60.12 Each Party agrees that, in performing its obligations pursuant to this Agreement, it shall be required to comply with relevant statutes, statutory instruments and the general law and shall not be liable for any failure to perform its obligations in accordance with this Agreement where to do so would put it in breach of any such statute, statutory instrument or general provision of law.

60.13 Each Party agrees that, without preventing any other mode of service, any document in an action (including any writ of summons or other originating process or any third or other party notice) may be served on any Party by being delivered to or left for that Party at its address for service of notices referred to in Clause 59.

60.14 This Agreement shall be governed by and construed in accordance with the laws of England and Wales. Subject to Clause 58, the Parties hereby submit to the exclusive jurisdiction of the courts of England and Wales and of Scotland.

60.15 The words and expressions used in this Clause 60.15 and not defined elsewhere in this Agreement shall be interpreted in accordance with any meaning given to them in the Data Protection Legislation.

a. From time to time, personal data may be shared between Parties in accordance with the provisions of this Agreement.

b. It is acknowledged that each Party is likely to process such personal data as a data controller, and when jointly agreeing on the manner in which, and the purpose for which, such data is processed, as joint data controllers.

c. Each Party warrants that it has effected, and undertakes that it shall (while it remains a Party to this Agreement) effect and maintain, all such notifications and registrations as it is required to effect and maintain under the Data Protection Legislation to enable it lawfully to perform the obligations imposed on it by this Agreement, and exercise the rights granted to it by this Agreement.

d. Each Party undertakes to comply with the Data Protection Legislation in the performance of this Agreement, including ensuring that it has a lawful basis for sharing personal data with another Party and that it complies with the Data Protection Legislation in relation to such sharing of personal data.

e. Each Supplier Party shall provide to its Customers, and each DNO/IDNO Party shall provide to its Connectees the information (if any) required by the Data Protection Legislation to be provided by them in respect of the processing to be undertaken under this Agreement. If a data subject is dealing with two or more Parties at the same time, then both those Parties shall be separately responsible for complying with their obligations under the Data Protection Legislation regarding the processing of the data subject's personal data.

f. Each Party shall comply with the Data Protection Legislation as regards the exercise of rights by data subjects for which the Party is the data controller. In particular, each Party shall designate its own contact point responsible for dealing with data protection queries raised by data subjects for which the Party is the data controller. Unless otherwise agreed bilaterally in writing at the relevant time, and to the extent any Parties are joint controllers:

   i. each Party shall independently comply with the Data Protection Legislation regarding the rights of data subjects under the Data Protection Legislation; and

   ii. each Party shall independently inform the data subjects about its processing activities and shall refer to the other joint controller in such notices.

g. The Parties do not anticipate that they will act as data processors in relation to any personal data shared pursuant to this Agreement. If a Party becomes aware of instances in which personal data may be processed under this Agreement by a Party as a data processor it shall notify the Panel so that consideration can be given to whether a Change Proposal should be raised to describe such personal data and the purpose, nature and duration of such processing, and to set out the clauses required by the Data Protection Legislation to be included in contracts between data controllers and data processors.

Novation

60.16 With the approval of the Panel (at their discretion, but subject to Clauses 60.17 and 60.20), a Party may transfer its rights and obligations under this Agreement to another entity. In order to give effect to such transfer, the transferring Party, the transferee entity and DCUSA Ltd (on behalf of itself and each other Party) shall enter into a novation agreement (in substantially the form set out in Schedule 9A). For clarity, the entity wishing to take a transfer of rights and obligations may or may not already be a Party via its own Accession Agreement.

60.17 Without limitation, the Panel must not approve novation to a transferee entity which, if not already a Party, is not eligible to accede to this Agreement in the Party Category(ies) of the transferring Party or which, if already a Party, is not eligible to add the Party Category(ies) of the transferring Party to its existing accession.

60.18 Each Party hereby irrevocably and unconditionally authorises DCUSA Ltd to execute and deliver, on behalf of such Party, any novation agreement approved by the Panel under Clause 60.16.

60.19 Where the transferee entity is already a Party, the transferred rights and obligations shall become subject to such Party's existing Accession Agreement from the effective date of the novation agreement. Where the transferee entity is not already a Party, the transferring Party's Accession Agreement shall, from the effective

date of the novation agreement, be treated as the transferee Party's Accession Agreement (and the transferee entity shall be deemed to have acceded to this Agreement).

60.20 The effect of each novation agreement entered into pursuant to Clause 60.16 will be to end the transferring Party's accession to this Agreement from the effective date of the novation agreement. Accordingly, the Panel shall not approve a Party's transfer of its rights and obligations under Clause 60.16 if such Party's accession cannot be terminated in accordance with Clause 54.6.

Directions related to national security

60.21 The Secretary of State may issue a direction to the OTSO Party as referred to in condition B4 of the OTSO Party's Electricity System Operator Licence where in the opinion of the Secretary of State there is a risk relating to national security that may detrimentally impact the resilience, safety or security of the energy system, or the continuity of essential services, and it is in the interest of national security that a direction should be issued to the ISOP.

60.22 The OTSO Party must comply with any such direction that has been issued by the Secretary of State. DNO/IDNO Parties should note that the OTSO Party is not required to comply with any other obligation in the Electricity System Operator Licence, where and to the extent that compliance with that obligation would be inconsistent with the requirement to comply with such a direction, for the period set out in the direction. This includes the requirement set out in Condition E5 of the OTSO Party's Electricity System Operator Licence to comply with this Agreement.

60.23 The OTSO Party is required under Condition B4 of its Electricity System Operator Licence to inform the Secretary of State of any conflict with the obligations as identified in Clause 60.22 as soon as reasonably practicable after the conflict is identified. The OTSO Party will include in such a notice, details of any identified impact or non-compliance that will be caused or will be likely to be caused to a DNO/IDNO Party, and in such a case will also seek clarification of whether this can be shared with the affected DNO/IDNO Party.

60.24 Where reasonably practicable and subject to the agreement of the Secretary of State to share any such specific details, the OTSO Party will inform each affected DNO/IDNO Party as identified in Clause 60.23 of what actions the OTSO Party will or has taken, or not taken, to comply with a direction or amended direction (including when such a direction is revoked) and what identified impact or non-compliance this will or is likely to cause to the DNO/IDNO Party.

60.25 The OTSO Party's obligations under this Agreement and any contracts made under this Agreement shall be suspended without liability where and to the extent that compliance with any such obligation would be inconsistent with the requirement upon the OTSO Party to comply with a direction.

60.26 A DNO/IDNO Party's obligations under this Agreement and any contracts made under this Agreement shall be suspended without liability where and to the extent that the DNO/IDNO Party is unable to comply with any such obligation as a result of any action taken, or not taken, by the OTSO Party to comply with a direction.

60.27 The Secretary of State may at any time amend or revoke any direction issued to the OTSO Party as referred to in Condition B4 of the OTSO Party's Electricity System Operator Licence.

Advisory And Information Requests

60.28 The OTSO Party is required to provide advice, analysis or information to the Authority or to a Minister of the Crown when requested in accordance with section 171 of the Energy Act 2023 and Condition D1 of the

Electricity System Operator Licence and Gas System Planner Licence.

60.29 The OTSO Party may by notice request from a Party (“a recipient”), such information as it reasonably requires in connection with the exercise of any of its functions, in accordance with section 172 of the Energy Act 2023. It will do so by the issue of an Information Request Notice. The purposes of this may include to assist in the fulfilment of a request for advice, analysis or information as set out in Clause 60.28.

60.30 The OTSO Party is required by Condition D2 of the Electricity System Operator Licence and Gas System Planner Licence to prepare, submit for approval by the Authority and publish on its website once approved an Information Request Statement that sets out further detail on the process the OTSO Party expects to follow when requesting information from other parties.

60.31 The Information Request Statement must include, but need not be limited to, the following matters as set out in Condition D2.5 of the Electricity System Operator Licence and Gas System Planner Licence:

60.31.1 the process the OTSO Party expects to follow when issuing an Information Request Notice, including any further detail around the expected engagement between the OTSO Party and recipient of an Information Request Notice; and

60.31.2 the details to be included in an Information Request Notice issued by the OTSO Party.

60.32 A recipient to whom a request is made under Clause 60.29 must, so far as reasonably practicable, provide the requested information within such reasonable period, and in such reasonable form and manner, as may be specified in the Information Request Notice.

60.33 The OTSO Party must, unless the Authority otherwise consents, maintain for a period of 6 years and provide to the Authority where required a record of information requests as detailed in Condition D2.12 of the Electricity System Operator Licence and Gas System Planner Licence including:

60.33.1 a copy of the Information Request Notice;

60.33.2 any subsequent variations to the original information requested;

60.33.3 the recipient’s response to the notice, including any refusal or challenges to the notice or requested information;

60.33.4 the time taken for the recipient to provide the requested information;

60.33.5 the manner and form the information was provided in; and

60.33.6 the information provided in response to the notice, and whether such information complied, in the OTSO Party's view, with the Information Request Notice.

SCHEDULE 1: COVER

1. PROVISION OF COVER

Forms of Collateral

1.1 The User shall deliver to the Company one or more of the following forms of Collateral such that the aggregate value of such Collateral is equal to or greater than the sum notified to the User by the Company as the User's Value at Risk to the extent that it exceeds the User's Credit Allowance:

a. a Letter of Credit or equivalent bank guarantee (available for an initial period of not less than six months);
b. an Escrow Account Deposit;
c. a Cash Deposit; or
d. any other form of Collateral as agreed between the Company and the User from time to time, including but not limited to performance bonds, bilateral insurance, and independent security. The Company may rate the effectiveness of such Collateral as being between 0% and 100%. Where the effectiveness of such Collateral is rated as less than 100%, its contribution to the aggregate level of Cover provided shall be reduced accordingly.

1.2 Any dispute raised by the User or the Company on the form of Collateral provided under Paragraph 1.1(d) or on the rating of any such Collateral shall be dealt with under Paragraph 8. Any requirement for payment to be made under such Collateral shall be dealt with in accordance with Paragraph 4.

Maintenance of Cover

1.3 The User may increase the value of Collateral provided or provide additional forms of Collateral at any time during the term of this Agreement.

1.4 Where:

a. there is any reduction in the amount of Collateral provided by the User as Cover; or
b. the Company makes a demand against such Collateral following a Payment Default by the User,

the User shall provide additional Collateral to ensure that the Indebtedness Ratio is equal to or lower than the Indebtedness Ratio Limit according to the provisions of this Schedule.

2. CALCULATION OF COVER

2.1 For the duration of this Schedule's application, the Company shall calculate and maintain a record of each of the following values with respect to the User, that is to say:

a. the User's Value at Risk;
b. the User's Credit Allowance; and
c. the User's Indebtedness Ratio,

in such manner as will enable the Company, upon request by the User, to provide a written and up-to-date statement of such values without delay.

The User's Value at Risk

2.2 At any time, the User's Value at Risk shall be the aggregate of:

a. billed but unpaid Charges which are not currently subject to a Designated Dispute (as defined in Schedule 4) and which have been billed to the User according to an established billing cycle operated by the Company pursuant to this Agreement;

plus

b. the Fifteen Days' Value, which shall be the estimated value of the Charges that would be incurred by the User for a further 15 days from that time, based on the average daily Charges billed to the User (whether under this Agreement or any use of system agreement applying between the User and the Company immediately before this Agreement became effective) using the latest available bill raised in respect of a full calendar month (or a number of days that approximates to a full calendar month), according to the established billing cycle operated by the Company;

less

c. any credit notes and any amounts paid to the Company by the User in the form of a Prepayment or an Advance Payment.

The User's Credit Allowance

2.3 The User's Credit Allowance (CA here below) shall be calculated according to the following formula:

$$CA = RAV \times 2\% \times CAF$$

where:

RAV is calculated for each Regulatory Year in accordance with the formula set out below (or, where no price control financial model is published in relation to the Company, shall be a value to be determined by the Authority as a suitable replacement following consultation with the Company):

$$RAV = \mathrm{RAV}_{2020-21} \times PI_{May-23} \times \mathrm{CPIH}$$

where:

$RAV_{2020\text{-}21}$ = the Company's *Opening RAV (after transfers)* for the Regulatory Year prior to that in which RAV is effective from the *Return&RAV* worksheet of the price control financial model most recently published by the Company (in support of a variation to Use of System Charges) prior to the Regulatory Year in which RAV is effective, in 2020-21 prices;

$PI_{May\text{-}23}$ = 1.273 (which inflates 2020/21 prices to May-23, using RPI up to Mar-23, the spliced RPI:CPIH for Apr-23 and CPIH for May-23).

For clarity, 1.273 is the movement in "PI_m" in Column N of the PCFM *Monthly Inflation worksheet*, from the average RPI for 2020/21 of 294.167 (i.e. the average of the 12 monthly values) up to the May-23 spliced index value of 374.493 in Column N of the PCFM *Monthly Inflation worksheet*); and

$$CPIH = \frac{\mathrm{CPIH}_{n-1}}{129.1}$$

For which purposes, $CPIH_{n\text{-}1}$ = the arithmetic average of the Office for National Statistics CPIH INDEX 00: ALL ITEMS 2015=100, published with respect to the months of December and January most recently preceding the start of the Regulatory Year to which RAV is to apply.

For clarity, 129.1 is the CPIH index factor for May-23 from the series L522 for mm23 (*CPIH INDEX 00: ALL ITEMS 2015=100 - Office for National Statistics*).

CAF is the Credit Allowance Factor (which is to be expressed as a percentage determined pursuant to Paragraph 2.4 or 2.5). For clarity, until a percentage has been determined for a User pursuant to Paragraph 2.4 or 2.5, its CAF shall be zero.

2.4 Where the User has a Credit Rating from an Approved Credit Referencing Agency that is Ba3/BB- or above, CAF shall be determined according to the following table. For the purposes of this Schedule, and subject to evidence to the contrary, all IDNO Parties shall be deemed to have a rating of Baa3 / BBB-.

Credit Rating		**CAF (%)**
Moody's	Standard and Poor's	
Aaa to Aa2	AAA to AA	100
Aa3 to A3	AA- to A-	40
Baa1	BBB+	20
Baa2	BBB	19
Baa3	BBB-	18
Ba1	BB+	17
Ba2	BB	16
Ba3	BB-	15

2.5 Where the User does not have a Credit Rating from an Approved Credit Referencing Agency that is Ba3 / BB- or above, CAF shall be determined as follows:

a. where there is, at the time of such determination, an Independent Credit Assessment that was carried out within the preceding 12 months and the User has not requested that the Company use the User's Payment Record Factor, CAF shall be determined by reference to the Independent Credit Assessment provided pursuant to Paragraph 2.6 or procured pursuant to Paragraph 2.7 (and, in either case, in accordance with the table set out at Paragraph 2.10);

b. where the User has requested that the Company use the User's Payment Record Factor or there is not, at the time of such determination, an Independent Credit Assessment that was carried out within the preceding 12 months, CAF shall (unless the Company opts to apply sub-paragraph (c) below) equal the Payment Record Factor (which shall be determined in accordance with the provisions of Paragraphs 2.12 to 2.15); or

c. where the Company has used the User's Payment Record Factor for a period of 60 months or more (and the User does not, when notified by the Company, opt to provide an Independent Credit Assessment pursuant to Paragraph 2.6 or request the Company to procure an Independent Credit Assessment pursuant to Paragraph 2.7), then the Company may (at its discretion) opt to use an Independent Credit Assessment and notify the User it has done so (in which case Paragraphs 2.8 to 2.10 shall apply).

Credit Assessment Score

2.6 For the purposes of determining CAF pursuant to Paragraph 2.5(a), the User may, no more than once a year, provide to the Company an Independent Credit Assessment from a Recognised Credit Assessment Agency chosen by the User.

2.7 As an alternative means of determining CAF pursuant to Paragraph 2.5(a), the User may, no more than once a year, request that the Company obtains an Independent Credit Assessment from a Recognised Credit Assessment Agency chosen by the Company. In which case, as soon as reasonably practicable following such request (or within such other period as the Company and the User may agree), the Company shall procure from that Recognised Credit Assessment Agency (and shall provide to the User) a credit assessment of the User.

2.8 Where the Recognised Credit Assessment Agency that is used is listed in the table below, and it undertakes an assessment on the basis of one of its credit assessment products listed below, the results of such assessment will give rise to the corresponding Credit Assessment Score set out below:

Credit Assessment Score	**Equivalence of the Credit Assessment Score to credit scores provided by Recognised Credit Assessment Agencies in their Independent Credit Assessments.**				
	Check It (ICC)	**Dunn & Bradstreet / N2 Check**	**Equifax**	**Experian**	**Creditsafe**
	Credit Score Report	**Comprehensive Report**		**Business Express (EBE) / Business IQ (BIQ)**	
10	95-100	5A1/	A+	95-100	86-100
9	90-94	5A2/4A1	A /A-	90-94	71-85
8	80-89	5A3/4A2/3A1	B+	80-89	61-70
7	70-79	4A3/3A2/2A1	B/B-	70-79	51-60
6	60-69	3A3/2A2/1A1	C+	60-69	41-50
5	50-59	2A3/1A2/A1	C/C-	50-59	30-40
4	40-49	1A3/A2/B1	D+	40-49	25-29
3	30-39	A3/B2/C1	D/D-	30-39	21-24
2	20-29	B3/C2/D1	E+	20-29	15-20
1	10-19	C3/D2/E1	E/E-	10-19	10-14
0	Below 10	Below E1	Below E-	Below 10	Below 10

2.9 Where the Recognised Credit Assessment Agency that is used is not listed in Paragraph 2.8 (or where the credit assessment product is not listed in Paragraph 2.8), the Company shall (acting reasonably) determine the applicable Credit Assessment Score on an equivalent basis to that set out in Paragraph 2.8.

2.10 Where the value of CAF is to be determined in accordance with Paragraph 2.5(a) or 2.5(c), the value of CAF shall be that which corresponds in the following table to the Credit Assessment Score set out below:

Credit Assessment Score	**CAF (%)**
10	20
9	19
8	18
7	17
6	16.66
5	15
4	13.33
3	10
2	7
1	3.33
0	0

Additional Credit Assessment

2.11 During the 12-month period following completion of an annual Independent Credit Assessment pursuant to Paragraph 2.6, the User may request that the Company procure further Independent Credit Assessments for

the purpose of requiring the Company to recalculate the User's Credit Allowance. Where the User so requests, Paragraphs 2.7 to 2.10 shall apply (provided that, where the Company so requests, the User shall pay the Company's reasonable costs in procuring such Independent Credit Assessments).

Payment Record Factor

2.12 Where the User's Payment Record Factor is to be used to determine the Credit Allowance Factor in accordance with Paragraph 2.5 (b), the Credit Allowance Factor shall equal the value of the Payment Record Factor determined in accordance with Paragraphs 2.13 to 2.15.

2.13 With effect from 29 June 2023, the Payment Record Factor shall equal the number of months since the Good Payment Performance Start Date (as specified in Paragraph 2.14) multiplied by 0.033% (that is to say, by 0.4% per annum), subject to the following provisos and caps:

a. during the first 36 months from the first relevant account (as referred to in Paragraph 2.14(a) or 2.14(b), as applicable to the User), the Payment Record Factor shall be capped at a maximum value of 1.2% (i.e. the maximum which could be earned in that period);

b. during months 37 to 48 (inclusive) following such first relevant account, the Payment Record Factor shall be capped at a maximum value of 0.7%;

c. during months 49 to 60 (inclusive) following such first relevant account, the Payment Record Factor shall be capped at a maximum value of 0.4%;

d. from and including the 6 month following such first relevant account, the Payment Record Factor shall always be zero; and

e. on each occasion that the User fails to pay any Charges on or before the date by which such payment is required to be made under this Agreement (but for which the delay in payment is not so great as to create a new Good Payment Performance Start Date under Paragraph 2.14(c)), the Payment Record Factor that would otherwise apply shall be reduced as follows:

Age of debt past payment date when settled (Working Days)	**Value of late payment as a percentage of total Charges invoiced in the same month**	**Reduction to Payment Record Factor**
1 to 3	<25%	Loss of 25% of previously accrued good payment performance
	≥25% and <75%	Loss of 50% of previously accrued good payment performance
	≥75%	Loss of 100% of previously accrued good payment performance

2.13A The Company shall give the User notice of any adverse change in the calculation of its Payment Record Factor under Paragraph 2.13.

2.13B It is acknowledged that the User's first relevant account (as referred to in Paragraph 2.14(a) or 2.14(b), as applicable to the User) may have been before 29 June 2023, and furthermore that it might have been more than 60 months before 29 June 2023 (such that the User's Payment Record Factor shall always be zero from 29 June 2023).

2.14 The Good Payment Performance Start Date shall:

a. for Users under Section 2A, initially, be the date of the earliest of the first Initial Account, the first Reconciliation Account, or the first account issued pursuant to Clause 21 (each a **relevant account**);

b. for Users under Section 2B, initially, be the date of the earliest of the first account issued pursuant to Clause 44 or 45 (each a **relevant account**); and

c. for all Users, where the User fails (or has failed) on any occasion to pay any Charges on or before the applicable payment date required by this Agreement (and does not remedy that failure within 3 Working Days such that Paragraph 2.13(e) applies), be the date on which a relevant account is submitted in a month subsequent to the month in which such payment failure is remedied (unless, having regard to all the circumstances, including in particular the value, duration, and frequency of failure, the Company reasonably determines an earlier date).

2.15 Where any unpaid disputed invoice is found to have been disputed without merit, a failure to have paid the relevant account in accordance with the terms of this Agreement shall be treated as a failed payment and the provisions of Paragraph 2.14(c) shall apply accordingly.

The User's Indebtedness Ratio

2.16 The Credit Limit for the User shall equal the Credit Allowance plus the aggregate value of the Collateral provided on any day.

2.17 The Indebtedness Ratio for the User shall equal the Value at Risk as a percentage of the Credit Limit.

2.18 If, on any day, the User's Indebtedness Ratio equals or is greater than 85% of the User's Indebtedness Ratio Limit, the Company shall give notice of this to the User.

Credit Allowance Where Credit Support is Provided by a Third Party

2.19 Where credit support is provided for the User through a Qualifying Guarantee by a third party (the **Credit Support Provider**), the maximum Credit Allowance assigned to the User shall be calculated in accordance with Paragraph 2.3, but substituting the Credit Support Provider for the User in all such calculations. Where the value of the Qualifying Guarantee is lower than the Credit Allowance calculated pursuant to Paragraph 2.3, the User's actual Credit Allowance shall be the maximum value of the Qualifying Guarantee.

2.20 Where a Credit Support Provider provides a Qualifying Guarantee for the User and for other users of the Company's Distribution System, the aggregate of all Qualifying Guarantees so offered shall not exceed the maximum Credit Allowance that could be determined for that Credit Support Provider pursuant to Paragraph 2.3.

2.21 Where the User disputes the Company's calculation of Value at Risk or the Credit Allowance, the provisions of Paragraph 8 of this Schedule shall apply.

3. INCREASE OR DECREASE OF COVER REQUIREMENT

3.1 The following provisions have effect in relation to cover requirements pursuant to the circumstances specified under the relevant headings in this Paragraph 3.

Increase in Cover Requirements Pursuant to a Change in the Value at Risk or Increase in the Indebtedness Ratio

3.2 If, on any Working Day, the User's Indebtedness Ratio equals or is greater than its Indebtedness Ratio Limit because of either (a) an increase in the User's Value at Risk; or (b) a decrease in the Credit Allowance Factor, then (in either) the Company shall give notice of this to the User on the following Working Day and

the User shall take all appropriate action to ensure that its Indebtedness Ratio is equal to or below 80% within two Working Days of its receipt of such notice.

3.3 It shall be a Cover Default if the User fails to remedy a default under Paragraph 3.2 within the prescribed timescale.

3.4 Following a Cover Default under Paragraph 3.3, the User's Indebtedness Ratio Limit shall be decreased to 80% for one year following rectification of the default, after which time it shall be increased back to 100%.

Actions in Relation to Cover Default

3.5 In addition to any other remedies available to it, the Company shall be entitled to take the following actions following a Cover Default (provided that, where the provision of registration services or the right to make future connections under Section 2B (as applicable) has been suspended at any time after Day 0 + 5, then the Company must, as soon as the Cover Default has been remedied, reinstate the right to registration services or the right to make future connections under Section 2B (as applicable) in accordance with Clause 54.4B):

Working Days After Cover Default	**Action Within the Company's Rights Under this Schedule**
Day 0	Date of default
Day 0 + 1	Interest and administration fee start to apply.
Day 0 + 1	Issue notice of default to Contract Manager containing a statement of the Indebtedness Ratio and send a copy of such notice to the Authority.
Day 0 + 3	Formal User response required.
Section 2A	
Day 0 + 5	An Event of Default under Clause 54.1.1 is deemed to have occurred, and the Company may suspend registration services in accordance with Clause 54.2.1.
Section 2B	
Day 0 + 5	An Event of Default under Clause 54.1.1 is deemed to have occurred, and the Company may suspend the right to make any further connections to the Company's Distribution System in accordance with Clause 54.2.1.

Increase or Decrease in Cover Requirements Pursuant to a Change in the RAV

3.6 The Company shall give the User one month's written notice of its intention to use a new value of RAV to calculate the Credit Allowance according to Paragraph 2.3. Such notice shall state the new value of RAV and the date on which the Company will begin to use that value in such calculation.

Decrease in Cover Requirements

3.7 The User may by notice to the Company decrease the amount of Collateral at any time provided that such decrease would not cause the Indebtedness Ratio to exceed the Indebtedness Ratio Limit.

3.8 The Company shall, within two Working Days of its receipt of a notice from the User pursuant to Paragraph 3.7, undertake actions to facilitate the reduction, or the return to the User, of such Collateral.

Increase in Cover Requirements Because of the Expiry of a Letter of Credit

3.9 Not later than 10 Working Days before any outstanding Letter of Credit is due to expire, the User shall either procure to the satisfaction of the Company that it (or a suitable replacement Letter of Credit which meets the Company's reasonable requirements) will be available for a further period of not less than six months, or provide an alternative form of Collateral as set out in Paragraph 1.1.

Release from Cover Obligations

3.10 Upon the User ceasing to be a Party to this Agreement, and once all the amounts owed by the User in respect of Charges and any other amount owed by the User to the Company under this Agreement have been duly and finally paid, including interest, the User shall be released from the obligation to maintain Cover in respect of the Company and the Company shall consent to the revocation of any outstanding Qualifying Guarantee or Letter of Credit, and the User shall be entitled to withdraw the balance (if any) (including interest credited thereto) outstanding to the credit of the User in the Escrow Account at the relevant date and to request the return or termination of any other form of Collateral provided.

4. USE OF COVER FOLLOWING PAYMENT DEFAULT

4.1 This Paragraph applies if, after 17:30 hours on any Payment Date, the Company has been notified by the User or otherwise has reason to believe that the User has not remitted to it by close of banking business on the Payment Date all or any part (the **amount in default**) of any amount which has been notified by the Company to the User as being payable by the User by way of the Charges on the relevant Payment Date, or any other amounts owing under this Agreement except for the disputed amount of a Designated Dispute (as defined in Schedule 4).

4.2 Where Paragraph 4.1 applies, a Payment Default exists and the Company shall (in addition to any other remedies available to it) be entitled to act in accordance with the following provisions (or whichever of them may apply) in the order in which they appear below until the Company is satisfied that the User has discharged its obligations in respect of Charges or such other amounts under this Agreement which are payable in respect of the relevant account:

a. the Company, to the extent that the User is entitled to receive payment from the Company pursuant to this Agreement (unless it reasonably believes that such set-off would be unlawful), shall be entitled to set off the amount of such entitlement against the amount in default;
b. the amount of funds then standing to the credit of the Escrow Account or the amount of any Cash Deposit (excluding any interest accrued thereon to the benefit of the User) shall be released to the Company and set off against the amounts unpaid by the User, and for that purpose the Company shall be entitled to place such funds in any account of the Company at its sole discretion and shall notify the User accordingly;
c. the Company may demand payment under any Letter of Credit for a sum not exceeding the amount of the Cover;
d. the Company may demand payment under any outstanding Qualifying Guarantee provided for the benefit of the User pursuant to Paragraph 2.19; or
e. the Company may demand payment under any other form of Collateral provided under Paragraph 1.1 (d) in the manner which the Company and the User have previously agreed as appropriate in relation to that particular form of Collateral or, in the absence of such agreement, in a manner which the Company (acting reasonably) considers appropriate in relation thereto.

5. UTILISATION OF FUNDS

5.1 In addition to the provisions of Paragraph 4, if an Event of Default occurs in respect of the User in accordance with Clause 54, the Company shall be entitled:

a. to demand payment of any of the Charges and any other amounts owed by the User under this Agreement which are outstanding, whether or not the Payment Date in respect of them has passed; and

b. to make demand under any outstanding Qualifying Guarantee or a call under any outstanding Letter of Credit supplied by the User,

and the funds in the Escrow Account to the extent that they represent Cover provided by the User shall be released to the Company and set off against the Charges and any other amount owed by the User under this Agreement that is unpaid by the User, and for that purpose the Company shall be entitled to place any such amount released to it from the Escrow Account to any account of the Company as in its sole discretion it thinks fit.

6. USER'S RIGHT TO WITHDRAW FUNDS

6.1 If the User is not in default in respect of any amount owed to the Company in respect of the Charges or any other amount owed by the User under this Agreement, the Company shall permit the release to the User, within two Working Days of receiving the User's written request for it, of any amount of cash provided by the User by way of Cover which exceeds the amount which the User is required to provide in accordance with this Schedule.

6.2 Interest on the amount deposited in an Escrow Account (at a rate to be agreed by the User with the bank at which such account is held) or on the amount of a Cash Deposit (at a rate to be agreed between the Company and the User) shall accrue for the benefit of the User.

7. NO SECURITY

7.1 Nothing in this Schedule shall be effective to create a charge on or any other form of security interest in any asset comprising part of the User's business.

8. DISPUTES

8.1 The Company and the User shall attempt to resolve in good faith any dispute that may arise under or in relation to the provisions of this Schedule.

8.2 Where any such dispute remains unresolved after 10 Working Days, either of the Company or the User may refer the matter to the Authority for determination as if it were a dispute falling within Condition 7 of the Company's Distribution Licence.

8.3 A determination by the Authority under this Paragraph 8 shall be final and binding.

9. NOTICES

9.1 Contact details for notices issued under this Schedule, and the form of such notices and the manner of their service, shall be as agreed between the Company and the User. Where no such agreement exists, the provisions of Clause 59 shall apply.

10. DEFINITIONS

10.1 In this Schedule, and without prejudice to the provisions of Paragraph 10.2, the following words or expressions shall have the meanings set opposite them:

Advance Payment	means a deposit of funds by or on behalf of the User as early payment relating to any invoice issued but not yet due into a bank account specified by the Company, in the name of the Company.
Approved Credit Referencing Agency	means Moody's Investors Service or Standard and Poor's Ratings Group or such replacement agency as may be notified by the Authority from time to time for the purposes of this Schedule.
Cash Deposit	means a deposit of funds by or on behalf of the User into a bank account in the name of the Company.
Collateral	means the implements (excluding parent company guarantees) through which the User can provide Cover, as set out in Paragraph 1.1 and as may be amended or added to from time to time by the Company with the Authority's approval.
Cover	means the aggregate amount of Collateral which the User is required to provide and maintain in accordance with the provisions of this Schedule.
Cover Default	has the meaning given to that term in Paragraph 3.3.
Credit Allowance (CA)	has the meaning given to that term in Paragraph 2.3.
Credit Allowance Factor (CAF)	has the meaning given to that term in Paragraph 2.3.
Credit Assessment Score	means a Credit Assessment Score as determined pursuant to Paragraph 2.8 or 2.9.
Credit Limit	has the meaning given to that term in Paragraph 2.16.
Credit Rating	means a long-term debt rating from an Approved Credit Referencing Agency.
Credit Support Provider	has the meaning given in Paragraph 2.19.
Escrow Account	means a separately designated bank account in the name of the User at such branch of any bank in the United Kingdom as the Company shall specify (**the Bank**) (on terms to be approved by the Company and which provide, amongst other things, that the funds held in the Escrow Account may be released by the Bank to the Company in the circumstances envisaged in Paragraphs 3 and 4 with the right to direct payments from the Escrow Account in favour only of the Company until the events specified in Paragraph 3.10 have occurred) to which all deposits required to be made by the User pursuant to this Schedule shall be placed, provided that such proceeds are not to be withdrawn by the User save in accordance with the provisions of this Schedule.
Escrow Account Deposit	means a deposit of funds by or on behalf of the User into an Escrow Account.
Fifteen Days' Value	has the meaning given to that term in Paragraph 2.2 (b).
Good Payment Performance Start Date	has the meaning given to that term in Paragraph 2.14.
Indebtedness Ratio	has the meaning given to that term in Paragraph 2.17.
Indebtedness Ratio Limit	shall be 100% unless otherwise notified by the Company under the provisions of this Agreement.
Independent Credit Assessment	means a credit assessment of the User from a Recognised Credit Assessment Agency, whether provided by the User pursuant to Paragraph 2.6 or obtained by the Company pursuant to Paragraph 2.5(c) or 2.7.
Letter of Credit	means an unconditional irrevocable standby letter of credit in such form as the Company may reasonably approve issued for the account of the User in sterling in favour of the Company, allowing for partial drawings and providing for the payment to the Company forthwith on demand by any United Kingdom clearing bank or any other bank which in each case has a long-term debt rating of not less than single A by Standard and Poor's Ratings Group or by Moody's Investors Service, or such other bank as the Company may approve and which shall be available for payment at a branch of the issuing bank.
Payment Date	means the due date for payment of any Initial Account, Reconciliation Account, or other account submitted to the User pursuant to this Agreement.
Payment Default	has the meaning given to that term in Paragraph 4.2.
Payment Record Factor	has the meaning given to that term in Paragraph 2.13.
Prepayment	means a deposit of funds by or on behalf of the User as early payment relating to future invoices not yet issued into a bank account specified by the Company, in the name of the Company.
Qualifying Guarantee	means a guarantee in favour of the Company which is legally enforceable in the United Kingdom and in such form as may be agreed between the Company and the User and which may specify a maximum value.

Recognised Credit Assessment Agency	means any of the credit assessment agencies listed at Paragraph 2.8, or any other credit assessment agency reasonably believed by the Company and the User to be fit for the purpose of providing credit assessments pursuant to this Schedule, taking account of all the circumstances applicable to the User.
Value at Risk	has the meaning given to that term in Paragraph 2.2.

10.2 Any other words or expressions used in this Schedule (excluding headings or any parts thereof) which bear initial capital letters and are defined elsewhere in this Agreement shall have the same respective meanings as are given to them elsewhere in this Agreement.

SCHEDULE 2:

SCHEDULE 2A - MANDATORY TERMS FOR CONTRACTS

The following wording is to be included in Contracts in accordance with Clause 17, and the text shown in bold below must be set out in bold in the Contracts (or highlighted in some other similar manner):

National Terms of Connection

Your supplier is acting on behalf of your network operator to make an agreement with you. The agreement is that you and your network operator both accept the National Terms of Connection (NTC) and agree to keep to its conditions. This will happen from the time that you enter into this contract and it affects your legal rights. The NTC is a legal agreement. It sets out rights and duties in relation to the connection at which your network operator delivers electricity to, or accepts electricity from, your home or business. **In the case of some non-domestic sites, as further described in the NTC, the NTC provide for the continuing application of site-specific connection terms agreed with a previous owner or occupier of the site. Your network operator will be able to tell you whether or not site-specific connection terms exist.** If you want to know the identity of your network operator, or want a copy of the NTC or have any questions about it, please write to: Energy Networks Association, 1st Floor, 4 More London Riverside, London, SE1 2AU: see the website at www.connectionterms.co.uk.

SCHEDULE 2B - NATIONAL TERMS OF CONNECTION

Version 21.0 effective from 22 January 2026

Section 1

A **Introduction:** The electricity that is supplied to, or exported from, the premises is conveyed using the network of the network operator. In order that electricity can be supplied to, or exported from, the premises, there must be both:

- a connection agreement with the network operator to maintain the connection to its network; and
- arrangements for the supply, or export, of electricity (usually with an electricity supplier).

The National Terms of Connection set out the terms and conditions that the network operator requires you to accept in return for maintaining the connection of the premises to its network.

B **Application to you and the premises:** These terms may apply to you in one of two ways:

- If you have entered into a contract with your electricity supplier for the supply of electricity to, or the export of electricity from, a particular premises, you will also have agreed with the network operator to accept these terms in respect of those premises. This is because your electricity supplier has been appointed as the agent of the network operator to make such an agreement.
- If you have not entered into any contract with your network operator in respect of a particular premise, but you are either the owner or occupier (or both the owner and occupier) of those premises, you are required to accept these terms pursuant to section 21 of the Electricity Act 1989 (and you will be taken to have accepted these terms unless and until your premises are permanently disconnected from the network or you agree different terms with your network operator).

C **Application to other premises:** If the National Terms of Connection apply to you and a particular premises in accordance with the first bullet point of paragraph B above, you also agree that the National Terms of Connection apply to any other connection of any other premises of which you are the owner or the occupier (or both the owner and the occupier).

D **Application of sections 2, 3 & 4:** The National Terms of Connection contain 4 sections. This Section 1 will always apply to you and the premises. In addition, one of Section 2, Section 3 or Section 4 will also apply to you and the premises, depending on the physical nature of the connection at the premises:

- if the connection is metered directly by putting the full electrical current through the meter (known as 'whole current metering'), Section 2 will apply (this is usually the case with domestic properties and small industrial and commercial properties);
- if the connection is to an unlicensed distribution system that does not have its own settlement meter at the boundary with the network but would most likely be metered with whole current metering if it was metered, then Section 2 will apply;
- if the connection is metered indirectly by using current transformers to induce a reference current which is then put through the meter (known as 'C/T metering'), Section 3 will apply (this is usually the case with large industrial and commercial properties);
- or if the connection is to an unlicensed distribution system that does not have its own settlement meter at the boundary with the network but would most likely be metered with C/T metering if it was metered, then Section 3 will apply; or
- if the network operator has agreed that the connection need not be metered (known as 'unmetered supply'), Section 4 will apply (this is usually the case with street lighting).

If you are not sure which of Section 2, Section 3 or Section 4 applies to the premises, or have any other questions about the National Terms of Connection, you should contact the network operator. Contact details

are available from the Energy Networks Association at www.connectionterms.co.uk.

E **Duration and replacement terms:** If the National Terms of Connection take effect under the first bullet point of paragraph B above, they will apply in respect of the premises from the time that the contract with your electricity supplier takes effect, and will continue (even if that contract ends) until either:

- another connection agreement takes effect in respect of the premises pursuant to another contract with an electricity supplier for the supply of electricity to, or the export of electricity from, the premises (as applicable); or
- the application of the National Terms of Connection is terminated, or otherwise ends, in accordance with section Section 2, Section 3 or Section 4 (as applicable), including where you agree a replacement agreement with the network operator.

F **Existing connection terms:** This paragraph F applies in the event that there are any existing terms governing the connection of the premises to the network (except for the standard terms set out in, Section 3 and Section 4, or any previous version of the terms set out in those sections). If you are party to the existing terms, then the existing terms shall apply instead of the National Terms of Connection (while the existing terms remain in effect). If you are not party to the existing terms and the premises are non-domestic premises to which Section 3 would otherwise apply, then the existing terms shall apply to you and the premises instead of Section 3. This is the only case in which the existing terms will be given effect via the National Terms of Connection. If existing terms are given effect in accordance with this paragraph F, you will have the benefit of the rights, and be bound by the obligations, under the existing terms from the date that the National Terms of Connection apply to you and the premises, as if you had entered into the existing agreement with the network operator on that date (until paragraph E above applies, or the existing terms are terminated in accordance with the provisions for termination in those terms). Confirmation of whether or not existing terms apply to the premises can be obtained from the network operator. Existing connection terms that apply to you and the premises in accordance with this paragraph F may (as compared to Section 3): place additional obligations on you in respect of how you can use the connection; increase your potential liability in respect of the connection; limit the ways and times that you can use the connection; include additional circumstances in which the network operator is able to declare the connection unavailable; and include restrictions and obligations that reflect the physical characteristics of the connection and/or other remote points on the network that are relevant to the connection.

G If we are contacted by any person purporting to be the owner and/or occupier of the premises (or purporting to be a prospective owner and/or occupier of the premises and who can show a reasonable cause for requiring the information), you agree that we shall be entitled to disclose to such person the following information relating to the premises: the maximum electrical capacity (import and/or export); and/or whether or not the connection is subject to any constraints.

H **Interpretation:** In this section, the term “premises” includes any land, building, structure, unlicensed distribution system (which includes, but is not limited to, systems owned by distribution exemption holders and unlicensed building network operators), or electrical installation, and is a reference to the premises to which these terms apply; the term “network” means, for each connection at the premises, the licensed electricity distribution network through which electricity is conveyed to, and from, that connection; and the term “network operator” means the licensed electricity distributor for the network.

I **Contacting your network operator:** Contact details for your network operator are available from the Energy Networks Association at www.connectionterms.co.uk.

Section 2

This Section 2 only applies to connections with 'whole current metering' or connections to unlicensed distribution systems that do not have their own settlement meters at the boundary with the network but would most likely be metered with whole current metering if they were metered - see paragraph D of Section 1.

1 *Interpretation.* In this Section 2, the term “this agreement” is a reference to the terms and conditions of Section 1 and Section 2 of the National Terms of Connection, which you have agreed to accept in respect of the premises (and there will be a separate agreement in respect of each premises). In addition, the terms “we”, “us” and “our” are references to the network operator, and the other terms used in this Section 2 shall have the same meaning as is given to them in Section 1.

2 *Connection to our network.* The premises will remain connected to our network in accordance with the provisions of the Electricity Act 1989, any other legal requirements that apply from time to time, and the terms of this agreement.

3 *Network constraints.* Our obligations under this agreement are subject to the maximum capacity and any other design feature of the connection. You must contact us in advance if you propose to make any significant change to the connection or to the electric lines or electrical equipment at the premises, or if you propose to do anything else that could affect our network or if you require alterations to the connection.

4 *Generating equipment.* If you install, or arrange for the installation of, small-scale generating equipment at the premises - which means one or more sources of electrical energy that have an aggregate rating of no greater than 16 amps per phase connected at low voltage - then you must inform us of your intention to use the source of energy in parallel with our network no later than 28 days after the equipment is commissioned. So long as you do this, you do not need our consent. However, if you intend to install or operate any other kind of generating equipment at the premises, you must contact us in advance and obtain our consent. You must ensure that any generating equipment at the premises complies with the applicable requirements of the distribution code that applies under our licence. Copies of the distribution code are available from the network operator on request.

5 *Providing information.* You must provide us with any information we request in relation to the nature, or use by you, of electrical equipment at the premises. We will only ask for information that we need in relation to this agreement or the distribution code that applies under our licence.

6 *Conveying electricity.* We do not guarantee that we will convey electricity through our network at all times, or that electricity delivered through our network will be free of brief variations in voltage or frequency.

7 *Cutting off the supply.* We may cut off the flow of electricity through the connection where we are entitled to do so under the general law. We may also cut off the flow of electricity where we are required to do so under a contract with an electricity supplier or because of the electricity industry arrangements under which we operate in accordance with our licence.

8 *Unauthorised use of our network.* This agreement entitles the premises to be connected to our network for the purpose of receiving electricity from, or exporting electricity to, our network. Any other use of our network, including the transmission of data or communications, is strictly prohibited unless with our prior written consent. Unless we have given such consent, any such use of our network by you, or relating to the connection, shall be a breach of this agreement, and you shall be liable for the losses we incur as a result, whether directly or indirectly.

9 *If something goes wrong.* If we fail to comply with any term of this agreement, or are negligent, you may be entitled under the general law to recover compensation from us for any loss you have suffered. However, we will not be required to compensate you for (and you should consider obtaining insurance against) loss caused by anything beyond our reasonable control, any indirect loss, or any direct or indirect economic or financial loss (including wasted expenses or any loss of revenue, profit, or interest, any loss of business, commercial, market, or economic opportunity, or any loss of contract or goodwill). This restriction does not apply where you are entitled to recover compensation for such loss under the general law in relation to death or personal injury resulting from negligence, or in relation to fraudulent misrepresentation.

10 *Business customers.* If the electricity supplied to the premises is used wholly or mainly for business purposes or the premises is an unlicensed distribution system, then our liability to you in relation to that premises, and your liability to us in relation to that premises, will (subject to the limitations in clause 9) be limited to a maximum of £100,000 per calendar year.

11 *Changing this connection agreement.* The terms of this agreement will be changed automatically to incorporate any changes which are approved by our regulator, the Gas and Electricity Markets Authority (GEMA). Notice of any change which is approved will be advertised in the national press, and the new terms will be published on the internet at www.connectionterms.co.uk

12 *Agreeing other connection terms.* You and we may each, at any time, ask the other to enter into an alternative connection agreement in respect of the connection if you or we believe an alternative agreement is needed because of the nature of the connection.

13 *Ending this agreement.* This agreement will end when one of the following occurs:

- you and we agree a replacement agreement in respect of the connection;
- the flow of electricity through the connection is permanently stopped; or
- any circumstances arise which legally entitle us to cut-off the electricity flow through the connection and we write to you advising you that this agreement is ended.

The ending of this agreement for any reason will not affect any rights, remedies or obligations which may have come into being under this agreement prior to its ending, and clauses 9 and 10 will continue to apply.

14 *Transferring this connection agreement.* You are not entitled to transfer this agreement to another person without our consent.

15 *Contacting each other.* We will generally contact you at the premises. Our contact details are available from the Energy Networks Association at www.connectionterms.co.uk.

16 *Governing law.* If the premises is located in Scotland (except where the network operator is Northern Powergrid (Northeast) plc (registered number 2906593) or Electricity North West Limited (registered number 2366949)), this agreement will be governed by, and interpreted in accordance with, Scots law, under the jurisdiction of the Scottish courts. In all other cases, this agreement will be governed by, and interpreted in accordance with, the laws of England and Wales, under the jurisdiction of the English and Welsh courts.

For information: supply characteristics

As required by law, the electricity delivered to the premises through our network will normally be at one of the voltages (and will have the technical characteristics) set out below:

- At 230 volts nominal alternating voltage: normally a single-phase supply, with a permitted range of voltage variation from plus 10% to minus 6%.

- At 400 volts nominal alternating voltage: normally a three-phase supply, with a permitted range of voltage variation from plus 10% to minus 6%.

At either of the above voltages: the supply frequency will be 50 hertz, with a permitted nominal variation of plus or minus 1%.

Section 3

This Section 3 only applies to connections with 'C/T metering'or connections to unlicensed distribution systems that do not have their own settlement meters at the boundary with the network but would most likely be metered with C/T metering if they were metered - see paragraph D of Section 1.

1. DEFINITIONS & INTERPRETATION

1.1 In this Section 3, except where the context otherwise requires, the following expressions shall have the meaning set out opposite them (and cognate expressions shall be construed accordingly):

Act	means the Electricity Act 1989.
Affiliate	means, in respect of a person, any company which is, from time to time, a subsidiary or holding company of that person or a subsidiary of any such holding company (and the terms “subsidiary” and “holding company” shall have the meanings given to them by section 1159 of the Companies Act 2006);
Agreement	means the terms and conditions of Sections 1 and 3 of the National Terms of Connection, which the Customer has agreed with the Company to accept in respect of the Connection Points;
Application for a Modification	means the Company's standard form for applying for a Modification, which is available from the Company on request;
Apparatus	means all equipment in which electrical conductors are used, supported or of which they may form part;
Authorised Persons	means persons authorised by the Company to undertake certain work on the Connection Equipment, the Metering Equipment and/or the Monitoring Equipment;
Authority	means the Gas and Electricity Markets Authority as established by section 1 of the Utilities Act 2000;
Balancing and Settlement Code or BSC	means the Balancing and Settlement Code maintained pursuant to the ESO Licence (including any and all subsidiary documents and procedures made under it);
Company	means the holder of the Electricity Distribution Licence which applies to the Distribution System through which electricity is conveyed to, and from, the Connection Point;
Company's Equipment	means the switchgear, metering or other equipment, lines or other parts of the Distribution System, and any other property or rights of the Company (including any Substation apparatus);
Company's Premises	means any land or buildings of the Company in which any of the Customer's Installation is to be installed or is, from time to time, situated;
Competent Authority	includes the Secretary of State, the Authority and any local or national agency, authority, court, department, inspectorate, minister, ministry, official or public or statutory person (whether autonomous or not) of (or of the government of) the United Kingdom or of the European Union, insofar (in each case) as it is acting within the limits of its proper authority;
Connect	means the installation of the Connection Equipment in such a way that (subject to Energisation) electricity may be imported to, and/or exported from, the Customer's Installation over the Distribution System at the Connection Point;
Connection Equipment	means that part of the Company's Equipment which has been provided and installed by the Company for the purposes of providing a connection at the Connection Point;
Connection Point	means the point or points of connection at which electricity may (upon Energisation) flow between the Distribution System and the Customer's Installation, and is (subject to Clause 2.4) a reference to the point or points of connection at the Premises to which this Agreement applies;
Connection and Use of System Code or CUSC	means the Connection and Use of System Code maintained pursuant to the ESO Licence (including the framework agreement by which it is made contractually binding, and any supplementary agreement made under it);
Customer	means the person, other than the Company, to whom this Agreement applies;
Customer's Installation	means any structures, equipment, lines, appliances or devices (not being the Company's Equipment) used, or to be used, at the Premises (whether or not owned or used by the Customer);
De-energisation	means the deliberate movement of any switch or the removal of any fuse or the taking of any other step whereby no electrical current can flow between the Distribution System and the Customer's Installation at the Connection Point (and “De-energise(d)” shall be construed accordingly);

DGNU Payment	means the compensation mechanism (the Distributed Generation Network Unavailability Payment) created by the Authority to make compensation payments for network outages experienced by customers with distributed generation;
Directive	includes any present or future directive, requirement, licence condition, instruction, direction or rule of any Competent Authority (but only, if not having the force of law, if compliance with the Directive is in accordance with the general practice of persons to whom the Directive is addressed) and includes any modification, extension or replacement thereof then in force;
Disconnection	means the permanent electrical disconnection of all or any of the Connection Equipment (and “Disconnect” shall be construed accordingly);
Disconnection Notice	means a notice sent by the Customer to the Company requesting that the Company Disconnect one or more of the Connection Points;
Distribution Code	means the distribution code established pursuant to the Company's Electricity Distribution Licence;
Distribution Connection and Use of System Agreement or DCUSA	means the Distribution Connection and Use of System Agreement established pursuant to the Electricity Distribution Licences;
Distribution System	has the meaning given to that expression in the Electricity Distribution Licences, and (unless the context otherwise requires) is a reference to the Company's Distribution System (as defined in the Company's Electricity Distribution Licence);
Electricity Distribution Licence	means an electricity distribution licence granted pursuant to section 6 (1) (c) of the Act;
Electricity Supplier	means a person who is the holder of a licence to supply electricity under section 6 of the Act, or who is exempted from the requirement to hold such a licence under section 5 of the Act;
ESO Licence	means a licence granted or treated as granted under section 6(1)(da) of the Act.
Energisation	means the movement of any switch or the insertion of any fuse or the taking of any other step so as to enable an electrical current to flow between the Distribution System and the Customer's Installation at the Connection Point (and “Energise(d)” shall be construed accordingly);
Force Majeure	means, in respect of a Party, any event or circumstance which is beyond the reasonable control of that Party and which results in or causes the failure of that Party to perform any of its obligations under this Agreement, which event of circumstance shall include: act of God, strike lockout or other industrial disturbance, act of the public enemy, war declared or undeclared, threat of war, terrorist act, blockade, revolution, riot, insurrection, civil commotion, public demonstration, sabotage, act of vandalism, lightning, fire, storm, flood, earthquake, accumulation of snow or ice, lack of water arising from weather or environmental problems, explosion, infrequent transient voltage variations (whether substantial or otherwise), and fault or failure of Plant and Apparatus (to the extent that any such event or circumstance could not have been prevented by Good Industry Practice); and shall also include: governmental restraint, any Act of Parliament, other legislation, or Directive (not being any order, regulation or direction under section 33, 34 or 35 of the Act); and (in respect of the Company) shall include: the failure of any generator or the ISOP to provide the Company with electricity (or any deficiency in the electricity provided) to the extent that such failure or deficiency or the consequences thereof could not have been prevented by the exercise of Good Industry Practice by the Company. Provided that a Party's lack of funds shall not be interpreted as a cause beyond that Party's reasonable control;
Generating Equipment	means any electricity generating unit;
Good Industry Practice	means the exercise of that degree of skill, diligence, prudence and foresight which would reasonably and ordinarily be expected from a skilled and experienced operator engaged in the same type of undertaking under the same or similar circumstances;
Grid Code	means the code of that name established pursuant to the NETSO Licence;
ISOP	means the Independent System Operator and Planner as designated by the Secretary of State under section 162 of the Energy Act 2023 as the holder of the ESO Licence.
kVA	means kilovoltamperes;
kW	means kilowatts;
Material Effect	means, in respect of a Party, an effect causing that Party to effect any works or to alter the manner of operation of the Company's Equipment or the Customer's Installation (as the case may be), which in either case involves that Party in expenditure of more than £1,000;
Maximum Export Capacity	means, in respect of a Connection Point (or the Connection Points collectively), the maximum amount of electricity (expressed in kW or kVA) which is permitted by the Company to flow into the Distribution System through the Connection Point (or the Connection Points collectively);
Maximum Import Capacity	means, in respect of a Connection Point (or the Connection Points collectively), the maximum amount of electricity (expressed in kW or kVA) which is permitted by the Company to flow from the Distribution System through the Connection Point (or the Connection Points collectively);
Meter	means a device that measures the flow of electricity;
Meter Operator Agent	has the meaning given to that expression in the BSC, and is (unless the context otherwise requires) a reference to the person appointed to that role in relation to the Metering System by the Registrant (or, where applicable, by the Customer);
Metering Equipment	means the equipment belonging to the Company and associated with the Metering, including any related current transformer, voltage transformer, and Metering Potential Fuses;
Metering Potential Fuses	means the fuses which control the voltage supply to the Metering;

Metering System	has the meaning given to that expression in the BSC, and is a reference (unless the context otherwise requires) to the BSC settlement Metering required by Clause 4.1.3;
Modification	means, in respect of a Party, any actual or proposed replacement, renovation, modification, alteration or construction by or on behalf of that Party to either that Party's Plant or Apparatus or the manner of its operation, which (in either case) has or will have a Material Effect on the other Party;
Modification Notification	means the Company's standard form of Modification notification from time to time applicable;
Modification Offer	means an offer by the Company to the Customer made pursuant to Clause 14 of terms for connection in relation to any proposed Modification at or affecting one or more of the Connection Points, including any revision or extension of such offer;
Monitoring Equipment	means any monitoring and metering equipment that may be used by the Company for the purposes of measuring or checking consumption otherwise than for settlement;
National Electricity Transmission System	shall have the meaning given to that expression in the CUSC;
National Terms of Connection	means these National Terms of Connection, of which this Section 3 forms part, as amended from time to time in accordance with Clause 22;
Party	means each of the Company and the Customer (and "Parties" shall be construed accordingly);
Plant	means fixed and movable items used in the generation, supply and/or distribution of electricity (other than Apparatus);
Power Factor	means the ratio of real power to apparent power;
Premises	includes any land, building, or structure, and (unless the context requires otherwise) is a reference to the premises to which this Agreement applies;
Property	means the Premises to which this Agreement applies, together with any other premises of the Customer in which the Company's Equipment is installed from time to time (or to which the Company may require access for the purpose of accessing the Company's Equipment);
Property Documents	means any and all of the agreements that create (or otherwise concern) property interests and/or rights (including all leases, wayleaves, easements, and servitudes) in favour of the Company, to which the Customer is also party or which relate to the Connection Equipment;
Re-energisation	means the movement of any switch or the installation of any fuse or the taking of any other step whereby electrical current can flow between the Distribution System and the Customer's Installation at the Connection Point (and "Re-energise(d)" shall be construed accordingly);
Registrant	means the person registered in accordance with the BSC as responsible for the Metering System (which may be the Customer, an Electricity Supplier, or any other party to the BSC);
Regulations	means the Electricity Safety, Quality and Continuity Regulations 2002, and/or the Electricity at Work Regulations 1989;
Small-Scale Generating Equipment	means one or more items of Generating Equipment that have an aggregate rating of no greater than 16 amps per phase connected at low voltage;
Substation	means an electricity substation (as defined in Regulation 1(5) of the Electricity Safety, Quality and Continuity Regulations 2002) of the Company;
System Outage	means the deliberate act by the Company, by whatever means it determines, to interrupt the flow of electrical current to a part or parts of its Distribution System, for the purposes of carrying on its activities; and
Working Day	has the meaning given to that term in section 64 of the Act.

1.2 In this Agreement, unless the context otherwise requires:

1.2.1 a reference to a "person" includes a reference to an individual, a body corporate, an association or a partnership;

1.2.2 a reference to the singular includes the plural (and vice versa), and to a gender includes every gender;

1.2.3 a reference to a "Section" is a reference to a section of the National Terms of Connection, and to a "Clause" is to a clause of this Section 3;

1.2.4 the headings are for ease of reference only and shall not affect its interpretation;

1.2.5 the words "include", "including" and "in particular" are to be construed without limitation to the generality of the preceding words;

1.2.6 a reference to any statute or statutory provision includes any subordinate legislation made under it, any provision which it has modified or re-enacted, and any provision which subsequently supersedes or re-enacts it (with or without modification);

1.2.7 a reference to any agreement, code, licence or other document is to such agreement, code, licence or other document as amended, supplemented, novated or replaced from time to time (and includes all subsidiary agreements entered into under it); and

1.2.8 the word “costs” shall include all overhead and financing charges, and a reasonable rate of return on the capital represented by such costs.

2. APPLICATION OF THIS AGREEMENT

2.1 The National Terms of Connection create separate legal agreements (each an Agreement) in respect of each Premises to which the National Terms of Connection apply.

2.2 Where, in respect of the Premises to which this Agreement applies, more than one legal entity falls within the definition of Customer, separate Agreements shall be created between the Company and each such Customer.

2.3 Where there is more than one Connection Point at the Premises to which this Agreement applies, and more than one Distribution System is used to convey electricity to, and from, the Connection Points, separate Agreements shall be created between the Customer and the Electricity Distribution Licence holder for each such Distribution System (each such Electricity Distribution Licence holder being the Company for the purposes of each such Agreement).

2.4 Where there is more than one point of connection at which electricity may (upon Energisation) flow between the Distribution System and the Customer's Installation, but one or more of those points of connection would ordinarily be subject to Section 2 (rather than this Section 3), this Agreement (and this Section 3) shall apply to all of those points of connection (which shall all be Connection Points).

3. THE CUSTOMER'S RIGHT TO BE (AND REMAIN) CONNECTED

3.1 This Agreement shall govern the terms upon which the Customer's Installation shall be entitled to be (and remain) Connected to the Distribution System.

3.2 The Customer's Installation will be, and remain, Connected to the Company's Distribution System in accordance with the provisions of the Act, any other legal requirements that apply from time to time, and the terms of this Agreement.

3.3 The right to be (and remain) Connected does not include the right to be (and remain) Energised.

4. THE CUSTOMER'S RIGHT TO BE (AND REMAIN) ENERGISED

4.1 The Customer's right to be (and remain) Energised is subject to the Company's right to De-energise the Connection Point in accordance with Clause 5, and is conditional upon:

4.1.1 the Customer having the ability to perform and comply with all of its obligations under this Agreement;

4.1.2 a Registrant being registered, in accordance with the BSC, as responsible for the Metering System;

4.1.3 the Customer ensuring that the Registrant for the Metering System from time to time is a party to the DCUSA and entitled to use of system rights under the DCUSA in respect of the Metering System;

4.1.4 BSC settlement Metering being installed, and a Meter Operator Agent being appointed, in accordance with the requirements of the BSC, in respect of either or both (A) the Connection Point; and/or (B) each and every point at which electricity may flow from or to the Customer's Installation;

4.1.5 where there is any Generating Equipment at the Premises, the Customer (or, if the Customer is not the owner or operator of the Generating Equipment, the owner or operator of the Generating Equipment):

A. not being within any category of person that is required in accordance with the provisions of the CUSC to be a party to the CUSC (or to be a party to any supplementary agreement under the CUSC); or
B. (to the extent that it is within any such category) being a party to the CUSC (and/or to the relevant supplementary agreement under the CUSC); and

4.1.6 where there is any Generating Equipment at the Premises, the Customer (or, if the Customer is not the owner or operator of the Generating Equipment, the owner or operator of the Generating Equipment) holding a licence to generate electricity under section 6 of the Act, or being exempted from the requirement to hold such a licence under section 5 of the Act.

4.2 The Customer represents and undertakes to the Company that, at the date this Agreement comes into effect and for so long as it remains in effect, all of the conditions set out in Clause 4.1 are (and will remain) satisfied. The Customer shall notify the Company as soon as reasonably practicable if any of the conditions in Clause 4.1 cease to be satisfied. The Customer shall indemnify the Company against all actions, proceedings, claims or demands brought or threatened against the Company as a result of any of the conditions set out in Clause 4.1 not being (or ceasing to be) satisfied.

4.3 This Agreement shall not give the Customer any right to:

4.3.1 receive a supply of electricity to the Premises;

4.3.2 sell electricity exported from the Premises; and/or

4.3.3 use the Distribution System for the purposes of providing a supply of electricity (or to otherwise have electricity transported through the Distribution System),

and the Company therefore makes no warranty to the Customer in relation thereto. In respect of each Metering System, the Registrant for the Metering System will (by virtue of being Registrant) have contracted for the matters outlined in Clauses 4.3.1 and 4.3.2 pursuant to the BSC, and must contract with the Company for the matters outlined in Clause 4.3.3 under and in accordance with the DCUSA. Where the Customer is the Registrant, it must contract separately with the Company for the matters outlined in Clause 4.3.3 under and in accordance with the DCUSA.

4.4 When the Connection Point is Energised in accordance with this Agreement, the characteristics of any supply of electricity delivered shall be subject to such variations as may be permitted by the Regulations.

The Company does not guarantee that the supply of electricity will be free from transient variations in voltage and frequency or voltage pulses or harmonic frequencies, and the Customer must take its own protective measures if it requires a higher standard of supply.

5. DE-ENERGISATION

Emergency De-energisation

5.1 If, in the reasonable opinion of:

5.1.1 the Company, the condition or manner of operation of the Customer's Installation or other equipment, and/or the condition or manner of operation of the Distribution System, poses an immediate threat of injury or material damage to any person or property (including the Customer's Installation, the Distribution System, the National Electricity Transmission System, and the electrical systems and installations connected (directly or indirectly) to the Distribution System and/or the National Electricity Transmission System), then the Company shall have the right to immediately De-energise the Connection Point if it is necessary or expedient to do so to avoid the occurrence of such injury or damage; or

5.1.2 the Customer, the condition or manner of operation of the Distribution System or the Connection Equipment poses an immediate threat of injury or material damage to any person or property (including the Customer's Installation), then the Customer shall have the right to safely De-energise the Customer's Installation if it is necessary or expedient to do so to avoid the occurrence of such injury or damage, and shall promptly afterwards inform the Company of the incident.

De-energisation on Request

5.2 The Company shall De-energise the Connection Point within a reasonable time (or, in circumstances of urgency, as soon as is reasonably practicable) after being instructed to do so by either the Customer or the Registrant. Where the instruction has been given by the Registrant, the Company need not give the Customer notice of the intention to De-energise.

De-energisation Generally

5.3 Where the circumstances referred to in Clause 5.1.1 exist but with the proviso that the threat is not immediate, the Company may nevertheless De-energise the Connection Point, in which case the Company shall give the Customer as much advance notice of the De-energisation as is reasonably practicable in the circumstances.

5.4 The Company may De-energise the Connection Point pursuant to the Regulations, in which case the De-energisation shall be undertaken in accordance with any applicable requirements under the Regulations.

5.5 The Company may De-energise the Connection Point:

5.5.1 if it is necessary or reasonable for the Company to do so as part of a System Outage carried out in accordance with its statutory rights and obligations and Good Industry Practice; and

5.5.2 in order to permit other persons to connect to the Distribution System,

in which case, the Company shall give the Customer such notice of the De-Energisation as is required by law (and shall use its reasonable endeavours to provide as long a notice as is practicable).

5.6 The Company may, at any time without the need to give prior notice to the Customer, De-energise the Connection Point if:

5.6.1 the Company is instructed or required to do so pursuant to the Act, its Electricity Distribution Licence, any Directive, the CUSC, the BSC, the DCUSA and/or the Electricity Supply Emergency Code (being the code of that name designated by the Secretary of State);

5.6.2 the Company reasonably considers it necessary to do so for safety reasons or for the security of the Distribution System or any other electrical system (including in order to avoid interference with the regularity or efficiency of the Distribution System);

5.6.3 the Company reasonably believes that the Customer has made unauthorised use of electricity or committed theft of electricity;

5.6.4 if any of the conditions in Clause 4.1 cease to be satisfied, or the Customer breaches any of the provisions of this Agreement (including Clauses 10, 12.3, 13 and 16);

5.6.5 the Customer's acts, omissions and/or continued Connection cause the Company to breach this Agreement or any law or Directive;

5.6.6 the Company is entitled to De-energise the Connection Point in accordance with any other connection agreement relating to that Connection Point (provided the Company acts reasonably in exercising such right); and/or

5.6.7 the Company is otherwise permitted to do so under the provisions of this Agreement (including under Clause 7.5).

Miscellaneous

5.7 If the Company De-energises the Connection Point at the request of the Customer, or as a result of the acts, omissions or breaches of the Customer, then the Customer shall pay to the Company on demand any costs incurred by the Company as a result of such De-energisation and any subsequent Re-energisation.

5.8 If the Company De-energises the Connection Point at the request of the Customer, the Company shall Re-energise the Connection Point as soon as reasonably practicable after being instructed to do so by the Customer or the Registrant. If the Company De-energises the Connection Point at the request of the Registrant, the Company shall Re-energise the Connection Point as soon as reasonably practicable after being instructed to do so by the Registrant.

5.9 Where the Connection Point is De-energised otherwise than pursuant to Clause 5.2, the Company shall Re-energise the Connection Point as quickly as reasonably practicable after the circumstances leading to the De-energisation have ceased to exist.

5.10 In undertaking work relating to Energisation, De-energisation and any subsequent Re-energisation, the Company shall act in accordance with Good Industry Practice (and, subject thereto, shall decide on the extent and nature of the work required).

5.11 If at any time when the Customer does not have a right for a Connection Point to be (and remain) Energised but electricity is nevertheless imported from, or exported to, the Distribution System through that Connection Point, then the Customer shall (to the extent the Company is unable to recover the relevant amounts from the Registrant) pay to the Company forthwith upon demand such sum as the Company may require for such

import or export calculated in accordance with the Company's then current charges, together with such other reasonable and proper costs, losses and expenses as the Company may incur as a result thereof.

6. DISCONNECTION

6.1 The Customer shall be entitled to send to the Company a Disconnection Notice providing an explanation for why there is no reasonably foreseeable future use for the Connection Point, and specifying the date on which the Disconnection is required.

6.2 Unless the Company reasonably considers that it is not permitted to Disconnect the Connection point in accordance with the Act or the Electricity Distribution Licence, and unless agreed otherwise following the receipt of a Disconnection Notice in accordance with Clause 6.1, the Company shall (on, or as soon as reasonably practicable after, the date specified in the Disconnection Notice) remove the Connection Equipment from the Property. The Customer acknowledges that it may not be practicable to remove the equipment on the date specified, or for some time thereafter. The Customer shall pay to the Company forthwith upon demand an amount equal to the reasonable costs and expenses incurred by the Company in removing the Connection Equipment.

6.3 The Company shall be entitled to Disconnect the Connection Point where it is permitted to do so in accordance with the Act or the Electricity Distribution Licence (including if the Company reasonably considers it necessary to do so for safety reasons). Where such safety reasons were the result of the Customer's acts or omissions, the Customer shall pay to the Company forthwith upon demand an amount equal to the reasonable costs and expenses incurred by the Company in undertaking the Disconnection.

7. THE CUSTOMER'S INSTALLATION AND EQUIPMENT

Equipment Generally

7.1 The Customer shall ensure compliance at all times with the Regulations and any laws or Directives in respect of the Customer's Installation which are binding on the Customer and/or other occupiers of the Premises.

7.2 Save where express written representations are made by the Company, neither by inspection (if any) or non-rejection (nor in any other way) does the Company give any warranty (express or implied) as to the adequacy, safety, or other characteristics of the Customer's Installation, and the Company shall not be responsible thereof.

7.3 The Customer hereby acknowledges that the Company may use switchgear with auto-reclosing facilities, that the Customer's Installation should be designed and built so as not to suffer damage through the operation of such facilities and that the Company accepts no liability for such damage (subject to Clause 15.3) to the extent (if any) such damage is attributable to the Customer's failure to so design and build the Customer's Installation.

7.4 The Customer shall maintain the Customer's Installation so that it is reasonably fit for the purpose for which it is used, and so that neither it nor its operation or use shall be liable to cause damage to, or interference with, the Distribution System or the National Electricity Transmission System (or their operation or use or the flow of electricity through them).

7.5 If electricity is imported from, and/or exported to, the Distribution System via the Connection Point in a manner which adversely affects or impairs voltage regulation or impairs the flow of electricity through the

Distribution System (or in the reasonable opinion of the Company is likely to do so), then the Customer shall at its own expense remedy the condition in a manner deemed adequate in the reasonable opinion of the Company (and, if the condition is not remedied within a reasonable time of the Company giving notice to the Customer of such condition, the Company may forthwith De-energise the Connection Point until such condition has been so remedied), and pay to the Company on demand the full amounts of all costs, losses and expenses caused to the Company thereby.

7.6 Where there is more than one Connection Point, the Customer shall (at its own expense) ensure that there does not exist within the Customer's Installation the facility to parallel across more than one Connection Point, unless expressly agreed in writing by the Company.

Generating Equipment

7.7 If the Customer installs, or arranges or permits the installation of, Small-Scale Generating Equipment at the Premises, then the Customer must inform the Company of any intention to use the generating equipment in parallel with the Distribution System no later than 20 Working Days after the equipment is commissioned. Provided the Customer so informs the Company, the Customer does not need the Company's consent to install and/or operate Small-Scale Generating Equipment at the Premises.

7.8 Subject to Clause 7.7, the Customer shall notify the Company of any Generating Equipment at the Premises, and shall obtain the Company's prior written consent to the installation and/or operation of any Generating Equipment at the Premises capable of being operated in parallel with the Distribution System.

7.9 Where there is Generating Equipment at the Premises that is used as an emergency back-up source of electricity, it may be utilised provided that it is first isolated from the Distribution System.

8. THE COMPANY'S INSTALLATION AND EQUIPMENT

8.1 Only Authorised Persons will be allowed to operate the Company's Equipment, the Metering Equipment and/or the Monitoring Equipment (including for the purposes of connecting any Metering to the Metering Equipment), and shall only do so in accordance with Good Industry Practice.

8.2 The Customer shall allow the Company (at the Company's expense) to install Monitoring Equipment at the Connection Point if the Company considers it necessary to do so. Any such Monitoring Equipment will be independent of (and additional to) any Metering at the Connection Point, and shall remain the Company's property.

8.3 This Agreement entitles the Customer's Installation to be Connected for the purpose of receiving electricity from, or exporting electricity to, the Distribution System. Any other use of the Distribution System, including the transmission of data or communications, is strictly prohibited without the prior written consent of the Company. Unless the Company has given such consent, any such use of the Distribution System by the Customer, or relating to the Connection Point, shall be a breach of this Agreement, and the Customer shall pay to the Company on demand the full amount of all costs, losses and expenses caused to the Company as a result of such use.

9. PLANT AND APPARATUS

Prohibition on Interference

9.1 Each Party shall ensure that its agents, employees and invitees (including, in the case of the Customer, tenants, licensees and other occupiers of the Premises) do not interfere in any way with any of the Plant or Apparatus of the other Party without the consent of such other Party, except where emergency action has to be taken to protect the health and safety of persons or to prevent material damage to property. Neither Party shall knowingly do (or omit to do) anything which would cause the other Party to breach the Regulations.

9.2 Subject to Clause 15.2, if either Party breaches Clause 9.1 and as a result any equipment is lost or damaged, the Party in breach shall pay the other Party the amount of any loss, damage and expenses the other Party suffers as a result, unless such loss or damage was caused by fair wear and tear or Force Majeure.

Damage

9.3 The Customer shall at all times take reasonable precautions required to protect the Company's Equipment from damage, and for that purpose shall comply with any reasonable requirements made by the Company from time to time.

9.4 Each Party shall as soon as it becomes aware of the same notify the other Party in writing of any damage to any part of such other Party's equipment (being the Customer's Installation or the Company's Equipment) and shall provide in writing to such other Party (as soon as reasonably possible after the other Party has requested the same) such information relating to the incident giving rise to such damage as the first Party has in its possession, under its control or can obtain on exercising reasonable efforts.

9.5 Where the Company's Equipment is contained within, or adjacent to and directly associated with, the Customer's Installation, the Customer shall be liable for the replacement of any Company's Equipment which has been damaged and which arises from damage to the Customer's Installation; provided that the Customer's liability in respect of the Company's Equipment pursuant to this Clause 9.5 shall not exceed £1,000,000 per incident or series of related incidents.

10. PROPERTY RIGHTS & ACCOMODATION

10.1 The Customer shall ensure that the Company is at all times entitled (without cost to it) to:

10.1.1 occupy the Property for the purpose of Connecting the Premises (or for the purpose of Connecting the Premises and providing a connection to any other premises);

10.1.2 exercise its rights created by (or under) the Property Documents; and

10.1.3 upon the expiry or termination of such rights and for so long thereafter as the Premises requires a Connection (whether before or after the termination of this Agreement), exercise such rights upon the same terms as were contained in the Property Documents.

10.2 The Customer shall provide or procure the provision of (at its own expense) such building or other suitable accommodation or facilities as the Company may reasonably require for any of the Company's Equipment, the Metering Equipment and/or the Monitoring Equipment situated at the Property, and the Customer shall (at its own expense) ensure that such accommodation or facilities are kept in good and safe repair and condition (including that they are water tight).

10.3 Where applicable the Customer shall grant free of charge (or procure the grant free of charge by the freehold or leasehold owner as the case may be of the Property) to the Company a lease relating to the accommodation referred to in Clause 10.2, and the Customer shall obtain (or procure the obtaining of) all

consents (including any mortgagees, landlords or statutory consents) of any kind necessary to enable such a lease to be validly granted.

10.4 If the lease referred to in Clause 10.3 is not granted, or is terminated forfeited or surrendered (other than by replacement by a substitute lease), then the Company may terminate this Agreement by notice in writing to this effect to the Customer.

10.5 The Company shall not be liable for any breach of this Agreement arising as a result of, or caused by, any breach of the lease referred to in Clause 10.3 by the landlord to it, or any failure by the Customer to comply with its obligation at Clause 10.2 to keep the accommodation in good repair and water tight condition.

11. RIGHTS OF ACCESS

11.1 The Customer shall procure that the Company (and its employees, agents, sub-contractors and/or invitees) shall at all times be given safe and unobstructed access to enter the Property at convenient times (except in the case of emergency, in which case access is permitted at any time) and upon reasonable notice (except in the case of emergency or the reading of Monitoring Equipment, in which case no such notice need be given) for the purpose of exercising the Company's rights, or enforcing the Company's obligations, under this Agreement (and, in particular, for the purposes of: carrying out Connection, Modification, Energisation, De-energisation, and Re-energisation works; installing, inspecting, testing, repairing, renewing, maintaining, isolating, protecting or removing the Company's Equipment, the Metering Equipment and/or the Monitoring Equipment (or any part thereof); and/or otherwise operating the Distribution System). The provisions as to rights of access specified in paragraphs 7 to 10 of Schedule 6 to the Act shall apply to this Agreement. The Company shall ensure that any individuals to whom access is given pursuant to this Clause 11.1 shall comply with all reasonable directions given by the Customer (and its appropriately authorised representatives) as to general safety and site security requirements.

11.2 The Company shall procure that the Customer (and its employees, agents, sub-contractors and/or invitees) shall at all times (subject to suitable supervision by representatives of the Company) be given safe and unobstructed access to enter the Company's Premises at convenient times and upon reasonable notice for the purpose of exercising the Customer's rights, or enforcing the Customer's obligations, under this Agreement (and, in particular, for the purposes of: inspecting, testing, repairing, renewing, maintaining, isolating, protecting or removing the Customer's Installation and/or the Metering (or any part thereof)). The Customer shall ensure that any individuals to whom access is given pursuant to this Clause 11.2 shall comply with all reasonable directions given by the Company (and its appropriately authorised representatives) as to general safety and site security requirements.

12. LIMITATION OF CAPACITY

12.1 The Company shall only be obliged to allow the import of electricity from, and/or the export of electricity to, the Distribution System through the Connection Point at levels equal to or below the Maximum Import Capacity and/or the Maximum Export Capacity (respectively).

12.2 Subject to the other provisions of this Agreement, the Company shall use reasonable endeavours to:

12.2.1 ensure that the Maximum Import Capacity and the Maximum Export Capacity is available at the Connection Point at all times during the period of this Agreement; and

12.2.2 maintain the connection characteristics at the Connection Point.

Exceeding Capacities

12.3 The Customer shall ensure that the import of electricity from, and/or the export of electricity to, the Distribution System through the Connection Point does not (at any time) exceed the Maximum Import Capacity and/or the Maximum Export Capacity (respectively). Where the Customer is unsure of the Maximum Import Capacity and/or the Maximum Export Capacity, it shall contact the Company (and the Company will inform the Customer of the applicable capacities).

12.4 On each occasion that the Customer breaches Clause 12.3 (and without prejudice to the Company's other rights and remedies, including under Clause 5), the Company may serve a written notice on the Customer specifying the circumstances of the breach and the courses of action available to the Customer under Clauses 12.5.1 to 12.5.3.

12.5 The Customer shall, on receipt of such a written notice (or, where the Customer disputes the content of the notice in accordance with Clause 12.6, following resolution of such dispute in favour of the Company), take the necessary actions to reduce the import and/or export of electricity to within the Maximum Import Capacity and/or the Maximum Export Capacity within the period of time specified in the notice; and within 30 Working Days after such notice or resolution:

12.5.1 propose a variation to the Maximum Import Capacity and/or the Maximum Export Capacity in accordance with Clause 12.12; or

12.5.2 provide the Company with an explanation as to why the Customer does not wish to submit a variation at this time; or.

12.5.3 propose to the Company an alternative timescale for the Customer to take one of the courses of action referred to in Clause 12.5.1 or Clause 12.5.2, such timescale to be subject to the Company's approval (such approval not to be unreasonably withheld or delayed); or

12.5.4 propose that an alternative connection agreement is entered into pursuant to Clause 22.2.

12.6 If the Customer disputes the Maximum Import Capacity and/or Maximum Export Capacity (as applicable) specified in the notice given by the Company under Clause 12.4 (or otherwise disputes that a breach of Clause 12.3 has occurred), the Customer and the Company shall attempt to resolve the dispute in good faith. Where the dispute remains unresolved after 20 Working Days, the provisions of Clause 21 shall apply.

12.7 Without prejudice to the Company's other rights and remedies, including under Clause 5), where the Customer:

12.7.1 fails to reduce the import and/or export of electricity to within the Maximum Import Capacity and/or the Maximum Export Capacity in accordance with Clause 12.5; or

12.7.2 proposes a variation pursuant to Clause 12.5.1, but no variation is agreed within a reasonable period thereafter (save where the variation has been referred to the Authority and pending determination by the Authority); or

12.7.3 provides an explanation referred to in Clause 12.5.2, but the Customer continually or repeatedly breaches Clause 12.3; or

12.7.4 proposes an alternative timescale pursuant to Clause 12.5.3, but that timescale is rejected by the Company (acting reasonably) or the Customer fails to comply with the alternative timescale,

then Clause 12.8 shall apply.

12.8 Where this Clause 12.8 applies (as described in Clause 12.7), then the Company shall be entitled to:

12.8.1 propose a variation to the Maximum Import Capacity and/or the Maximum Export Capacity (as applicable) in accordance with Clause 12.12; or

12.8.2 provide the Customer with a Modification Offer as if the Customer had submitted an Application for a Modification requesting a Modification incorporating an increase in the Maximum Import Capacity and/or the Maximum Export Capacity (as applicable).

12.9 Not Used.

12.10 Where a variation or Modification Offer under Clause 12.8 has not been accepted in accordance with its terms (save where such variation or Modification Offer has been referred to the Authority and pending determination by the Authority), then the Company may install additional equipment at the Connection Point designed to limit the import and/or export of electricity from or to the Distribution System to an amount equal to the Maximum Import Capacity and/or the Maximum Export Capacity (as applicable).

12.11 Provided (and to the extent) the installation of additional equipment in accordance with Clause 12.10 is reasonably necessary to prevent danger or interference with the Distribution System or to avoid costs being borne by the Company or another customer in the case of future breaches of Clause 12.3, the Customer shall pay to the Company forthwith upon demand an amount equal to the reasonable costs and expenses incurred by the Company in installing and maintaining such equipment.

12.11A If at any time the Connection Point is De-energised for a continuous period exceeding 6 months, then the Company may (at any time thereafter while the Connection Point is De-energised, and having due regard to all the circumstances) give notice to the Customer that it considers that the connection is no longer required and request that the Customer responds in writing within 30 Working Days. Such notice must refer to the Company's right to Disconnect the Connection Point if it is not reasonable in all the circumstances for the Company to maintain it.

12.11B Where the Company (having taken into account any representations and alternative proposals received from the Customer within the period referred to in Clause 12.11A) reasonably considers that the Company is not required under the Act to maintain the connection in respect of the Premises, then the Company may (save where the Customer has referred the matter to the Authority pursuant to the Act, and pending determination by the Authority) give notice to the Customer in compliance with section 17(3) of the Act and thereafter Disconnect the Connection Point thereby terminating this Agreement.

12.11C If the import of electricity from and/or export of electricity to the Distribution System through the Connection Point does not, at any time during any period of 12 consecutive months, exceed 75% of the Maximum Import Capacity and/or of the Maximum Export Capacity (respectively), then the Company may (at any time during the following month, and having due regard to all the circumstances):

12.11C.1 notify the Customer that the Company proposes to vary this Agreement in accordance with Clause 12.12; or

12.11C.2 provide the Customer with a Modification Notification incorporating a reduction in the Maximum Import Capacity or Maximum Export Capacity (as applicable), and Clause 14 shall apply,

the reduction being (in each case) to such amount as the Company reasonably considers to be appropriate (being not less than the import of electricity and/or export of electricity through the Connection Point at any time during such 12-month period). For the avoidance of doubt, neither the variation under Clause 12.11C.1 nor the modification under Clause 12.11C.2 are binding unless and until otherwise agreed or determined pursuant to Clause 12.12 or 14 (as applicable).

General

12.12 Except where a variation requires a Modification, either Party may propose a variation to the Maximum Import Capacity and/or Maximum Export Capacity by notice in writing to the other Party. The Company and the Customer shall negotiate in good faith such a variation, but where it is not agreed section 23 of the Act may entitle either Party to refer the matter to the Authority.

12.13 Any reduction in the Maximum Import Capacity or the Maximum Export Capacity pursuant to Clause 12.12 shall, where the Parties have within the preceding 12 months agreed the Maximum Import Capacity or the Maximum Export Capacity (as applicable), only take effect following the expiry of 12 months from the date of such previous agreement (unless the Company expressly agrees otherwise).

12.13A No reduction in the Maximum Import Capacity or the Maximum Export Capacity pursuant to Clause 12.12 shall have effect prior to the first day of the month following the date of the notice properly given under Clause 12.12, stating the required capacity (being, if the reduction initially requested is not agreed, the request for the reduction which is subsequently agreed).

12.13B Where Part 4 of Schedule 16 of the DCUSA applies to the Premises (and unless and until the Parties agree a different capacity), the Maximum Import Capacity determined under such Part 4 shall apply for the purposes of this Agreement (and the Company shall have no liability to the Customer should that capacity not be suitable and/or have an impact on the Connection Assets).

12.14 For the avoidance of doubt, all notices under this Clause 12 shall be sent, and shall be deemed to be served and received, in accordance with Clause 23.

13. POWER FACTOR AND PHASE BALANCE

13.1 Unless otherwise agreed, the Customer shall at all times ensure that the Power Factor of any import of electricity from, or export of electricity to, the Distribution System through the Connection Point is maintained:

13.1.1 (unless otherwise required by the Company for operational reasons) so that there is never a leading Power Factor; and

13.1.2 (subject to Clause 13.1.1) at or as near to unity as practicable, but in any case no less than 0.95 lagging.

13.2 The Customer shall not allow the Power Factor at the Connection Point to vary such as to cause damage or disturbance to the Distribution System.

13.3 Where connection at the Connection Point is provided through two or more phases, the Customer shall ensure (insofar as is reasonably practicable) that the flow of electricity through the Connection Point is at all times balanced between the phases.

13.4 If the Customer fails to comply with Clause 13.1, 13.2 or 13.3 the Company may in its reasonable discretion and having given such notice as it considers reasonable in the circumstances De-energise the Connection Point until the causes of the failure are remedied. If the Customer is unable to remedy the situation within a reasonable time, the Company may require a Modification to be made to the Company's Equipment and/or the Customer's Installation.

14. MODIFICATIONS

14.1 No Modification may be made by or on behalf of either Party otherwise than in accordance with the provisions of this Clause 14.

14.2 Where the Customer wishes to make a Modification it shall complete and submit to the Company an Application for a Modification.

14.3 The Company shall make a Modification Offer to the Customer as soon as reasonably practicable and in accordance with the requirements of its Electricity Distribution Licence. The Parties shall discuss in good faith the implications of the proposed Modification(s).

14.4 The Modification Offer made by the Company in response to the application will be open for acceptance in accordance with its terms, unless either the Company or the Customer makes an application for determination to the Authority under the Company's Electricity Distribution Licence in which event the Modification Offer shall remain open for acceptance until the date 10 Working Days after the determination by the Authority pursuant to such application. If the Modification Offer is accepted by the Customer, this Agreement shall be varied to reflect the terms of the Modification Offer and the Modification shall proceed according to the terms of this Agreement as varied.

14.5 Where the Company wishes to make a Modification to the Distribution System the Company shall complete and submit to the Customer a Modification Notification and shall advise the Customer of any works which the Company reasonably believes the Customer may have to carry out as a result.

14.6 The Customer may as soon as practicable after receipt of the Modification Notification and (save where the Authority consents to a longer period) within the period stated therein (which shall be sufficient to enable the Customer to assess the implications of the proposed Modification) make an application to the Authority under the Company's Electricity Distribution Licence.

14.7 As soon as practicable after the receipt of the Modification Notification or, if an application to the Authority has been made, the determination by the Authority, and in any event within 2 months thereof, the Customer shall submit an Application for a Modification to the Company.

14.8 Once an Application for a Modification has been made by the Customer pursuant to Clause 14.7 the provisions of Clauses 14.3 and 14.4 shall thereafter apply.

14.9 Subject to the payment of its reasonable charges (if any) as referred to in this Clause 14.9, the Company undertakes to the Customer to provide all advice and assistance reasonably requested by the Customer to enable the Customer adequately to assess the implications including the feasibility of making a Modification to the Customer's Installation (whether such Modification is to be made at the request of the Company or of the Customer). The charges referred to in this Clause 14.9 are:

14.9.1 if the proposed Modification by the Customer is or may be required as a result of a Modification proposed by the Company, then the Company shall provide such advice and assistance free of

charge; or

14.9.2 if the proposed Modification is or may be proposed by the Customer, the Company may charge the Customer such amount as is reasonable in all the circumstances for such advice and assistance.

14.10 The provisions of such advice and assistance shall be subject to any confidentiality obligations binding on the Parties.

14.11 The Company shall have no obligation to compensate the Customer for the cost and expenses incurred by the Customer as a result of any Modification by the Company.

15. LIMITATION OF LIABILITY

15.1 Neither Party shall be liable for any breach of this Agreement directly or indirectly caused by Force Majeure.

15.2 Subject to Clause 15.3 and save where any provisions of this Agreement provide for an indemnity, neither Party (the “Party Liable”) nor any of its officers, employees or agents shall be liable to the other Party for any loss arising under or in relation to this Agreement (whether for breach of this Agreement, in tort or otherwise) other than for loss directly resulting from a breach of this Agreement and which at the date hereof was reasonably foreseeable as not unlikely to occur in the ordinary course of events from such breach in respect of:

15.2.1 physical damage to the property of the other Party, its officers, employees or agents; and/or

15.2.2 the liability of such other Party to any other person for loss in respect of physical damage to the property of any person,

provided that:

15.2.3 the liability of either Party in respect of claims for such loss shall in no circumstance exceed one million pounds (£1,000,000) per incident or series of related incidents;

15.2.4 where such incident or series of related incidents entitles the Customer to claim compensation from the Company under this Agreement and any other agreement (including any other connection agreement), the Company's aggregate liability under this Agreement and all such other agreements in respect of that incident or series of related incidents shall not exceed one million pounds (£1,000,000), irrespective of whether the Customer has claimed under this Agreement and/or any such other agreement; and

15.2.5 where such incident or series of related incidents entitles any person other than the Customer to claim compensation from the Company under a connection agreement relating to the Premises, the Company's aggregate liability under this Agreement and all such other connection agreements in respect of that incident or series of related incidents shall not exceed one million pounds (£1,000,000), and the Company's liability under this Agreement will be pro-rated accordingly.

15.3 Nothing in this Agreement shall exclude or limit the liability of the Party Liable for death or personal injury resulting from the negligence of the Party Liable, or any of its officers, employees or agents and the Party Liable shall indemnify and keep indemnified the other Party, its officers, employees or agents from and against all such and any loss or liability which such other Party may suffer or incur by reason of any claim on

account of death or personal injury resulting from the negligence of the Party Liable, or any of its officers, employees or agents.

15.4 Subject to Clause 15.3, neither Party, nor any of its officers, employees or agents shall in any circumstances whatsoever be liable to the other Party for any:

15.4.1 loss of profit, loss of revenue, loss of use, loss of contract or loss of goodwill;

15.4.2 indirect or consequential loss; or

15.4.3 loss resulting from the liability of such other Party to any other person however and whenever arising except under Clause 15.2.2,

and, for the avoidance of doubt, the Company shall have no liability to the Customer to pay to any person the DGNU Payment unless by prior agreement in writing.

15.5 The rights and remedies provided by this Agreement to the Parties are exclusive and not cumulative and exclude and are in place of all substantive (but not procedural) rights or remedies express or implied and provided by common law or statute in respect of the subject matter of this Agreement, including without limitation any rights either Party may possess in tort which shall include without limitation actions brought in negligence and/or nuisance. Accordingly, each Party hereby waives to the fullest extent possible all such rights and remedies provided by common law or statute, and releases the Company to the same extent from all duties, liabilities, responsibilities or obligations provided by common law or statute in respect of the matters dealt with in this Agreement and undertakes not to enforce any of the same except as expressly provided herein.

15.6 Save as otherwise expressly provided in this Agreement, this Clause 15 insofar as it excludes or limits liability shall override any other provision of this Agreement, provided that nothing in this Clause 15 shall exclude or restrict or otherwise prejudice or affect any of:

15.6.1 the rights, powers, duties and obligations of either Party which are conferred or created by the Act, (or any subordinate legislation made under it), the Electricity Distribution Licence, or the Regulations; or

15.6.2 the rights, powers, duties and obligations of the Authority or the Secretary of State under the Act, the Electricity Distribution Licence or otherwise howsoever.

15.7 Each of the Clauses of this Clause 15 shall:

15.7.1 be construed as a separate and severable contract term, and if one or more of such Clauses is held to be invalid, unlawful or otherwise unenforceable the other or others of such Clauses shall remain in full force and effect and shall continue to bind the Parties; and

15.7.2 survive termination of this Agreement.

15.8 Each of the Parties agrees that the other Party holds the benefit of Clauses 15.2 and 15.3 for itself and as trustee and agent for its officers, employees and agents.

15.9 Nothing in this Clause 15 shall be construed so as to prevent the Company from bringing an action in debt against the Customer.

16. DISTRIBUTION CODE

16.1 Each Party undertakes to comply with all the provisions of the Distribution Code applicable to it.

16.2 In the event of any conflict between this Agreement and the Distribution Code, the Distribution Code shall prevail.

17. PAYMENTS

17.1 Unless otherwise stated, each Party shall pay any and all amounts due to the other Party under this Agreement within 30 days of the date of invoice.

17.2 If any amount owing by one Party to the other under the terms of this Agreement remains unpaid after the due date for payment, the Party to whom the amount is owed shall be entitled to recover interest thereon at the rate provided for by the Late Payment of Commercial Debts (Interest) Act 1998. The Party to whom the amount is owed shall also be entitled to recover the fixed sum provided for by that Act.

17.3 All amounts payable under this Agreement are exclusive of value added tax and value added tax may be added at the applicable rate.

18. ASSIGNMENT AND SUB-CONTRACTING

18.1 Subject to Clauses 18.2, 18.3 and 18.4, neither Party shall assign (or otherwise transfer) its benefit or burden under this Agreement without the prior written consent of the other Party, such consent not to be unreasonably withheld or delayed.

18.2 Either Party may assign or charge its benefit under this Agreement in whole or in part by way of security.

18.3 The Company shall be entitled, without the consent of the Customer, to assign its rights and/or obligations under this Agreement, whether in whole or in part, where such assignment is to an Affiliate.

18.4 Either Party shall be entitled, without the consent of the other Party, to sub-contract its obligations under this Agreement. The sub-contracting by the Company or the Customer of the performance of any obligations or duties under this Agreement or of any activities envisaged by the Distribution Code shall not relieve the Company or the Customer (as the case may be) from liability for the performance (or non-performance) of such obligation or duty.

19. EVENTS OF DEFAULT AND TERMINATION

Automatic Termination

19.1 This Agreement will automatically terminate in respect of a Connection Point where one or more of the following occurs:

19.1.1 the Customer and the Company agree a replacement connection agreement in respect of the Connection Point; or

19.1.2 the Connection Point is Disconnected.

Termination on notice

19.2 Either Party may terminate this Agreement by giving the other not less than one month's notice in writing; provided that the Company may not give such notice for so long as it is required to offer terms for connection in respect of the Premises pursuant to the Act.

Termination for breach or financial difficulty

19.3 The Company may immediately terminate this Agreement by giving notice of such termination to the Customer in the event that one or more of the following occurs (and is continuing):

19.3.1 the Customer fails to pay any amount properly due and owing to the Company pursuant to this Agreement, and such failure is not remedied within 5 Working Days of receiving written notice from the Company of the occurrence thereof and requiring the same to be remedied;

19.3.2 the Customer fails in any material respect to perform or comply with any of its obligations under this Agreement, and (only if the breach is capable of remedy) it is not remedied to the reasonable satisfaction of the Company within 20 Working Days of receiving written notice from the Company of the occurrence thereof and requiring the same to be remedied; or

19.3.3 any of the following occurs:

A. an interim order or bankruptcy order is made in respect of the Customer under the Insolvency Act 1986 or a voluntary arrangement is proposed in respect of the Customer;
B. an order of the High Court is made or an effective resolution passed for the insolvent winding-up or dissolution of the Customer;
C. a receiver (which expression shall include an administrative receiver within the meaning of section 29 of the Insolvency Act 1986) of the whole or any material part of the assets or undertaking of the Customer is appointed;
D. an administration order under section 8 of the Insolvency Act 1986 is made or if a voluntary arrangement is proposed under section 1 of that Act in respect of the Customer; or
E. the Customer enters into any scheme of arrangement (other than for the purpose of reconstruction or amalgamation upon terms previously approved in writing by the Company); or
F. the Customer is unable to pay its debts (within the meaning of section 123(1) or (2) of the Insolvency Act 1986),

and (to the extent relevant) within 20 Working Days of an appointment, the trustee in bankruptcy, liquidation, receiver, administrative receiver, administrator, nominee or other similar officer has not provided to the Company a guarantee of future performance by the Customer of this Agreement in such form and amount as the Company may reasonably require.

Consequences of Termination

19.4 The ending or termination of this Agreement (by either Party and for whatever reason) shall not affect any of the rights, remedies or obligations of either Party that have accrued prior to such ending or termination, or any of the provisions of this Agreement that are expressly (or by implication) intended to survive such ending or termination.

19.5 Subject to the provisions of any replacement connection agreement in respect of the Connection Point, upon the ending or termination of this Agreement (by either Party and for whatever reason):

19.5.1 the Customer's right to be Connected (and the Customer's right to the Maximum Import Capacity and/or Maximum Export Capacity) shall end, and the Company may De-energise and/or

Disconnect the Connection Point;

19.5.2 the Customer shall allow the Company (at its sole option) to enter the Property in order to remove the Company's Equipment (or any part of it); and/or

19.5.3 the Customer shall pay to the Company all sums then due and payable or accrued due under this Agreement, and any reasonable costs incurred by the Company in Disconnecting the Connection Point and removing the Company's Equipment (or any part of it).

20. FORCE MAJEURE

20.1 If either Party shall be unable to carry out any of its obligations under this Agreement due to a circumstance of Force Majeure this Agreement shall remain in effect but save as otherwise provided herein both Parties' obligations other than any obligation as to payment of charges shall be suspended without liability for a period equal to the circumstance of Force Majeure provided that:

20.1.1 the Party affected by the Force Majeure promptly gives the other Party written notice describing the circumstance of the Force Majeure (including the nature of the occurrence and its expected duration) and, where reasonably practicable, continues to furnish regular reports with respect thereto during the period of the Force Majeure;

20.1.2 the suspension of performance is of no greater scope and of no longer duration than is required by the Force Majeure;

20.1.3 no obligations of either Party that arose before the Force Majeure causing the suspension of performance are excused as a result of the Force Majeure; and

20.1.4 the non-performing Party uses all reasonable efforts to remedy its inability to perform.

21. DISPUTES RESOLUTION

21.1 Without prejudice to the rights of the Parties given in the Electricity Distribution Licence or the Act in respect of dispute resolution (including as referred to in Clauses 12.12, 14.4 and 22.2), the Parties shall not be obliged to submit any dispute, difference or question arising under or in connection with this Agreement to any prescribed method of resolution but shall be entitled, in the event of a failure to agree between them on a method of dispute resolution, to commence such proceedings or make such reference as they may competently pursue.

22. VARIATIONS

22.1 The National Terms of Connection (and therefore this Agreement) will be changed automatically to incorporate any changes which are approved by the Authority pursuant to the DCUSA. Notice of any change which is approved will be advertised in the national press, and the new terms will be published on the internet at www.connectionterms.co.uk.

22.2 Either Party may, at any time, ask the other to enter into an alternative connection agreement in respect of the Premises if it believes an alternative agreement is needed because of the nature or use of the Connection Point and/or the Premises. Each Party shall negotiate in good faith the terms of any such alternative agreement. If an alternative agreement has not been agreed within 1 month of its being proposed, either Party may refer the matter to the Authority for determination pursuant to section 23 of the

Act. The Parties shall give effect to any such determination, and shall enter into any agreement as shall be necessary to give effect to any such determination.

23. NOTICES

23.1 Any notice, demand, certificate or other communication required to be given or sent under this Agreement shall be in writing and delivered by hand, by first class post or by email.

23.2 Subject to Clause 23.3, the required address for the delivery of notices to the Company shall be its registered address (in which case delivery must be by hand or by first class post), and for delivery to the Customer shall be the Premises or its registered or principal business address (in which case delivery must be by hand or by first class post).

23.3 Either Party may, from time to time, notify the other in accordance with this Clause 23 of the address and/or email address at which the first Party will accept delivery of notices for the purposes of this Agreement.

23.4 A notice or other form of communication shall be deemed to have been served and received as follows:

23.4.1 if given or delivered by hand, at the time when given or delivered;

23.4.2 if sent by first class post, at the expiration of two Working Days after the document was delivered (bearing the correct address and being pre-paid) into the custody of the postal authorities; and

23.4.3 if sent by email, at the time when delivered to the recipient's email server.

24. GENERAL

24.1 This Agreement, and any documents referred to in it, contains the entire agreement between the Parties in relation to its subject matter. Each of the Parties irrevocably and unconditionally waives any right it may have to claim damages for, and/or to rescind this Agreement because of, breach of any warranty not expressly contained, or referred to, in this Agreement, or any misrepresentation whether or not contained in this Agreement, unless such misrepresentation was made fraudulently.

24.2 None of the provisions of this Agreement shall be considered waived by either Party except when such waiver is given in writing. No delay by or omission of either Party in exercising any right, power, privilege or remedy under this Agreement or the Distribution Code shall operate to impair such right, power, privilege or remedy or be construed as a waiver thereof. Any single or partial exercise of any such right, power, privilege or remedy shall not preclude any other future exercise thereof or the exercise of any other right, power, privilege or remedy.

24.3 If any provision of this Agreement is or becomes or is declared invalid, unenforceable or illegal by a Competent Authority, such invalidity, unenforceability or illegality shall not prejudice or affect the remaining provisions of this Agreement which shall continue in full force and effect notwithstanding such invalidity, unenforceability or illegality.

24.4 Each Party's officers, employees and agents shall have the benefit of, and be able to enforce, Clauses 15.2 and 15.3. Subject thereto, the Parties do not intend that any provision of this Agreement will be enforceable by a third party (whether by virtue of the Contracts (Rights of Third Parties) Act 1999 or otherwise). Notwithstanding that a person who is not a Party may have a right to enforce particular Clauses under the

Contracts (Rights of Third Parties) Act 1999 in accordance with this Clause, the Parties may vary or terminate this Agreement in accordance with its terms without requiring the consent of any such person.

25. GOVERNING LAW AND JURISDICTION

25.1 Subject to Clause 25.2, this Agreement will be governed by, and interpreted in accordance with, the laws of England and Wales, under the jurisdiction of the English and Welsh courts.

25.2 If the Connection Point is located in Scotland (except where the Company is Northern Powergrid (Northeast) plc (a company incorporated in England & Wales with company number 2906593) or Electricity North West Limited (a company incorporated in England & Wales with company number 2366949)), this Agreement will be governed by, and interpreted in accordance with, Scots law, under the jurisdiction of the Scottish courts.

For information: supply characteristics

As required by law, the electricity delivered to the Premises through the Distribution System will normally be at one of the voltages (and will have the technical characteristics) set out below:

- At 230 volts nominal alternating voltage: normally a single-phase supply, with a permitted range of voltage variation from plus 10% to minus 6%.
- At 400 volts nominal alternating voltage: normally a three-phase supply, with a permitted range of voltage variation from plus 10% to minus 6%.
- At a nominal alternating voltage equal to or greater than 1000 volts but less than 132,000 volts: normally a three-phase supply, with a permitted range of voltage variation from plus 6% to minus 6%. For the avoidance of doubt this range includes not exhaustively Connection Points with a nominal alternating voltage of 3,300, 6,600, 11,000, 20,000, 22,000, 25,000, 33,000, and 66,000 volts.
- At a nominal alternating voltage equal to or greater than 132,000 volts: normally a three-phase supply, with a permitted range of voltage variation from plus 10% to minus 10%.
- At all of the above voltages: the supply frequency will be 50 hertz, with a permitted nominal variation of plus or minus 1%.

Section 4

This Section 4 only applies to 'unmetered supplies' - see paragraph D of Section 1.

1. DEFINITIONS & INTERPRETATION

1.1 In this Section 4, except where the context otherwise requires, the following expressions shall have the meaning set out opposite them (and cognate expressions shall be construed accordingly):

Act	means the Electricity Act 1989;
Affiliate	means, in respect of a person, any company which is, from time to time, a subsidiary or holding company of that person or a subsidiary of any such holding company (and the terms “subsidiary” and “holding company” shall have the meanings given to them by section 1159 of the Companies Act 2006);
Agreed Codes	means the ‘Charge Codes’ and the ‘Switch Regime Codes’, (in each case) as referred to in the Unmetered Supplies Procedure;
Agreement	means the terms and conditions of Sections 1 and 4 of the National Terms of Connection, which the Customer has agreed with the Company to accept in respect of the Connection Points;
Application for a Modification	means the Company’s standard form for applying for a Modification, which is available from the Company on request;
Apparatus	means all equipment in which electrical conductors are used, supported or of which they may form part;

Authorised Persons	means persons authorised by the Company to undertake certain work on the Connection Equipment and the Monitoring Equipment;
Authority	means the Gas and Electricity Markets Authority as established by section 1 of the Utilities Act 2000;
Balancing and Settlement Code or **"BSC"**	means the Balancing and Settlement Code maintained pursuant to the ESO Licence (including any and all subsidiary documents and procedures made under it);
Company	means the holder of the Electricity Distribution Licence which applies to the Distribution System through which electricity is conveyed to, and from, the Connection Point;
Company's Equipment	means the switchgear, metering or other equipment, lines or other parts of the Distribution System, and any other property or rights of the Company (including any Substation apparatus);
Company's Premises	means any land or buildings of the Company in which any of the Customer's Installation is to be installed or is, from time to time, situated;
Competent Authority	includes the Secretary of State, the Authority and any local or national agency, authority, court, department, inspectorate, minister, ministry, official or public or statutory person (whether autonomous or not) of (or of the government of) the United Kingdom or of the European Union, insofar (in each case) as it is acting within the limits of its proper authority;
Connect	means the installation of the Connection Equipment in such a way that (subject to Energisation) the Customer may import electricity to, and/or export electricity from, the Customer's Installation over the Distribution System at the Connection Point;
Connection Equipment	means that part of the Company's Equipment which has been provided and installed by the Company for the purposes of providing a connection at the Connection Point;
Connection Point	means the point or points of connection at which electricity may (upon Energisation) flow between the Distribution System and the Customer's Installation, and is a reference to the point or points of connection at the Premises to which this Agreement applies;
Connection and Use of System Code or **CUSC**	means the Connection and Use of System Code maintained pursuant to the ESO Licence (including the framework agreement by which it is made contractually binding, and any supplementary agreement made under it);
Control Equipment	means: a. the control equipment owned by the Customer or the Company, as applicable; b. installed on the Company's side of the supply terminals; and c. used for the purposes of controlling the actual pattern of consumption of electricity at the Connection Point (or at the Connection Point and other connection points) in lieu of the Customer providing its own control equipment within the Customer's Installation;
Customer	means the person, other than the Company, to whom this Agreement applies;
Customer's Installation	means any structures, equipment, lines, appliances or devices (not being the Company's Equipment) used, or to be used, at the Premises (whether or not owned or used by the Customer);
De-energisation	means the deliberate movement of any switch or the removal of any fuse or the taking of any other step whereby no electrical current can flow between the Distribution System and the Customer's Installation at the Connection Point (and "De-energise(d)" shall be construed accordingly);
Detailed Inventory	means a record of the Customer's Installation which contains in relation to each Item the information specified in Clause 7.1 (as such record is amended from time to time in accordance with this Agreement);
DGNU Payment	means the compensation mechanism (the Distributed Generation Network Unavailability Payment) created by the Authority to make compensation payments for network outages experienced by customers with distributed generation;
Directive	includes any present or future directive, requirement, licence condition, instruction, direction or rule of any Competent Authority (but only, if not having the force of law, if compliance with the Directive is in accordance with the general practice of persons to whom the Directive is addressed) and includes any modification, extension or replacement thereof then in force;
Disconnection	means the permanent electrical disconnection of all or any of the Connection Equipment (and "Disconnect" shall be construed accordingly);
Disconnection Notice	means a notice sent by the Customer to the Company requesting that the Company Disconnect one or more of the Connection Points;
Distribution Code	means the distribution code established pursuant to the Company's Electricity Distribution Licence;
Distribution Connection and Use of System Agreement or **"DCUSA"**	means the Distribution Connection and Use of System Agreement established pursuant to the Electricity Distribution Licences;
Distribution System	has the meaning given to that expression in the Electricity Distribution Licences, and (unless the context otherwise requires) is a reference to the Company's Distribution System (as defined in the Company's Electricity Distribution Licence);
DNO	means the holder of an Electricity Distribution Licence in which Section B of the standard distribution licence conditions has effect;
EDNO	means the holder of an Electricity Distribution Licence which is not a DNO (or is a DNO operating outside of its Distribution Services Area, as defined in its Electricity Distribution Licence) where its Distribution System is embedded within a DNO's GSP Group (as defined in the BSC);

Election	means, where the Company is an EDNO, the notification (if any) by the Customer to the Company that the Customer wishes to combine data in respect of certain Items forming all or part of the Customer's Installation with data in respect of other items comprising installations connected to the Host Network (pursuant to which notification the Host DNO shall act as UMSO in respect of those Items);
Electricity Distribution Licence	means an electricity distribution licence granted pursuant to section 6 (1) (c) of the Act;
Electricity Supplier	means a person who is the holder of a licence to supply electricity under section 6 of the Act, or who is exempted from the requirement to hold such a licence under section 5 of the Act;
Energisation	means the movement of any switch or the insertion of any fuse or the taking of any other step so as to enable an electrical current to flow between the Distribution System and the Customer's Installation at the Connection Point (and "Energise(d)" shall be construed accordingly);
ESO Licence	means a licence granted or treated as granted under section 6(1)(da) of the Act.
Force Majeure	means, in respect of a Party, any event or circumstance which is beyond the reasonable control of that Party and which results in or causes the failure of that Party to perform any of its obligations under this Agreement, which event of circumstance shall include: act of God, strike lockout or other industrial disturbance, act of the public enemy, war declared or undeclared, threat of war, terrorist act, blockade, revolution, riot, insurrection, civil commotion, public demonstration, sabotage, act of vandalism, lightning, fire, storm, flood, earthquake, accumulation of snow or ice, lack of water arising from weather or environmental problems, explosion, infrequent transient voltage variations (whether substantial or otherwise), and fault or failure of Plant and Apparatus (to the extent that any such event or circumstance could not have been prevented by Good Industry Practice); and shall also include: governmental restraint, any Act of Parliament, other legislation, or Directive (not being any order, regulation or direction under section 33, 34 or 35 of the Act); and (in respect of the Company) shall include: the failure of any generator or the ISOP to provide the Company with electricity (or any deficiency in the electricity provided) to the extent that such failure or deficiency or the consequences thereof could not have been prevented by the exercise of Good Industry Practice by the Company. Provided that a Party's lack of funds shall not be interpreted as a cause beyond that Party's reasonable control;
Generating Equipment	means any electricity generating unit;
Good Industry Practice	means the exercise of that degree of skill, diligence, prudence and foresight which would reasonably and ordinarily be expected from a skilled and experienced operator engaged in the same type of undertaking under the same or similar circumstances;
Grid Code	means the code of that name established pursuant to the ESO Licence;
Host DNO	means, where the Company is an EDNO, the DNO for the GSP Group (as defined in the BSC) within which the Company's Distribution System is embedded;
Host Network	means, where the Company is an EDNO, the network of the Host DNO;
Item	means each piece of equipment, appliance or device to which a 'Charge Code' applies under the Unmetered Supplies Procedure and which forms part of the Customer's Installation and is referred to as Apparatus under MHHS;
ISOP	means the Independent System Operator and Planner as designated by the Secretary of State under section 162 of the Energy Act 2023 as the holder of the ESO Licence;
kVA	means kilovoltamperes;
kW	means kilowatts;
Market Domain I.D.	means the unique identifier for a market participant under the industry code known as the Data Transfer Services Agreement;
Maximum Export Capacity	means, in respect of a Connection Point (or the Connection Points collectively), the maximum amount of electricity (expressed in kW or kVA) which is permitted by the Company to flow into the Distribution System through the Connection Point (or the Connection Points collectively). The Maximum Export Capacity of the Connection Point shall be zero unless otherwise agreed;
Maximum Import Capacity	means, in respect of a Connection Point (or the Connection Points collectively), the maximum amount of electricity (expressed in kW or kVA) which is permitted by the Company to flow from the Distribution System through the Connection Point (or the Connection Points collectively);
Metering Point	has the meaning given to that expression in the BSC;
Metering System	has the meaning given to that expression in the BSC, and is a reference (unless the context otherwise requires) to the metering system or systems associated with the Connection Point;
Modification	means, in respect of a Party, any actual or proposed replacement, renovation, modification, alteration or construction by or on behalf of that Party to either that Party's Plant or Apparatus or the manner of its operation, which (in either case) has or will have an effect on the other Party;
Modification Notification	means the Company's standard form of Modification notification from time to time applicable;
Modification Offer	means an offer by the Company to the Customer made pursuant to Clause 15 of terms for connection in relation to any proposed Modification at or affecting one or more of the Connection Points, including any revision or extension of such offer;
Monitoring Equipment	means any monitoring and metering equipment that may be used by the Company for the purposes of measuring or checking consumption otherwise than for settlement;
National Electricity Transmission System	shall have the meaning given to that expression in the CUSC;

National Terms of Connection	means these National Terms of Connection, of which this Section 4 forms part, as amended from time to time in accordance with Clause 23;
Party	means each of the Company and the Customer (and "Parties" shall be construed accordingly);
Plant	means fixed and movable items used in the generation, supply and/or distribution of electricity (other than Apparatus);
Power Factor	means the ratio of real power to apparent power;
Premises	includes any land, building, or structure, and (unless the context requires otherwise) is a reference to the premises to which this Agreement applies;
Property	means the Premises to which this Agreement applies, together with any other premises of the Customer in which the Company's Equipment is installed from time to time (or to which the Company may require access for the purpose of accessing the Company's Equipment);
Property Documents	means any and all of the agreements that create (or otherwise concern) property interests and/or rights (including all leases, wayleaves, easements, and servitudes) in favour of the Company, to which the Customer is also party or which relate to the Connection Equipment;
Re-energisation	means the movement of any switch or the installation of any fuse or the taking of any other step whereby electrical current can flow between the Distribution System and the Customer's Installation at the Connection Point (and "Re-energise(d)" shall be construed accordingly);
Registrant	means the person registered in accordance with the BSC as responsible for the Metering System (which may be an Electricity Supplier, or any other party to the BSC);
Regulations	means the Electricity Safety, Quality and Continuity Regulations 2002, the Electricity (Unmetered Supply) Regulations 2001, and/or the Electricity at Work Regulations 1989;
Small-Scale Generating Equipment	means one or more items of Generating Equipment that have an aggregate rating of no greater than 16 amps per phase connected at low voltage;
Substation	means an electricity substation (as defined in Regulation 1(5) of the Electricity Safety, Quality and Continuity Regulations 2002) of the Company;
Summary Inventory	means a statement of the total number of Items (listed by reference to the applicable Agreed Codes), such statement to be extracted from the Detailed Inventory (as such statement is amended from time to time in accordance with this Agreement) and is referred to as UMS Inventory under MHHS;
System Outage	means the deliberate act by the Company, by whatever means it determines, to interrupt the flow of electrical current to a part or parts of its Distribution System, for the purposes of carrying on its activities;
UMSO	means an Unmetered Supplies Operator (as defined in the BSC);
Unmetered Supplies	means a supply of electricity the quantity of which the Company has authorised not to be measured by physical metering equipment by the issue of an Unmetered Supply Certificate;
Unmetered Supply Certificate	means a certificate issued by the Company under the Unmetered Supplies Procedure stating, among other things, the MSID(s) (as defined in the Unmetered Supplies Procedure) allocated to one or more Items;
Unmetered Supplies Procedure	means Section S of the BSC, together with BSCP 520; or for MHHS, means Section S the BSC, together with BSCP700 and BSCP704;
Working Day	has the meaning given to that term in section 64 of the Act.

1.2 In this Agreement, unless the context otherwise requires:

1.2.1 a reference to a "person" includes a reference to an individual, a body corporate, an association or a partnership;

1.2.2 a reference to the singular includes the plural (and vice versa), and to a gender includes every gender;

1.2.3 a reference to a "Section" is a reference to a section of the National Terms of Connection, and to a "Clause" is to a clause of this Section 4;

1.2.4 the headings are for ease of reference only and shall not affect its interpretation;

1.2.5 the words "include", "including" and "in particular" are to be construed without limitation to the generality of the preceding words;

1.2.6 a reference to any statute or statutory provision includes any subordinate legislation made under it, any provision which it has modified or re-enacted, and any provision which subsequently

supersedes or re-enacts it (with or without modification);

1.2.7 a reference to any agreement, code, licence or other document is to such agreement, code, licence or other document as amended, supplemented, novated or replaced from time to time (and includes all subsidiary agreements entered into under it); and

1.2.8 the word “costs” shall include all overhead and financing charges, and a reasonable rate of return on the capital represented by such costs.

2. APPLICATION OF THIS AGREEMENT

2.1 The National Terms of Connection create separate legal agreements (each an Agreement) in respect of each Premises to which the National Terms of Connection apply.

2.2 Where, in respect of the Premises to which this Agreement applies, more than one legal entity falls within the definition of Customer, separate Agreements shall be created between the Company and each such Customer.

2.3 Where there is more than one Connection Point at the Premises to which this Agreement applies, and more than one Distribution System is used to convey electricity to, and from, the Connection Points, separate Agreements shall be created between the Customer and the Electricity Distribution Licence holder for each such Distribution System (each such Electricity Distribution Licence holder being the Company for the purposes of each such Agreement).

2.4 Where the Company is an EDNO and the Customer makes an Election, this Agreement creates additional rights for the Host DNO (as set out in Clause 25.4.

3. THE CUSTOMER'S RIGHT TO BE (AND REMAIN) CONNECTED

3.1 This Agreement shall govern the terms upon which the Customer's Installation shall be entitled to be (and remain) Connected to the Distribution System.

3.2 The Customer's Installation will be, and remain, Connected to the Company's Distribution System in accordance with the provisions of the Act, any other legal requirements that apply from time to time, and the terms of this Agreement.

3.3 The Company may refuse to Connect the Customer's Installation (or any part of it) where it is not appropriate (in accordance with the Regulations and the Unmetered Supplies Procedure) for a particular piece or type of equipment, appliance or device to receive Unmetered Supplies (or to be connected to an Item that would otherwise receive Unmetered Supplies), and the Company may require the Customer to remove that equipment, appliance or device from the Customer's Installation so that it does not receive Unmetered Supplies (or continue to be connected to an Item receiving Unmetered Supplies).

3.4 The right to be (and remain) Connected does not include the right to be (and remain) Energised.The right to be (and remain) Connected does not include the right to be (and remain) Energised.

4. THE CUSTOMER'S RIGHT TO BE (AND REMAIN) ENERGISED

4.1 The Customer's right to be (and remain) Energised is subject to the Company's right to De-energise the Connection Point in accordance with Clause 5, and is conditional upon:

4.1.1 the Customer having the ability to perform and comply with all of its obligations under this Agreement;

4.1.2 the Customer or an Electricity Supplier being registered, in accordance with the BSC, as responsible for the Metering System;

4.1.3 the Customer complying with the Unmetered Supplies Procedure;

4.1.4 the Customer and the Company having agreed the information required to be included in the Detailed Inventory;

4.1.5 either:

A. the Company; or

B. where the Company is an EDNO and the Customer has made an Election, the Host DNO, having issued an Unmetered Supply Certificate to the Customer in respect of the Items comprising the Customer's Installation (and that certificate coming into, and continuing in, full force and effect);

4.1.6 where there is any Generating Equipment at the Premises, the Customer (or, if the Customer is not the owner or operator of the Generating Equipment, the owner or operator of the Generating Equipment):

A. not being within any category of person that is required in accordance with the provisions of the CUSC to be a party to the CUSC (or to be a party to any supplementary agreement under the CUSC); or

B. (to the extent that it is within any such category) being a party to the CUSC (and/or to the relevant supplementary agreement under the CUSC); and

4.1.7 where there is any Generating Equipment at the Premises, the Customer (or, if the Customer is not the owner or operator of the Generating Equipment, the owner or operator of the Generating Equipment) holding a licence to generate electricity under section 6 of the Act, or being exempted from the requirement to hold such a licence under section 5 of the Act.

4.2 The Customer represents and undertakes to the Company that, at the date this Agreement comes into effect and for so long as it remains in effect, all of the conditions set out in Clause 4.1 are (and will remain) satisfied. The Customer shall notify the Company as soon as reasonably practicable if any of the conditions in Clause 4.1 cease to be satisfied. The Customer shall indemnify the Company against all actions, proceedings, claims or demands brought or threatened against the Company as a result of any of the conditions set out in Clause 4.1 not being (or ceasing to be) satisfied.

4.3 This Agreement shall not give the Customer any right to:

4.3.1 receive a supply of electricity to the Premises;

4.3.2 sell electricity exported from the Premises; and/or

4.3.3 use the Distribution System for the purposes of providing a supply of electricity (or to otherwise have electricity transported through the Distribution System),

and the Company therefore makes no warranty to the Customer in relation thereto. Where the Customer is not the Registrant, the Customer must contract with the Registrant for the matters outlined in Clauses 4.3.1

and 4.3.2, and the Registrant will contract with the Company for the matters outlined in Clause 4.3.3. Where the Customer is the Registrant, it must contract for the matters outlined in Clauses 4.3.1 and 4.3.2 pursuant to the BSC, and must contract separately with the Company for the matters outlined in Clause 4.3.3.

4.4 When the Connection Point is Energised in accordance with this Agreement, the characteristics of any supply of electricity delivered shall be subject to such variations as may be permitted by the Regulations. The Company does not guarantee that the supply of electricity will be free from transient variations in voltage and frequency or voltage pulses or harmonic frequencies, and the Customer must take its own protective measures if it requires a higher standard of supply.

5. DE-ENERGISATION

Emergency De-energisation

5.1 If, in the reasonable opinion of:

5.1.1 the Company, the condition or manner of operation of the Customer's Installation or other equipment, and/or the condition or manner of operation of the Distribution System, poses an immediate threat of injury or material damage to any person or property (including the Customer's Installation, the Distribution System, the National Electricity Transmission System, and the electrical systems and installations connected (directly or indirectly) to the Distribution System and/or the National Electricity Transmission System), then the Company shall have the right to immediately De-energise the Connection Point if it is necessary or expedient to do so to avoid the occurrence of such injury or damage; or

5.1.2 the Customer, the condition or manner of operation of the Distribution System or the Connection Equipment poses an immediate threat of injury or material damage to any person or property (including the Customer's Installation), then the Customer shall have the right to safely De-energise the Customer's Installation if it is necessary or expedient to do so to avoid the occurrence of such injury or damage, and shall promptly afterwards inform the Company of the incident.

De-energisation on Request

5.2 The Company shall De-energise the Connection Point within a reasonable time (or, in circumstances of urgency, as soon as is reasonably practicable) after being instructed to do so by either the Customer or the Registrant. Where the instruction has been given by the Registrant, the Company need not give the Customer notice of the intention to De-energise.

De-energisation Generally

5.3 Where the circumstances referred to in Clause 5.1.1 exist but with the proviso that the threat is not immediate, the Company may nevertheless De-energise the Connection Point, in which case the Company shall give the Customer as much advance notice of the De-energisation as is reasonably practicable in the circumstances.

5.4 The Company may De-energise the Connection Point pursuant to the Regulations (including where it is not appropriate for a particular Item, or a particular type of Item, to receive Unmetered Supplies), in which case the De-energisation shall be undertaken in accordance with any applicable requirements under the Regulations.

5.5 The Company may De-energise the Connection Point:

5.5.1 if it is necessary or reasonable for the Company to do so as part of a System Outage carried out in accordance with its statutory rights and obligations and Good Industry Practice; and

5.5.2 in order to permit other persons to connect to the Distribution System,

in which case, the Company shall give the Customer such notice of the De-Energisation as is required by law (and shall use its reasonable endeavours to provide as long a notice as is practicable).

5.6 The Company may, at any time without the need to give prior notice to the Customer, De-energise the Connection Point if:

5.6.1 the Company is instructed or required to do so pursuant to the Act, its Electricity Distribution Licence, any Directive, the CUSC, the BSC, the DCUSA and/or the Electricity Supply Emergency Code (being the code of that name designated by the Secretary of State);

5.6.2 the Company reasonably considers it necessary to do so for safety reasons or for the security of the Distribution System or any other electrical system (including in order to avoid interference with the regularity or efficiency of the Distribution System);

5.6.3 the Company reasonably believes that the Customer has made unauthorised use of electricity or committed theft of electricity;

5.6.4 if any of the conditions in Clause 4.1 cease to be satisfied, or the Customer breaches any of the provisions of this Agreement (including Clauses 8, 11, 13.3, 14 and 17);

5.6.5 the Customer's acts, omissions and/or continued Connection cause the Company to breach this Agreement or any law or Directive;

5.6.6 the Company is entitled to De-energise the Connection Point in accordance with any other connection agreement relating to that Connection Point (provided the Company acts reasonably in exercising such right); and/or

5.6.7 the Company is otherwise permitted to do so under the provisions of this Agreement (including under Clause 8.5).

Miscellaneous

5.7 If the Company De-energises the Connection Point at the request of the Customer, or as a result of the acts, omissions or breaches of the Customer, then the Customer shall pay to the Company on demand any costs incurred by the Company as a result of such De-energisation and any subsequent Re-energisation.

5.8 If the Company De-energises the Connection Point at the request of the Customer, the Company shall Re-energise the Connection Point as soon as reasonably practicable after being instructed to do so by the Customer or the Registrant. If the Company De-energises the Connection Point at the request of the Registrant, the Company shall Re-energise the Connection Point as soon as reasonably practicable after being instructed to do so by the Registrant.

5.9 Where the Connection Point is De-energised otherwise than pursuant to Clause 5.2, the Company shall Re-energise the Connection Point as quickly as reasonably practicable after the circumstances leading to the

De-energisation have ceased to exist.

5.10 In undertaking work relating to Energisation, De-energisation and any subsequent Re-energisation, the Company shall act in accordance with Good Industry Practice (and, subject thereto, shall decide on the extent and nature of the work required).

5.11 If at any time when the Customer does not have a right for a Connection Point to be (and remain) Energised but nevertheless imports electricity from, or exports electricity to, the Distribution System through that Connection Point, then the Customer shall (to the extent the Company is unable to recover the relevant amounts from the Registrant) pay to the Company forthwith upon demand such sum as the Company may require for such import or export calculated in accordance with the Company's then current charges, together with such other reasonable and proper costs, losses and expenses as the Company may incur as a result thereof.

6. DISCONNECTION

6.1 The Customer shall be entitled to send to the Company a Disconnection Notice providing an explanation for why there is no reasonably foreseeable future use for the Connection Point, and specifying the date on which the Disconnection is required.

6.2 Unless agreed otherwise following the receipt of a Disconnection Notice in accordance with Clause 6.1, the Company shall (on, or as soon as reasonably practicable after, the date specified in the Disconnection Notice) remove the Connection Equipment from the Property. The Customer acknowledges that it may not be practicable to remove the equipment on the date specified, or for some time thereafter. The Customer shall pay to the Company forthwith upon demand an amount equal to the reasonable costs and expenses incurred by the Company in removing the Connection Equipment.

6.3 The Company shall be entitled to Disconnect the Connection Point if the Company reasonably considers it necessary to do so for safety reasons. Where such safety reasons were the result of the Customer's acts or omissions, the Customer shall pay to the Company forthwith upon demand an amount equal to the reasonable costs and expenses incurred by the Company in undertaking the Disconnection.

6.4 The Company shall be entitled to Disconnect the Connection Point on 20 Working Days prior notice where the Connection Point is De-energised for a continuous period of 3 months or more. Where such De-energisation was the result of the Customer's acts or omissions, the Customer shall pay to the Company forthwith upon demand an amount equal to the reasonable costs and expenses incurred by the Company in undertaking the Disconnection.

7. INFORMATION

7.1 The Customer shall (except to the extent that the Company otherwise agrees) provide, to the Company (and, where the Customer has made an Election, to the Host DNO), the minimum information required by the Unmetered Supplies Procedure and (without duplication) the following information (together constituting the Detailed Inventory), which information shall be set out separately for each Item:

7.1.1 Location:

A. the grid reference for the Item, to seven digits easting and seven digits northing (0.1m resolution), using the current edition from time to time of Ordnance Survey scale 1:500;

B. the address for the Item (to include road/street name, parish or village name and post code) or adjacent address for the Item (such as x metres north/south/east/west from firm map detail outside or opposite a house number); and
C. (where applicable) the reference number displayed on the Item.

7.1.2 Detail: information sufficient to allow the calculation of the annual electricity consumption, and the pattern of electricity consumption for the Item (preferably by reference to the applicable Agreed Codes), to include:

A. the type, description and wattage of the Item;
B. (if applicable) the type of control gear installed (e.g. low loss, optimal electronic or high frequency as used in street lighting); and
C. where the equipment is not operating continuously, the type of switch control (e.g. central management system (CMS) node, photoelectric control unit (PECU), timeswitch, etc.) and the associated settings of the controller (e.g. dusk to dawn, part night times, 70/35 lux).

7.1.3 *Company Name:* The name of the Company (using its Market Domain I.D, as notified to the Customer by the Company from time to time).

7.2 Where the Customer has made an Election in respect of the Premises that are subject to this Agreement and the Customer has also made an equivalent election in respect of premises connected to one or more other EDNO networks which are also connected to the same Host Network, then the information to be provided under Clause 7.1 and the information to be provided under the equivalent clause of the Customeragreement(s) with the other EDNO(s) shall be provided as a single consolidated file to the Company, the Host DNO and the other EDNO(s)

7.3 Whenever there is an addition or removal of one or more Items (or an amendment of the information relating to one or more Items) such that the Detailed Inventory requires updating, then the Customer shall provide an updated Detailed Inventory to the Company (and, where the Customer has made an Election, to the Host DNO). Such updated Detailed Inventory shall be provided by the end of the calendar month next following the calendar month in which the addition, removal or amendment occurred (or at such other frequency as the Customer and the Company may agree). Unless otherwise agreed with the Company, the Customer shall not provide more than one updated Detailed Inventory per calendar month.

7.4 Where the Customer has not notified the Company of any additions, removals or amendments from or to the Detailed Inventory for 12 consecutive calendar months (or such other period as the Company and the Customer may agree), then the Customer shall provide confirmation to the Company (and, where the Customer has made an Election, to the Host DNO) that there have been no such additions, removals or amendments.

7.5 Where the Company agrees to any addition, deletion or amendment of the Detailed Inventory (whether pursuant to Clause 7.3 or otherwise), the Summary Inventory shall be deemed to be amended accordingly from the date the Customer notifies the Company (and, where the Customer has made an Election, the Host DNO) of such addition, deletion or amendment.

7.6 All information provided by the Customer under this Clause 7 shall be in such form (including computer readable form) as the Company (or, where the Customer has made an Election, the Host DNO) may reasonably specify from time to time after consultation with the Customer. Where the information is not provided in accordance with the Agreed Codes and in the file format set out in the Unmetered Supplies Procedure, the Company (or, where the Customer has made an Election, the Host DNO) will convert the

information received as soon as reasonably practicable so that the information can be used in settlement pursuant to the BSC (and the Customer shall pay upon demand the Company's or, where the Customer has made an Election, the Host DNO.

7.7 The Parties shall comply with the provisions for audit as set out in this Clause 7.7:

7.7.1 The Company shall be entitled at all times on giving no less than 10 Working Days' notice to carry out an audit of the Customer's Installation against the Detailed Inventory, provided that the Company may not carry out more than one such audit in any six-month period unless the previous audit has disclosed any material discrepancy that arises from the Customer's breach of this Agreement, breach of statutory duty and/or tortious (including negligent) act or omission.

7.7.2 If the audit reveals material irregularities or discrepancies in the Detailed Inventory, the Company shall be entitled to recover from the Customer the reasonable cost incurred by the Company in carrying out the initial audit, and the Customer shall also bear the cost of all additional audits required to confirm the accuracy of the new Detailed Inventory.

7.7.3 The Customer shall give the Company access to any Plant and/or Apparatus as it requires to carry out any audit in accordance with this Clause 7.7, and shall provide access to any information requested in respect of such audit.

7.8 In addition to the rights and remedies which the Company has under any other provision of this Agreement, where an audit pursuant to Clause 7.7 reveals irregularities or discrepancies in the Detailed Inventory, then, in respect of the Connection Points in question:

7.8.1 the Customer shall submit a revised Detailed Inventory to the Company (and, where the Customer has made an Election, the Host DNO) to reflect such adjustments; and

7.8.2 (if applicable) the Company (or, where the Customer has made an Election, the Host DNO) shall make such adjustment to the Summary Inventory;

as (in each case) may be required in order to ensure the accuracy (within the margins of accuracy set out in the BSC) of the settlement data on which the related supply and distribution use of system charges are calculated in respect of the Unmetered Supplies.

7.9 Where Items on the Detailed Inventory are subject to a change of ownership then such Items will remain on the Customer's Detailed Inventory until the Company has been notified by the new owner that such Items have been added to the new owner's detailed inventory.

7.10 The Customer grants, or shall procure the grant (to the extent the Customer is able to do so), to the Company (and, where the Customer has made an Election, to the Host DNO and any other distribution licensee to whose system items within the same inventory are connected) free and unrestricted access to and use of any information or data concerning electricity taken through any Connection Point available under this Agreement, the Unmetered Supplies Procedures or the BSC for use in the Company's (and, where applicable, the Host DNO's and other distribution licensee's) business whether that information or data is held by the Customer or another person on its behalf.

7.11 Where any additions or amendments to the Detailed Inventory or to the Summary Inventory are made pursuant to this Clause 7, or where a Modification to the Customer's Installation is made pursuant to Clause 15, the Customer shall ensure that any charges which the Company requires to be paid in accordance with the statements of charges made by the Company from time to time under the Company's Electricity

Distribution Licence are paid for any such addition, amendment or Modification (including those relevant to the addition of a new Connection Point), and that any works which the Company requires to be effected are carried out such that they are fit for purpose.

7.12 If at any time any Item shall be re-rated such that the characteristics of its consumption of electricity are different than they were before such re-rating, the Company (or, where the Customer has made an Election, the Host DNO) may require recalculation of the unmetered energy consumption as specified in the Unmetered Supplies Procedure from (subject to the limitations on adjustments to electricity settlement data under the BSC) the date on which the Item first was registered in the Detailed Inventory (or any later date that the Company or (where applicable) the Host DNO may reasonably specify).

8. THE CUSTOMER'S INSTALLATION AND EQUIPMENT

Equipment Generally

8.1 The Customer shall ensure compliance at all times with the Regulations and any laws or Directives in respect of the Customer's Installation which are binding on the Customer.

8.2 Save where express written representations are made by the Company, neither by inspection (if any) or non-rejection (nor in any other way) does the Company give any warranty (express or implied) as to the adequacy, safety, or other characteristics of the Customer's Installation, and the Company shall not be responsible thereof.

8.3 The Customer hereby acknowledges that the Company may use switchgear with auto-reclosing facilities, that the Customer's Installation should be designed and built so as not to suffer damage through the operation of such facilities and that the Company accepts no liability for such damage (subject to Clause 16.3) to the extent (if any) such damage is attributable to the Customer's failure to so design and build the Customer's Installation.

8.4 The Customer shall maintain the Customer's Installation so that it is reasonably fit for the purpose for which it is used, and so that neither it nor its operation or use shall be liable to cause damage to, or interference with, the Distribution System or the National Electricity Transmission System (or their operation or use or the flow of electricity through them).

8.5 If the Customer imports electricity from, and/or exports electricity to, the Distribution System in a manner which adversely affects or impairs voltage regulation or impairs the flow of electricity through the Distribution System (or in the reasonable opinion of the Company is likely to do so), then the Customer shall at its own expense remedy the condition in a manner deemed adequate in the reasonable opinion of the Company (and, if the condition is not remedied within a reasonable time of the Company giving notice to the Customer of such condition, the Company may forthwith De-energise the Connection Point until such condition has been so remedied), and pay to the Company on demand the full amounts of all costs, losses and expenses caused to the Company thereby.

8.6 Where there is more than one Connection Point, the Customer shall (at its own expense) ensure that there does not exist within the Customer's Installation the facility to parallel across more than one Connection Point, unless expressly agreed in writing by the Company.

Generating Equipment

8.7 If the Customer installs, or arranges for the installation of, Small-Scale Generating Equipment at the Premises, then the Customer must inform the Company of any intention to use the generating equipment in parallel with the Distribution System no later than 20 Working Days after the equipment is commissioned. Provided the Customer so informs the Company, the Customer does not need the Company's consent to install and/or operate Small-Scale Generating Equipment at the Premises.

8.8 Subject to Clause 8.7, the Customer shall notify the Company of any Generating Equipment at the Premises, and shall obtain the Company's prior written consent to the installation and/or operation of any Generating Equipment at the Premises capable of being operated in parallel with the Distribution System.

8.9 Where there is Generating Equipment at the Premises that is used as an emergency back-up source of electricity, it may be utilised provided that it is first isolated from the Distribution System.

Unmetered Supplies

8.10 The Customer shall not permit any Plant or Apparatus of a third party to be connected to the Customer's Installation without the prior written permission of the Company.

8.11 If, in relation to any Connection Point, the Customer fails to comply with Clause 8.10, the Company may exercise its rights under Clause 5 in respect of that Connection Point. Alternatively, if the Customer is unable to remedy the situation within a reasonable time, the Company may require a Modification to be made to the Company's Equipment and/or the Customer's Installation.

9. THE COMPANY'S INSTALLATION AND EQUIPMENT

9.1 Only Authorised Persons will be allowed to operate the Company's Equipment and/or the Monitoring Equipment, and shall only do so in accordance with Good Industry Practice.

9.2 The Customer shall at all times permit the Company to install such Monitoring Equipment as the Company may reasonably require from time to time on the Customer's Installation or the Property.

9.3 The Monitoring Equipment shall always remain the property of the Company, and does not constitute or comprise a Meter (as defined in the BSC).

9.4 This Agreement entitles the Customer's Installation to be Connected for the purpose of receiving electricity from, or exporting electricity to, the Distribution System. Any other use of the Distribution System, including the transmission of data or communications, is strictly prohibited without the prior written consent of the Company. Unless the Company has given such consent, any such use of the Distribution System by the Customer, or relating to the Connection Point, shall be a breach of this Agreement, and the Customer shall pay to the Company on demand the full amount of all costs, losses and expenses caused to the Company as a result of such use.

10. PLANT AND APPARATUS

Prohibition on Interference

10.1 Each Party shall ensure that its agents, employees and invitees do not interfere in any way with any of the Plant or Apparatus of the other Party without the consent of such other Party, except where emergency action has to be taken to protect the health and safety of persons or to prevent material damage to property.

Neither Party shall knowingly do (or omit to do) anything which would cause the other Party to breach the Regulations.

10.2 Subject to Clause 16.2, if either Party breaches Clause 10.1 and as a result any equipment is lost or damaged, the Party in breach shall pay the other Party the amount of any loss, damage and expenses the other Party suffers as a result, unless such loss or damage was caused by fair wear and tear or Force Majeure.

Damage

10.3 The Customer shall at all times take reasonable precautions required to protect the Company's Equipment from damage, and for that purpose shall comply with any reasonable requirements made by the Company from time to time.

10.4 Each Party shall as soon as it becomes aware of the same notify the other Party in writing of any damage to any part of such other Party's equipment (being the Customer's Installation or the Company's Equipment) and shall provide in writing to such other Party (as soon as reasonably possible after the other Party has requested the same) such information relating to the incident giving rise to such damage as the first Party has in its possession, under its control or can obtain on exercising reasonable efforts.

10.5 Where the Company's Equipment is contained within, or adjacent to and directly associated with, the Customer's Installation, the Customer shall be liable for the replacement of any Company's Equipment which has been damaged and which arises from damage to the Customer's Installation; provided that the Customer's liability in respect of the Company's Equipment pursuant to this Clause 10.5 shall not exceed £1,000,000 per incident or series of related incidents.

Control Equipment

10.6 Upon the failure or malfunctioning of Control Equipment, the Customer shall be responsible for implementing substitute control equipment within the Customer's Installations at its cost. At any time the Customer shall be responsible for re-declaring the consumption pattern of the associated Connection Points to reflect any changed pattern of operation in accordance with this Agreement.

11. PROPERTY RIGHTS & ACCOMMODATION

11.1 The Customer shall ensure that the Company is at all times entitled (without cost to it) to:

a. occupy the Property for the purpose of Connecting the Premises (or for the purpose of Connecting the Premises and providing a connection to any other premises);
b. exercise its rights created by (or under) the Property Documents; and
c. upon the expiry or termination of such rights and for so long thereafter as the Premises requires a Connection (whether before or after the termination of this Agreement), exercise such rights upon the same terms as were contained in the Property Documents.

11.2 The Customer shall provide or procure the provision of (at its own expense) such building or other suitable accommodation or facilities as the Company may reasonably require for any of the Company's Equipment and/or the Monitoring Equipment situated at the Property, and the Customer shall (at its own expense) ensure that such accommodation or facilities are kept in good and safe repair and condition (including that they are water tight).

11.3 Where applicable the Customer shall grant free of charge (or procure the grant free of charge by the freehold or leasehold owner as the case may be of the Property) to the Company a lease relating to the accommodation referred to in Clause 11.2, and the Customer shall obtain (or procure the obtaining of) all consents (including any mortgagees, landlords or statutory consents) of any kind necessary to enable such a lease to be validly granted.

11.4 If the lease referred to in Clause 11.3 is not granted, or is terminated forfeited or surrendered (other than by replacement by a substitute lease), then the Company may terminate this Agreement by notice in writing to this effect to the Customer.

11.5 The Company shall not be liable for any breach of this Agreement arising as a result of, or caused by, any breach of the lease referred to in Clause 11.3 by the landlord to it, or any failure by the Customer to comply with its obligation at Clause 11.2 to keep the accommodation in good repair and water tight condition.

12. RIGHTS OF ACCESS

12.1 The Customer shall procure that the Company (and its employees, agents, sub-contractors and/or invitees) shall at all times be given safe and unobstructed access to enter the Property at convenient times (except in the case of emergency, in which case access is permitted at any time) and upon reasonable notice (except in the case of emergency or the reading of Monitoring Equipment, in which case no such notice need be given) for the purpose of exercising the Company's rights, or enforcing the Company's obligations, under this Agreement (and, in particular, for the purposes of: carrying out Connection, Modification, Energisation, De-energisation, and Re-energisation works; installing, inspecting, testing, repairing, renewing, maintaining, isolating, protecting or removing the Company's Equipment and/or the Monitoring Equipment (or any part thereof); and/or otherwise operating the Distribution System). The provisions as to rights of access specified in paragraphs 7 to 10 of Schedule 6 to the Act shall apply to this Agreement. The Company shall ensure that any individuals to whom access is given pursuant to this Clause 12.1 shall comply with all reasonable directions given by the Customer (and its appropriately authorised representatives) as to general safety and site security requirements.

12.2 The Company shall procure that the Customer (and its employees, agents, sub-contractors and/or invitees) shall at all times (subject to suitable supervision by representatives of the Company) be given safe and unobstructed access to enter the Company's Premises at convenient times and upon reasonable notice for the purpose of exercising the Customer's rights, or enforcing the Customer's obligations, under this Agreement (and, in particular, for the purposes of: inspecting, testing, repairing, renewing, maintaining, isolating, protecting or removing the Customer's Installation (or any part thereof)). The Customer shall ensure that any individuals to whom access is given pursuant to this Clause 12.2 shall comply with all reasonable directions given by the Company (and its appropriately authorised representatives) as to general safety and site security requirements.

12.3 Without prejudice to Clause 8.10, the Customer shall procure that the Company (and its employees, agents, sub-contractors and/or invitees) shall at all times be given safe and unobstructed access to, and use of, the Customer's Installation (without charge) in order to provide a supply to (or accept an export from) such third parties as the Customer has agreed (or may agree) to connect to the Customer's Installation.

13. LIMITATION OF CAPACITY

13.1 The Company shall only be obliged to allow the import of electricity from, and/or the export of electricity to, the Distribution System through the Connection Point at levels equal to or below the Maximum Import

Capacity and/or the Maximum Export Capacity (respectively).

13.2 Subject to the other provisions of this Agreement, the Company shall use reasonable endeavours to:

13.2.1 ensure that the Maximum Import Capacity and the Maximum Export Capacity is available at the Connection Point at all times during the period of this Agreement; and

13.2.2 maintain the connection characteristics at the Connection Point.

13.3 The Customer shall ensure that the import of electricity from, and/or the export of electricity to, the Distribution System through the Connection Point does not exceed the Maximum Import Capacity and/or the Maximum Export Capacity (respectively). Where the Customer is unsure of the Maximum Import Capacity and/or the Maximum Export Capacity, it shall contact the Company (and the Company will inform the Customer of the applicable capacities).

13.4 On each occasion that the Customer breaches Clause 13.3 (and without prejudice to the Company's other rights and remedies, including under Clause 5), the Customer shall:

13.4.1 upon written notice from the Company, take the necessary actions to reduce the import and/or export of electricity to within the Maximum Import Capacity and/or the Maximum Export Capacity within the period of time specified in the notice; and

13.4.2 where it wishes to do so, propose a variation to the Maximum Import Capacity and/or the Maximum Export Capacity in accordance with Clause 13.6; or

13.4.3 where it wishes to do so, submit a Modification Application to the Company in accordance with Clause 15.

13.5 Following the occurrence of a breach of Clause 13.3 (and without prejudice to the Company's other rights and remedies, including under Clause 5), the Company shall (to the extent it is unable to recover the relevant amounts from the Registrant) be entitled to charge the Customer (in which case the Customer shall pay forthwith upon demand) such sum as the Company may require for such import or export calculated in accordance with the Company's then current charges.

13.6 Except where a variation requires a Modification, either party may propose a variation to the Maximum Import Capacity and/or Maximum Export Capacity by notice in writing to the other Party. The Company and the Customer shall negotiate in good faith such a variation, but where it is not agreed section 23 of the Act may entitle the Customer to refer the matter to the Authority.

13.7 Any reduction in the Maximum Import Capacity or the Maximum Export Capacity pursuant to Clause 13.6 shall, where the Parties have within the preceding 12 months agreed the Maximum Import Capacity or the Maximum Export Capacity (as applicable), only take effect following the expiry of 12 months from the date of such previous agreement (unless the Company expressly agrees otherwise).

13.7A No reduction in the Maximum Import Capacity or the Maximum Export Capacity pursuant to Clause 13.6 shall have effect prior to the first day of the month following the date of the notice properly given under Clause 13.6, stating the required capacity (being, if the reduction initially requested is not agreed, the request for the reduction which is subsequently agreed).

14. POWER FACTOR AND PHASE BALANCE

14.1 Unless otherwise agreed, the Customer shall at all times ensure that the Power Factor of any import of electricity from, or export of electricity to, the Distribution System through the Connection Point is maintained at or as near to unity as practicable (and, in any event, at not less than 0.95 leading or 0.85 lagging). The Customer shall comply (at its own expense) with such requirements as the Company may make as to the installation by the Customer of such Plant and Apparatus as may be necessary to ensure that the Power Factor is maintained in accordance with this Clause 14.1.

14.2 The Customer shall not allow the Power Factor at the Connection Point to vary such as to cause damage or disturbance to the Distribution System.

14.3 Where connection at the Connection Point is provided through two or more phases, the Customer shall ensure (insofar as is reasonably practicable) that the flow of electricity through the Connection Point is at all times balanced between the phases.

14.4 If the Customer fails to comply with Clause 14.1, 14.2 or 14.3 the Company may in its reasonable discretion and having given such notice as it considers reasonable in the circumstances De-energise the Connection Point until the causes of the failure are remedied. If the Customer is unable to remedy the situation within a reasonable time, the Company may require a Modification to be made to the Company's Equipment and/or the Customer's Installation.

15. MODIFICATIONS

15.1 No Modification may be made by or on behalf of either Party otherwise than in accordance with the provisions of this Clause 15.

15.2 Where the Customer wishes to make a Modification it shall complete and submit to the Company an Application for a Modification.

15.3 The Company shall make a Modification Offer to the Customer as soon as reasonably practicable and in accordance with the requirements of its Electricity Distribution Licence. The Parties shall discuss in good faith the implications of the proposed Modification(s).

15.4 The Modification Offer made by the Company in response to the application will be open for acceptance in accordance with its terms, unless either the Company or the Customer makes an application for determination to the Authority under the Company's Electricity Distribution Licence in which event the Modification Offer shall remain open for acceptance until the date 10 Working Days after the determination by the Authority pursuant to such application. If the Modification Offer is accepted by the Customer, this Agreement shall be varied to reflect the terms of the Modification Offer and the Modification shall proceed according to the terms of this Agreement as varied.

15.5 Where the Company wishes to make a Modification to the Distribution System the Company shall complete and submit to the Customer a Modification Notification and shall advise the Customer of any works which the Company reasonably believes the Customer may have to carry out as a result.

15.6 The Customer may as soon as practicable after receipt of the Modification Notification and (save where the Authority consents to a longer period) within the period stated therein (which shall be sufficient to enable the Customer to assess the implications of the proposed Modification) make an application to the Authority under the Company's Electricity Distribution Licence.

15.7 As soon as practicable after the receipt of the Modification Notification or, if an application to the Authority has been made, the determination by the Authority, and in any event within 2 months thereof, the Customer

shall submit an Application for a Modification to the Company.

15.8 Once an Application for a Modification has been made by the Customer pursuant to Clause 15.7 the provisions of Clauses 15.3 and 15.4 shall thereafter apply.

15.9 Subject to the payment of its reasonable charges (if any) as referred to in this Clause 15.9, the Company undertakes to the Customer to provide all advice and assistance reasonably requested by the Customer to enable the Customer adequately to assess the implications including the feasibility of making a Modification to the Customer's Installation (whether such Modification is to be made at the request of the Company or of the Customer). The charges referred to in this Clause 15.9 are:

15.9.1 if the proposed Modification by the Customer is or may be required as a result of a Modification proposed by the Company, then the Company shall provide such advice and assistance free of charge; or

15.9.2 if the proposed Modification is or may be proposed by the Customer, the Company may charge the Customer such amount as is reasonable in all the circumstances for such advice and assistance.

15.10 The provisions of such advice and assistance shall be subject to any confidentiality obligations binding on the Parties.

15.11 The Company shall have no obligation to compensate the Customer for the cost and expenses incurred by the Customer as a result of any Modification by the Company.

16. LIMITATION OF LIABILITY

16.1 Neither Party shall be liable for any breach of this Agreement directly or indirectly caused by Force Majeure.

16.2 Subject to Clause 16.3 and save where any provisions of this Agreement provide for an indemnity, neither Party (the “Party Liable”) nor any of its officers, employees or agents shall be liable to the other Party for any loss arising under or in relation to this Agreement (whether for breach of this Agreement, in tort or otherwise) other than for loss directly resulting from a breach of this Agreement and which at the date hereof was reasonably foreseeable as not unlikely to occur in the ordinary course of events from such breach in respect of:

16.2.1 physical damage to the property of the other Party, its officers, employees or agents; and/or

16.2.2 the liability of such other Party to any other person for loss in respect of physical damage to the property of any person,

provided that:

16.2.3 the liability of either Party in respect of claims for such loss shall in no circumstance exceed one million pounds (£1,000,000) per incident or series of related incidents;

16.2.4 where such incident or series of related incidents entitles the Customer to claim compensation from the Company under this Agreement and any other agreement (including any other connection agreement), the Company's aggregate liability under this Agreement and all such other agreements in respect of that incident or series of related incidents shall not exceed one million

pounds (£1,000,000), irrespective of whether the Customer has claimed under this Agreement and/or any such other agreement; and

16.2.5 where such incident or series of related incidents entitles any person other than the Customer to claim compensation from the Company under a connection agreement relating to the Premises, the Company's aggregate liability under this Agreement and all such other connection agreements in respect of that incident or series of related incidents shall not exceed one million pounds (£1,000,000), and the Company's liability under this Agreement will be pro-rated accordingly.

16.3 Nothing in this Agreement shall exclude or limit the liability of the Party Liable for death or personal injury resulting from the negligence of the Party Liable, or any of its officers, employees or agents and the Party Liable shall indemnify and keep indemnified the other Party, its officers, employees or agents from and against all such and any loss or liability which such other Party may suffer or incur by reason of any claim on account of death or personal injury resulting from the negligence of the Party Liable, or any of its officers, employees or agents.

16.4 Subject to Clause 16.3, neither Party, nor any of its officers, employees or agents shall in any circumstances whatsoever be liable to the other Party for any:

16.4.1 loss of profit, loss of revenue, loss of use, loss of contract or loss of goodwill;

16.4.2 indirect or consequential loss; or

16.4.3 loss resulting from the liability of such other Party to any other person however and whenever arising except under Clause 16.2.2,

and, for the avoidance of doubt, the Company shall have no liability to the Customer to pay to any person the DGNU Payment unless by prior agreement in writing.

16.5 The rights and remedies provided by this Agreement to the Parties are exclusive and not cumulative and exclude and are in place of all substantive (but not procedural) rights or remedies express or implied and provided by common law or statute in respect of the subject matter of this Agreement, including without limitation any rights either Party may possess in tort which shall include without limitation actions brought in negligence and/or nuisance. Accordingly, each Party hereby waives to the fullest extent possible all such rights and remedies provided by common law or statute, and releases the Company to the same extent from all duties, liabilities, responsibilities or obligations provided by common law or statute in respect of the matters dealt with in this Agreement and undertakes not to enforce any of the same except as expressly provided herein.

16.6 Save as otherwise expressly provided in this Agreement, this Clause 16 insofar as it excludes or limits liability shall override any other provision of this Agreement, provided that nothing in this Clause 16 shall exclude or restrict or otherwise prejudice or affect any of:

16.6.1 the rights, powers, duties and obligations of either Party which are conferred or created by the Act, (or any subordinate legislation made under it), the Electricity Distribution Licence, or the Regulations; or

16.6.2 the rights, powers, duties and obligations of the Authority or the Secretary of State under the Act, the Electricity Distribution Licence or otherwise howsoever.

16.7 Each of the Clauses of this Clause 16 shall:

16.7.1 be construed as a separate and severable contract term, and if one or more of such Clauses is held to be invalid, unlawful or otherwise unenforceable the other or others of such Clauses shall remain in full force and effect and shall continue to bind the Parties; and

16.7.2 survive termination of this Agreement.

16.8 Each of the Parties agrees that the other Party holds the benefit of Clauses 16.2 and 16.3 for itself and as trustee and agent for its officers, employees and agents.

16.9 Nothing in this Clause 16 shall be construed so as to prevent the Company from bringing an action in debt against the Customer.

16.10 Where the Company is an EDNO and the Customer has made an Election in respect of certain Items:

16.10.1 the Company shall be liable for the acts and omissions of the Host DNO in its role as UMSO for those Items as if they were the Company's own acts and omissions; and

16.10.2 without prejudice to Clause 16.10.1, the Host DNO shall have no liability to the Customer for any acts or omissions by the Host DNO in its role as UMSO for those Items.

17. DISTRIBUTION CODE & UNMETERED SUPPLIES PROCEDURE

17.1 Each Party undertakes to comply with all the provisions of the Distribution Code applicable to it.

17.2 In the event of any conflict between this Agreement and the Distribution Code, the Distribution Code shall prevail.

17.3 The Company and the Customer shall at all times comply with the Unmetered Supplies Procedure as if it was incorporated into this Agreement.

18. PAYMENTS

18.1 Unless otherwise stated, each Party shall pay any and all amounts due to the other Party under this Agreement within 30 days of the date of invoice.

18.2 If any amount owing by one Party to the other under the terms of this Agreement remains unpaid after the due date for payment, the Party to whom the amount is owed shall be entitled to recover interest thereon at the rate provided for by the Late Payment of Commercial Debts (Interest) Act 1998. The Party to whom the amount is owed shall also be entitled to recover the fixed sum provided for by that Act.

18.3 All amounts payable under this Agreement are exclusive of value added tax and value added tax may be added at the applicable rate.

19. ASSIGNMENT AND SUB-CONTRACTING

19.1 Subject to Clauses 19.2, 19.3 and 19.4, neither Party shall assign (or otherwise transfer) its benefit or burden under this Agreement without the prior written consent of the other Party, such consent not to be unreasonably withheld or delayed.

19.2 Either Party may assign or charge its benefit under this Agreement in whole or in part by way of security.

19.3 The Company shall be entitled, without the consent of the Customer, to assign its rights and/or obligations under this Agreement, whether in whole or in part, where such assignment is to an Affiliate.

19.4 Either Party shall be entitled, without the consent of the other Party, to sub-contract its obligations under this Agreement. The sub-contracting by the Company or the Customer of the performance of any obligations or duties under this Agreement or of any activities envisaged by the Distribution Code shall not relieve the Company or the Customer (as the case may be) from liability for the performance (or non-performance) of such obligation or duty.

20. EVENTS OF DEFAULT AND TERMINATION

Automatic Termination

20.1 This Agreement will automatically terminate in respect of a Connection Point where one or more of the following occurs:

20.1.1 the Customer and the Company agree a replacement connection agreement in respect of the Connection Point; or

20.1.2 the Connection Point is Disconnected.

Termination on notice

20.2 Either Party may terminate this Agreement by giving the other not less than one month's notice in writing; provided that the Company may only give such notice where it (or its appointed UMSO) no longer considers that the Customer's Installation is appropriate for Unmetered Supplies and it (or its UMSO) withdraws the Unmetered Supply Certificate.

Termination for breach or financial difficulty

20.3 The Company may immediately terminate this Agreement by giving notice of such termination to the Customer in the event that one or more of the following occurs (and is continuing):

20.3.1 the Customer fails to pay any amount properly due and owing to the Company pursuant to this Agreement, and such failure is not remedied within 5 Working Days of receiving written notice from the Company of the occurrence thereof and requiring the same to be remedied;

20.3.2 the Customer fails in any material respect to perform or comply with any of its obligations under this Agreement, and (only if the breach is capable of remedy) it is not remedied to the reasonable satisfaction of the Company within 20 Working Days of receiving written notice from the Company of the occurrence thereof and requiring the same to be remedied; or

20.3.3 any of the following occurs:

A. an interim order or bankruptcy order is made in respect of the Customer under the Insolvency Act 1986 or a voluntary arrangement is proposed in respect of the Customer;
B. an order of the High Court is made or an effective resolution passed for the insolvent winding-up or dissolution of the Customer;
C. a receiver (which expression shall include an administrative receiver within the meaning of section 29 of the Insolvency Act 1986) of the whole or any material part of the assets or

undertaking of the Customer is appointed;

D. an administration order under section 8 of the Insolvency Act 1986 is made or if a voluntary arrangement is proposed under section 1 of that Act in respect of the Customer; or

E. the Customer enters into any scheme of arrangement (other than for the purpose of reconstruction or amalgamation upon terms previously approved in writing by the Company); or

F. the Customer is unable to pay its debts (within the meaning of section 123(1) or (2) of the Insolvency Act 1986),

and (to the extent relevant) within 20 Working Days of an appointment, the trustee in bankruptcy, liquidation, receiver, administrative receiver, administrator, nominee or other similar officer has not provided to the Company a guarantee of future performance by the Customer of this Agreement in such form and amount as the Company may reasonably require.

Consequences of Termination

20.4 The ending or termination of this Agreement (by either Party and for whatever reason) shall not affect any of the rights, remedies or obligations of either Party that have accrued prior to such ending or termination, or any of the provisions of this Agreement that are expressly (or by implication) intended to survive such ending or termination.

20.5 Upon the ending or termination of this Agreement (by either Party and for whatever reason):

20.5.1 the Company may De-energise and/or Disconnect the Connection Point;

20.5.2 the Customer shall allow the Company (at its sole option) to enter the Property in order to remove the Company's Equipment (or any part of it); and/or

20.5.3 the Customer shall pay to the Company all sums then due and payable or accrued due under this Agreement, and any reasonable costs incurred by the Company in Disconnecting the Connection Point and removing the Company’s Equipment (or any part of it).

21. FORCE MAJEURE

21.1 If either Party shall be unable to carry out any of its obligations under this Agreement due to a circumstance of Force Majeure this Agreement shall remain in effect but save as otherwise provided herein both Parties' obligations other than any obligation as to payment of charges shall be suspended without liability for a period equal to the circumstance of Force Majeure provided that:

21.1.1 the Party affected by the Force Majeure promptly gives the other Party written notice describing the circumstance of the Force Majeure (including the nature of the occurrence and its expected duration) and, where reasonably practicable, continues to furnish regular reports with respect thereto during the period of the Force Majeure;

21.1.2 the suspension of performance is of no greater scope and of no longer duration than is required by the Force Majeure;

21.1.3 no obligations of either Party that arose before the Force Majeure causing the suspension of performance are excused as a result of the Force Majeure; and

21.1.4 the non-performing Party uses all reasonable efforts to remedy its inability to perform.

22. DISPUTES RESOLUTION

22.1 Without prejudice to the rights of the Parties given in the Electricity Distribution Licence or the Act in respect of dispute resolution (including as referred to in Clauses 13.6, 15.4 and 23.2), the Parties shall not be obliged to submit any dispute, difference or question arising under or in connection with this Agreement to any prescribed method of resolution but shall be entitled, in the event of a failure to agree between them on a method of dispute resolution, to commence such proceedings or make such reference as they may competently pursue.

23. VARIATIONS

23.1 The National Terms of Connection (and therefore this Agreement) will be changed automatically to incorporate any changes which are approved by the Authority pursuant to the DCUSA. Notice of any change which is approved will be advertised in the national press, and the new terms will be published on the internet at www.connectionterms.co.uk.

23.2 Either Party may, at any time, ask the other to enter into an alternative connection agreement in respect of the Premises if it believes an alternative agreement is needed because of the nature or use of the Connection Point and/or the Premises. Each Party shall negotiate in good faith the terms of any such alternative agreement. If an alternative agreement has not been agreed within 1 month of its being proposed, either Party may refer the matter to the Authority for resolution pursuant to section 23 of the Act. The Parties shall give effect to any such determination, and shall enter into any agreement as shall be necessary to give effect to any such determination.

24. NOTICES

24.1 Any notice, demand, certificate or other communication required to be given or sent under this Agreement shall be in writing and delivered by hand, by first class post or by email.

24.2 Subject to Clause 24.3, the required address for the delivery of notices to the Company shall be its registered address (in which case delivery must be by hand or by first class post), and for delivery to the Customer shall be the Premises or its registered or principal business address (in which case delivery must be by hand or by first class post).

24.3 Either Party may, from time to time, notify the other in accordance with this Clause 24 of the address and/or email address at which the first Party will accept delivery of notices for the purposes of this Agreement.

24.4 A notice or other form of communication shall be deemed to have been served and received as follows:

24.4.1 if given or delivered by hand, at the time when given or delivered;

24.4.2 if sent by first class post, at the expiration of two Working Days after the document was delivered (bearing the correct address and being pre-paid) into the custody of the postal authorities; and

24.4.3 if sent by email, at the time when delivered to the recipient's email server.

25. GENERAL

25.1 This Agreement, and any documents referred to in it, contains the entire agreement between the Parties in relation to its subject matter. Each of the Parties irrevocably and unconditionally waives any right it may have

to claim damages for, and/or to rescind this Agreement because of, breach of any warranty not expressly contained, or referred to, in this Agreement, or any misrepresentation whether or not contained in this Agreement, unless such misrepresentation was made fraudulently.

25.2 None of the provisions of this Agreement shall be considered waived by either Party except when such waiver is given in writing. No delay by or omission of either Party in exercising any right, power, privilege or remedy under this Agreement or the Distribution Code shall operate to impair such right, power, privilege or remedy or be construed as a waiver thereof. Any single or partial exercise of any such right, power, privilege or remedy shall not preclude any other future exercise thereof or the exercise of any other right, power, privilege or remedy.

25.3 If any provision of this Agreement is or becomes or is declared invalid, unenforceable or illegal by a Competent Authority, such invalidity, unenforceability or illegality shall not prejudice or affect the remaining provisions of this Agreement which shall continue in full force and effect notwithstanding such invalidity, unenforceability or illegality.

25.4 Each Party's officers, employees and agents shall have the benefit of, and be able to enforce, Clauses 16.2 and 16.3. Where the Company is an EDNO and the Customer has made an Election, the Host DNO shall have the benefit of, and be able to enforce, Clause 16.10. Subject to this Clause 25.4, the Parties do not intend that any provision of this Agreement will be enforceable by a third party (whether by virtue of the Contracts (Rights of Third Parties) Act 1999 or otherwise). Notwithstanding that a person who is not a Party may have a right to enforce particular Clauses under the Contracts (Rights of Third Parties) Act 1999 in accordance with this Clause 25.4, the Parties may vary or terminate this Agreement in accordance with its terms without requiring the consent of any such person.

26. GOVERNING LAW AND JURISDICTION

26.1 Subject to Clause 26.2, this Agreement will be governed by, and interpreted in accordance with, the laws of England and Wales, under the jurisdiction of the English and Welsh courts.

26.2 If the Connection Point is located in Scotland (except where the Company is Northern Powergrid (Northeast) plc (a company incorporated in England & Wales with company number 2906593) or Electricity North West Limited (a company incorporated in England & Wales with company number 2366949)), this Agreement will be governed by, and interpreted in accordance with, Scots law, under the jurisdiction of the Scottish courts.

For information: supply characteristics

As required by law, the electricity delivered to the Premises through the Distribution System will normally be at one of the voltages (and will have the technical characteristics) set out below:

- At 230 volts nominal alternating voltage: normally a single-phase supply, with a permitted range of voltage variation from plus 10% to minus 6%.
- At 400 volts nominal alternating voltage: normally a three-phase supply, with a permitted range of voltage variation from plus 10% to minus 6%.
- At a nominal alternating voltage equal to or greater than 1000 volts but less than 132,000 volts: normally a three-phase supply, with a permitted range of voltage variation from plus 6% to minus 6%. For the avoidance of doubt this range includes not exhaustively Connection Points with a nominal alternating voltage of 3,300, 6,600, and 11,000 volts.

- At all of the above voltages: the supply frequency will be 50 hertz, with a permitted nominal variation of plus or minus 1%.

SCHEDULE 2C - SUGGESTED BESPOKE CONNECTION AGREEMENT

The following form of agreement is produced for information only. It is an example of the type of agreement that DNO/IDNO Parties may wish to use when contracting on connection terms that refer to the National Terms of Connection. There is no obligation on DNO/IDNO Parties to contract on connection terms that refer to the National Terms of Connection, or to use the following form of agreement when they choose to do so.

BESPOKE CONNECTION AGREEMENT

BETWEEN:

(1) [Distributor Name]

[Company Number]

[Registered Address]

(the "**Company**")

AND

(2) [Connectee Name]

[Company Number]

[Registered Address]

(the "**Customer**")

1 The Company agrees to the Connection of the Customer's Installation to the Company's Distribution System on the terms and conditions of this Bespoke Connection Agreement.

2 Subject to the express provisions of this Bespoke Connection Agreement, [Section 2] / [Section 3] / [Section 4] of the National Terms of Connection (the "Applicable NTC Section") will apply (as amended from time to time) as if it was set out in this Bespoke Connection Agreement, and as if references in the Applicable NTC Section to "this agreement" or to "this Agreement" were to this Bespoke Connection Agreement.

3 The National Terms of Connection are available in writing from the Energy Networks Association, 1st Floor, 4 More London Riverside, London, SE1 2AU, or from the website at www.connectionterms.co.uk.

4 The [Customer's attention is drawn specifically to clauses [TBC] of the Applicable NTC Section, and the] Customer confirms that it has read and fully understands the Applicable NTC Section.

5 Expressions used in this Bespoke Connection Agreement shall have the same meanings as is given to them in the Applicable NTC Section.

6 Details of the Premises, the Connection Points, the technical characteristics of the Connection Points and other matters are set out in the appendices to this Bespoke Connection Agreement.

7 The Parties may agree variations to this Bespoke Connection Agreement, which variations must be recorded in writing and signed by an authorised representative of each Party. Each Party shall negotiate in good faith the terms of any variation proposed by the other. If any variation has not been agreed within 1 month of its being proposed, either Party may refer the matter to the Authority for resolution pursuant to section 23 of the

Act. The Parties shall give effect to any such determination, and shall enter into any agreement as shall be necessary to give effect to any such determination.

8 Address for notices

(a) to the Company: for the attention of [name], [address]

(b) to the Customer: for the attention of [name], [address]

9 Notwithstanding the Applicable NTC Section, the following special conditions shall apply: [**TBC**].

SIGNED by (signature) .....

for and on behalf of the Company (print name) .....

(job title) .....

(date) .....

SIGNED by (signature) .....

for and on behalf of the Customer (print name) .....

(job title) .....

(date) .....

APPENDIX 1 - GENERAL PARTICULARS OF THE CONNECTION

1 Except as set out in paragraph 2 below, the characteristics of the connection(s) shall be as follows:

(a)	characteristics of supply:				
	(i)	number of phases: [Number]			
	(ii)	current: [Alternating current]			
	(iii)	voltage: [Enter Statutory Voltage kV ± 6% / +10%/-6%]			
	(iv)	frequency: [50 Hertz ± 1%]			
(b)	Connection Point(s): either				
	(i)	where connection is provided from the Company's final cut-out fuse, isolator, switch, metering switch fuse or metering circuit breaker, unless otherwise stated in this Bespoke Connection Agreement the Connection Points are the outgoing terminals of the Company's final cut-out fuse, isolator, switch, metering switch fuse or metering circuit breaker, or			
	(ii)	where the Company's electric lines connect directly to a Customer's intake isolator, switch, metering switch fuse or metering circuit breaker, unless otherwise stated in this Bespoke Connection agreement the Connection Points are the incoming terminals of the Customer's intake isolator, switch, metering switch fuse or metering circuit breaker			
	and, for the avoidance of doubt, the Connection Points may be remote from the Customer's Installation where third party electric lines and/or electric plant provide the intermediate electrical connection from the Company's Distribution System to the Customer's Installation.				
(c)	use of system tariff type: [state here or else "Rates published in relevant charging statement"]				
(d)	Details of Premises:				
	(a)	Address:		[SITE ADDRESS HERE]	
		(i)	Import MPANs:	[IMPORT MPANS HERE]	
		(ii)	Export MPANs:	[EXPORT MPANS HERE]	
	(b)	Commencement Date:		[COMMENCEMENT DATE DD/MM/YYYY HERE]	
	(c)	Capacity Details:			
		(i)	Maximum Import Capacity:	kVA	With effect from

				[kVA]	[DD/MM/YYYY]
		(ii)	First date for Reduction of Maximum Import Capacity:	[DD/MM/YYYY]	
		(iii)	Maximum Export Capacity:	kVA	With effect from
				[kVA]	[DD/MM/YYYY]
		(iv)	First date for Reduction of Maximum Export Capacity:	[DD/MM/YYYY]	

APPENDIX 2 - TECHNICAL CONDITIONS

Part 1 - Connection Points

Part 2 - Technical Supply Capacities and Sole Use Assets

Part 3 - Site Responsibility Schedules

Part 4 - Site Specific Operating Arrangements

Part 5 - Site Specific Technical Conditions

Part 6 - Geographic Plans

Part 7 - Operational Diagrams

Part 8 - Generating Equipment

Part 9 - Technical Derogations

Part 10 - Property Documents

SCHEDULE 2D - CURTAILABLE CONNECTIONS

1. SCOPE

1.1 This Schedule sets out the methodology for defining curtailable access arrangements (i.e. a Curtailable Connection); specifically:

a. how the Company will determine the Curtailment Limit;

b. how the Company will measure Curtailment;

c. reporting requirements on the Company to Customers regarding their Curtailable Connections;

d. measures to be taken by the Company to avoid exceeding the Curtailment Limit, and what happens if the Company exceeds the Curtailment Limit;

e. how the Exceeded Curtailment Price is determined; and

f. end dates for converting a Curtailable Connection into a Non-Curtailable Connection.

1.2 This Schedule applies only to DNO/IDNO Parties (each of which is referred to in this Schedule as the Company).

1.3 This Schedule does not apply to connection offers for: (a) domestic and non-domestic Customers that are billed on an aggregated and non-site-specific basis or who are metered directly using whole current meters; or (b) Unmetered Supplies.

1.4 A Curtailable Connection will only be offered where the Company has identified a requirement for Reinforcement to facilitate provision of the requested connection, and where the Curtailment will provide a network benefit. Reinforcement required solely for fault level and reactive power requirements is not suitable for a Curtailable Connection, because the Curtailment would not provide any network benefit.

1.5 When offering a Curtailable Connection, the Company will also provide (if not provided already) the supporting information on the expected costs of a Non-Curtailable Connection.

2. SETTING THE CURTAILMENT LIMIT

2.1 Unless otherwise directed by the Authority, the Import Curtailment Limit and Export Curtailment Limit will be determined by assessing the parts of the existing Distribution System that require reinforcement under the Minimum Scheme, in accordance with Paragraphs 2.3 to 2.8.

2.2 If the Authority directs the Company to use an alternative approach to determine either the Import Curtailment Limit and/or the Export Curtailment Limit for a Customer, then the Company shall provide to the Customer details of the methodology and data used in the calculation.

Input data

2.3 The following data shall be used for the calculation of the Curtailment Limit.

a. Profile data (in/converted to kVA based on an assumed 0.95 power factor) relating to the most recent 12 months of available data, including:

i. annual half-hourly observed/measured data from the asset to be reinforced;

ii. half-hourly metered data from generation connected to or downstream of the asset to be reinforced;

iii. half-hourly representative daylight profile (1 to signify day, 0 to signify night) for the asset to be reinforced; and

iv. half-hourly data from battery storage connected to or downstream of the asset to be reinforced,

or equivalent data from other sources. The Company shall correct for missing data, erroneously shown negative values and abnormal running arrangements and/or similar anomalies. Where data for the asset is not available, data from the following shall be used (A) the feeding primary substation for HV and LV assets, (B) the relevant bulk supply point for 33kV and 66kV assets, and (C) the relevant grid supply point data for 132kV assets.

b. For a Demand Connection, the following data (in kVA unless otherwise stated) shall also be used for the calculation of the Import Curtailment Limit:

i. Network Asset Demand Capacity, being the capacity based on the Company's assessment of the thermal ratings, voltage change and upstream restrictions and compliance with its relevant design, planning and security of supply policies

ii. Inflight Demand Acceptances, being the aggregated Maximum Import Capacity of all connection offers that utilise the asset being assessed but have yet to be connected/energised and hence are not included in the current maximum demand;

iii. Largest Inflight Demand Offers, being the aggregate Maximum Import Capacity of the two largest connection offers that utilise the asset being assessed that have been issued to a Customer but have yet to be accepted;

iv. Other Inflight Demand Offers, being the aggregated Maximum Import Capacity of all other connection offers that utilise the asset being assessed that have been issued to a Customer but have yet to be accepted;

v. Demand Confidence Factor, being a confidence factor representing the likelihood of the Other Inflight Demand Offers being accepted by Customers, which has the value 50%; and

vi. New Demand Connection Capacity, being the requested Maximum Import Capacity of the connection for which the Curtailment Limit is being calculated.

However, for meshed networks, the figures applying under sub-paragraphs (ii), (iii), (iv) and (vi) above may be adjusted by a factor determined through power flow analysis to reflect the extent the asset being assessed is utilised by these connections.

c. For a Generation Connection, the following data (in kVA unless otherwise stated) shall also be used for the calculation of the Export Curtailment Limit:

i. Network Asset Generation Capacity, being the capacity based on the Company's assessment of the thermal ratings, voltage change and upstream restrictions and compliance with its relevant design, planning and security of supply policies;

ii. Inflight Generation Acceptances, being the aggregated Maximum Export Capacity of all connections offers that utilise the asset being assessed but have yet to be connected/energised and hence are not included in the current maximum generation/minimum demand. The aggregated values shall be categorised as either PV Generation or Non-PV Generation;

iii. Largest Inflight Generation Offers, being the aggregate Maximum Export Capacity of the two largest connection offers that utilise the asset being assessed that have been issued to a Customer but not have to be accepted. The aggregated values shall be categorised as either PV Generation or Non-PV Generation;

iv. Other Inflight Generation Offers, being the aggregated Maximum Export Capacity of all other connection offers that utilise the asset being assessed that have been issued to a Customer but have yet to be accepted. The aggregated values shall be categorised as either PV Generation or Non-PV Generation;

v. Generation Confidence Factor, being a confidence factor representing the likelihood of the Other Inflight Generation Offers being accepted by the Customers, which has the value 50%; and

vi. New Generation Connection Capacity, being the requested Maximum Export Capacity of the connection for which the Curtailment Limit is being calculated. This shall be categorised as either PV Generation or Non-PV Generation.

However, for meshed networks, the figures applying under sub-paragraphs, (ii), (iii), (iv) and (vi) may be adjusted by a factor determined through power flow analysis to reflect the extent the asset being assessed is utilised by these connections.

d. Curtailment Threshold, being the percentage of the Network Asset Demand Capacity or Network Asset Generation Capacity, which, if exceeded by the Committed Demand Capacity or Committed Generation Capacity, will determine the number of hours where curtailment may be required, which is set at 95%.

Calculating the Import Curtailment Limit

2.4 The following process shall be used for the calculation of the Import Curtailment Limit.

a. The underlying true demand will be assessed as follows:

i. Take the annual half-hourly observed/measured data, from the asset as calculated in accordance with Paragraph 2.3(a)(i).

ii. Adjust for 'latent demand' by subtracting data from half-hourly metered generation (negative values) connected to the asset as provided in accordance with Paragraph 2.3(a)(ii).

iii. This gives annual half-hourly true (gross) demand profile. For cases where this demand profile is not available at the asset in question (for example, because it is available at substation level and not at circuits supplied by that substation), the true (gross) demand profile can be scaled to the expected maximum and minimum true demand of the asset in question.

iv. Take this true (gross) demand profile, and subtract the import data for half-hourly battery storage connected to the asset (provided in accordance with Paragraph 2.3(a)(iv)) to calculate the underlying true demand profile (baseline).

v. Adjust for battery storage (if any) that currently utilises the asset to be reinforced by adding the maximum import from the import data for half-hourly battery storage connected to the asset (provided in accordance with Paragraph 2.3(a)(iv)). This is added to the underlying true demand profile (baseline) as a continuous constant profile.

b. The underlying true demand profile calculated under Paragraph (v) is then sorted in descending order to produce the underlying true demand duration curve.

c. Calculate the Committed Demand Capacity for each half-hour as follows:

i. Take the adjusted demand duration curve under Paragraph 2.4(b).

ii. Add the Maximum Import Capacity of Inflight Demand Acceptances and the Largest Inflight Demand Offers, plus the Other Inflight Demand Offers multiplied by the Demand Confidence Factor (as each such expression is defined in Paragraph 2.3(b)).

iii. Add the Maximum Import Capacity of the new connection for which the Curtailment Limit is being calculated.

iv. The sum of (i) to (iii) above is then divided by the Network Asset Demand Capacity to represent it as a percentage of the firm capacity of the asset.

d. The Import Curtailment Limit will be determined by assessing the number of hours for which demand exceeds the capacity threshold as follows:

i. Quantify the number of hours that the Committed Demand Capacity relative to the Network Asset Demand Capacity exceeds the Curtailment Threshold.

ii. If the true demand profile does not correspond to a whole year, the calculated hours from the previous step is divided by the number of hours in the true demand profile to determine the percentage curtailed. This is then multiplied by 8760 to determine an annual figure for the Import Curtailment Limit.

e. Where multiple assets require reinforcement, the Import Curtailment Limit for each asset will be calculated and the largest value so calculated will be used as the Import Curtailment Limit.

Calculating the Export Curtailment Limit

2.5 The Export Curtailment Limit will be calculated as follows.

a. Assessment of underlying generation:

i. Take the underlying true demand profile (baseline) as calculated in accordance with Paragraph 2.4(a)(iv) and add in the annual half-hourly generation from assets (generation is treated as negative values) as provided under with Paragraph 2.3(a)(ii). The generation data may need to be scaled to the expected output of the generation where this profile is not available at the asset in question (for example, because it is available at substation level and not at circuits supplied by that substation), in which case the generation profile can be scaled to the expected maximum gross generation (excluding battery charging) of the asset in question.

ii. This gives annual half-hourly generation profile without the effects of battery charging.

b. The Committed Generation Capacity will then be calculated as follows:

i. Take the generation profile determined under Paragraph 2.5(a)(ii).

ii. Add the Maximum Export Capacity (expressed as a negative value) of Inflight Generation Acceptances and the Largest Inflight Generation Offers, plus the Other Inflight Generation Offers multiplied by the Generation Confidence Factor (as each such expression is defined in Paragraph 2.3(c)). PV Generation is only added to half-hourly periods where it is daylight by multiplying the PV Generation data by the representative daylight profile provided under Paragraph 2.3(a)(iii).

iii. Add the Maximum Export Capacity (expressed as a negative value) of the connection for which the Curtailment Limit is being calculated. PV Generation is only added to half-hourly periods where it is daylight by multiplying the PV Generation data by the representative daylight profile provided under Paragraph 2.3(a)(iii).

iv. The sum of (i) to (iii) above is then divided by the Network Asset Generation Capacity to represent it as a percentage of the firm capacity of the asset.

c. The Committed Generation Capacity as a percentage of the Network Asset Generation Capacity calculated under Paragraph 2.5(b)(iv) is then sorted in descending order to produce the committed generation duration curve.

d. The Export Curtailment Limit is determined by assessing the number of hours reverse power flows exceed the capacity threshold, as follows:

i. Quantify the number of hours that the Committed Generation Capacity relative to the Network Asset Generation Capacity exceeds the Curtailment Threshold.

ii. If the generation profile (excluding battery charging) does not correspond to a whole year, the calculated hours from the previous step is divided by the number of hours in the profile to determine the percentage curtailed. This is then multiplied by 8760 to determine an annual figure for the Export Curtailment Limit.

e. Where multiple assets require reinforcement, the Export Curtailment Limit for each asset will be calculated and largest value used for the Export Curtailment Limit.

General

2.6 The Curtailment Limit(s) applying to a connection offer (and to the Curtailable Connection Agreement pursuant to that offer) will not be recalculated once the connection offer has been issued to the Customer; unless there has been material change in circumstances and both the Company and the Customer agree to the recalculation or the Authority directs that a different Curtailment Limit is to be used. Where the Company and Customer cannot agree, the matter should be resolved through the disputes process set out in the Curtailable Connection Agreement.

2.7 A worked example of a calculation modelling tool will be published and made available on the Website.

2.8 The Company may use whatever software tool it chooses providing it gives the same answer as the tool described in Paragraph 2.7. The Company should make available data used in its calculations when requested by the Customer.

3. MEASURING CURTAILMENT

Quarterly Reporting

3.1 The Full Import Curtailment Hours for each Curtailable Connection shall be calculated as follows at the end of each Quarter for that Quarter and the previous three Quarters (i.e., a rolling four Quarters):

$$= \sum_{i=1}^{n} \times \mathbf{di_i} \times \mathbf{civ_i} \div \mathbf{cic}$$

where,

di	=	the duration of each period of Curtailment (in hours, partial or full) determined from the time at which the Company instructs the Customer to Curtail its Maximum Import Capacity to the time at which the Company notifies the Customer that there is no longer a requirement to Curtail;
n	=	the number of Curtailment instructions in those four Quarters;
civ	=	the Curtailment Instruction Value for each Curtailment instruction; and
cic	=	the Curtailable Import Capacity.

3.2 The Full Export Curtailment Hours for each Curtailable Connection shall be calculated as follows at the end of each Quarter for that Quarter and the previous three Quarters (i.e., a rolling four Quarters):

$$= \sum_{i=1}^{n} \times \mathrm{de_i} \times \mathrm{civ_i} \div \mathrm{cec}$$

where,

de	=	the duration of each period of Curtailment (in hours, partial or in full) determined from the time at which the Company instructs the Customer to Curtail its Maximum Export Capacity to the time at which the Company notifies the Customer that there is no longer a requirement to Curtail;
n	=	the number of Curtailment instructions in those four Quarters;
civ	=	the Curtailment Instruction Value for each Curtailment instruction; and
cec	=	the Curtailable Export Capacity.

Annual Payment

3.3 At the end of every fourth Quarter (ending after energisation of the connection), if the Full Import Curtailment Hours exceed the Import Curtailment Limit, then the Company shall make a payment to the Customer (within 30 days following the end of such fourth Quarter), with the payment amount calculated as follows:

$$= (fich - icl) \times cic \times eicp$$

where,

fich	=	the Full Import Curtailment Hours;
icl	=	the Import Curtailment Limit;
cic	=	Curtailable Import Capacity (MVA); and
eicp	=	the Exceeded Import Curtailment Price at the end of such fourth Quarter.

3.4 At the end of every fourth Quarter (ending after energisation of the connection), if the Full Export Curtailment Hours exceeds the Export Curtailment Limit, then the Company shall make a payment to the Customer (within 30 days following the end of such fourth Quarter), with the payment amount calculated as follows:

$$= (fech - ecl) \times cec \times eecp$$

where,

fech	=	the Full Export Curtailment Hours;
ecl	=	the Export Curtailment Limit;
cec	=	Curtailable Export Capacity (MVA); and

eecp	=	the Exceeded Export Curtailment Price at the end of such fourth Quarter.

4. CURTAILMENT REPORTING

4.1 Where a Customer has been subject to Curtailment within a Quarter, the Company shall notify the Customer of the number of Full Import Curtailment Hours and/or Full Export Curtailment Hours that the Customer has been instructed to make.

4.2 Each such notification shall be made within 30 days after the end of the Quarter, and shall include:

a. each period of Curtailment during the Quarter (with start and end dates and times); and

b. the applicable Exceeded Curtailment Price.

5. EXCEEDING CURTAILMENT LIMITS

5.1 The Company shall use reasonable endeavours to provide the required network capacity or procure Distribution Flexibility Services such that the Full Import Curtailment Hours do not exceed the Import Curtailment Limit and the Full Export Curtailment Hours do not exceed the Export Curtailment Limit.

5.2 The Company shall use reasonable endeavours to notify the Customer in advance if it appears likely that the Full Import Curtailment Hours and/or Full Export Curtailment Hours will exceed the Import Curtailment Limit and/or Export Curtailment Limit respectively.

5.3 If the Company fails to notify a Customer in advance, the Company shall use reasonable endeavours to notify the Customer as soon as reasonably possible after the event.

6. EXCEEDED CURTAILMENT PRICE

6.1 Unless otherwise directed by the Authority, the Exceeded Import Curtailment Price and Exceeded Export Curtailment Price shall be determined by the Company in accordance with this Paragraph 6.

6.2 The Exceeded Import Curtailment Price applies to demand turn down/generation turn up and the Exceeded Export Curtailment Price applies to demand turn up/generation turn down.

6.3 An IDNO Party should use the Exceeded Import Curtailment Price and the Exceeded Export Curtailment Price determined by the DNO Party in whose Distribution Services Area a Customer is seeking to connect to the Distribution System of that IDNO Party.

Market prices for flexibility

6.4 From 1 April 2023, and then by the first Working Day of each April and October thereafter, each DNO Party shall determine the Flexibility Market Import Price (in £/MWh) and the Flexibility Market Export Price (in £/MWh).

6.5 The Flexibility Market Import Price shall be one of the following (as applicable):

a. the highest contracted price for pre-fault Distribution Flexibility Services, for demand turn down/generation turn up, under contracts (if any) entered into by the DNO Party for delivery in the current Regulatory Year (at the time of setting the price) or in the two previous Regulatory Years (subject to Paragraph 6.7); or

b. if (within the period referred to in Paragraph 6.5(a)) the DNO Party has not entered into a contract for pre-fault Distribution Flexibility Services for demand turn down/generation turn up but has issued and published tenders for Distribution Flexibility Services for those requirements, then the Flexibility Market Import Price shall be the highest maximum utilisation price from those tenders (subject to Paragraph 6.7); or

c. if neither (a) nor (b) above apply, then the Flexibility Market Import Price shall be zero.

6.6 The Flexibility Market Export Price shall be one of the following (as applicable):

a. the highest contracted price for pre-fault Distribution Flexibility Services, demand turn up/generation turn down, under contracts (if any) entered into by the DNO Party for delivery in the current Regulatory Year (at the time of setting the price) or in the two previous Regulatory Years (subject to Paragraph 6.7); or

b. if (within the period referred to in Paragraph 6.6(a)) the DNO Party has not entered into a contract for pre-fault Distribution Flexibility Services for demand turn up/generation turn down but has issued and published tenders for Distribution Flexibility Services for those requirements, then the Flexibility Market Export Price shall be the highest maximum utilisation price from those tenders (subject to Paragraph 6.7); or

c. if neither (a) nor (b) above apply, then the Flexibility Market Export Price shall be equal to the Flexibility Market Import Price.

6.7 In making any assessment under Paragraph 6.5 or 6.6, the DNO Party shall exclude any prices that are equal to or greater than the Outlier Import Threshold or Outlier Export Threshold, respectively. The Outlier Import Threshold and Outlier Export Threshold shall be the lowest of the prices contained within the Flexibility Market Import Price Data or Flexibility Market Export Price Data (respectively, and determined separately) that meets all the following criteria:

a. the price is greater than the 95th percentile when the price data is arranged in descending price order;

b. the price is more than 20% greater than the next lowest unique value in the price data; and

c. the volume (in MW) associated with the price (in aggregate with any other prices caught within the threshold) is less than 5% of the total aggregated volume (in MW) covered by all of the prices.

Flexibility Market Price Statement

6.8 By the fifth Working Day of April and October in each year, each DNO Party shall provide to the Secretariat a completed version of the table in Appendix A (the Flexibility Market Price Statement) to this Schedule showing:

a. the Flexibility Market Import Price and Flexibility Market Export Price which will apply to the 6 months from such April or October (converted to £/MVAh and uplifted in accordance with Paragraph 6.12(a)); and

b. the Flexibility Market Import Price Data and Flexibility Market Export Price Data used in calculating such prices.

6.9 The Secretariat shall, within three Workings Days of receiving each Flexibility Market Price Statement, publish the Flexibility Market Price Statement on the Website.

Cost of reinforcement

6.10 The Reinforcement Cost is identified in the Minimum Scheme at the voltage of the Point of Connection and the voltage above, less any contribution by the Customer for costs in excess of the high-cost project threshold. This is converted to a £/MVA by dividing by the requested Maximum Import Capacity or Maximum Export Capacity as applicable.

6.11 The annualised Reinforcement Cost per MVA is converted to £/MVAh using the formula:

$$\frac{\text{Reinforcement Cost (£ per MVA per year)} \times \text{Pseudo Load Coefficient}}{\text{hours in year}}$$

where the Pseudo Load Coefficient is determined in accordance with paragraph 70(c) of Schedule 16 (Common Distribution Charging Methodology), and the Pseudo Load Coefficient for the HV Site Specific tariff shall be used for this purpose.

Exceeded Curtailment Price

6.12 The Company's Exceeded Import Curtailment Price and Exceeded Export Curtailment Price for each period of 6 months starting with April or October shall be (subject to Paragraph 6.3):

a. the applicable Flexibility Market Import Price and Flexibility Market Export Price (respectively), converted to £/MVAh by dividing by an assumed 0.95 power factor, and then multiplied by 1.2; or

b. where such Flexibility Market Import Price or Flexibility Market Export Price (as applicable) is zero, then the Cost of Reinforcement determined under Paragraph 6.11 multiplied by 1.2.

7. CURTAILABLE CONNECTION END DATES

7.1 Subject to Paragraph 7.2, the Curtailment End Date will be the date on which the Customer and the Company agree to make the Curtailable Connection a Non-Curtailable Connection.

7.2 The Company may amend the Curtailment End Date to such reasonable date as the Company may specify in a written notice to the Customer; always provided that the Company gives such notice to the Customer within a reasonable period of time after the Company becomes aware of any of the circumstances necessitating such amendment (as described in Paragraph 7.3).

7.3 The circumstances described in Paragraph 7.2 are as follows:

a. severe weather conditions that either of themselves prevent the Company from carrying out the requisite work or (being of any of the categories 1, 2 or 3 of severity as defined in the Electricity (Standards of Performance) Regulations 2015), cause the Company (acting reasonably) to postpone pre-planned works in order to restore supplies to Customers as quickly as possible;

b. a network system emergency that causes the Company (acting reasonably) to redirect its resources and thereby prevents it from completing any action required to convert the Curtailable Connection to a Non-Curtailable Connection;

c. an inability to undertake live working on the Distribution System because of compliance with safety procedures in circumstances where the Company would normally expect to undertake such working and where this restriction has a material impact on the timescale for completion of the works needed to convert the Curtailable Connection to a Non-Curtailable Connection;

d. delays imposed by a requirement to obtain a notice and/or permit for street works under the Traffic Management Act 2004 or the New Roads and Street Works Act 1991;

e. delays in obtaining any necessary consents or rights, and/or in acquiring any necessary interest in land, in relation to the location of electric lines and electrical plant needed to provide the Non-Curtailable Connection;

f. that works that are stated in the accepted connection offer needed to convert the Curtailable Connection to a Non-Curtailable Connection to be prerequisite to the commencement or completion (as appropriate) of the works needed to convert the Curtailable Connection to a Non-Curtailable Connection, and that are not the responsibility of the Company, have not been completed in the agreed manner or within the time agreed; and

g. that any other matters stated in the accepted connection offer needed to convert the Curtailable Connection to a Non-Curtailable Connection to be prerequisite to the commencement or completion (as appropriate) of the works needed to convert the Curtailable Connection to a Non-Curtailable Connection, and that are not the responsibility of the Company, have not been satisfied in the manner or within the time envisaged by the accepted offer.

7.4 If the Customer does not request a Non-Curtailable Connection, or does not accept the cost of converting the Curtailable Connection to a Non-Curtailable Connection, the Connection shall continue to be a Curtailable Connection until such a time as the Customer requests a Non-Curtailable Connection and accepts the cost of converting the Curtailable Connection to a Non-Curtailable Connection.

8. CURTAILABLE CONNECTION AGREEMENT

8.1 The Company must use the form of agreement set out in Appendix B when entering into a contract for the ongoing provision of a Curtailable Connection, unless otherwise agreed with the Customer.

9. DEFINITIONS

9.1 Words beginning with a capital letter that are not otherwise defined in this Schedule have the meanings given to then in Clause 1 of the main body of this Agreement, and the rules of interpretation set out in that Clause 1 also apply.

9.2 In this Schedule, unless the context otherwise requires, the expressions below shall have the meanings set out below:

Committed Demand Capacity	is calculated in accordance with Paragraph 2.4(c).
Committed Generation Capacity	is calculated in accordance with Paragraph 2.5(c).
Company	means a DNO/IDNO Party.
Connection Point	means an Exit Point or Entry Point.
Curtail/Curtailment	means any action taken by the Company to restrict the flow of electricity at the Connection Point, except where that restriction is caused by: (a) an Interruption to the Customer's supply; and/or (b) curtailment as a result of constraints on the transmission network.
Curtailable Connection	means a connection to the Company's Distribution System which is made on the basis that it is expressly subject to Curtailment (and for which the connection application was received on or after 1 April 2023).
Curtailable Connection Agreement	means an agreement between the Company and a Customer on the terms set out in Appendix 2.
Curtailable Export Capacity	means the Maximum Export Capacity less the Non-Curtailable Export Capacity.

Curtailable Import Capacity	means the Maximum Import Capacity less the Non-Curtailable Import Capacity.
Curtailment End Date	means the date (if any) from which the Company has agreed to make the Curtailable Connection a Non-Curtailable Connection (subject to amendment in accordance with Paragraph 7.2).
Curtailment Instruction Value	means the value by which the Company instructs the Customer to limit their Maximum Import Capacity or Maximum Export Capacity. This cannot be greater than the Curtailable Import Capacity or Curtailable Export Capacity (as applicable).
Curtailment Limit	means Import Curtailment Limit and/or Export Curtailment Limit.
Customer	means an owner or occupier of premises whose premises are (or are required to be) connected to the Company's Distribution System (whether for the purposes of receiving a supply of electricity and/or exporting electricity), and includes an electricity supplier when acting on behalf of such an owner/occupier.
Demand Connection	has the meaning given to it in Schedule 22 (Common Connection Charging Methodology).
Distribution Flexibility Services	has the meaning given to that term in the Distribution Licence.
Exceeded Curtailment Price	means the Exceeded Import Curtailment Price and/or Exceeded Export Curtailment Price.
Exceeded Export Curtailment Price	means the price calculated in accordance with Paragraph 6.12. For the purposes of calculating any payments under Paragraph 3, the Company shall use the price applying at the end of the four-Quarter period to which the payment applies.
Exceeded Import Curtailment Price	means the price calculated in accordance with Paragraph 6.12. For the purposes of calculating any payments under Paragraph 3, the Company shall use the price applying at the end of the four-Quarter period to which the payment applies.
Export Curtailment Limit	means the number of full hours per annum (measured over a twelve-month period) during which the Customer could be required to reduce its Maximum Export Capacity to the Non-Curtailable Export Capacity.
Flexibility Market Export Price	means the value calculated in accordance with Paragraph 6.6.
Flexibility Market Import Price	means the value calculated in accordance with Paragraph 6.5.
Flexibility Market Export Price Data	means either: (a) the prices referred to in Paragraph 6.5(a) (if any); or (b) if there are no such prices, the prices referred to in Paragraph 6.6(b).
Flexibility Market Import Price Data	means either: (a) the prices referred to in Paragraph 6.6(a) (if any); or (b) if there are no such prices, the prices referred to in Paragraph 6.5(b).
Full Export Curtailment Hours	means the value calculated in accordance with Paragraph 3.2.
Full Import Curtailment Hours	means the value calculated in accordance with Paragraph 3.1.
Generation Connection	has the meaning given to it in Schedule 22 (Common Connection Charging Methodology).
Import Curtailment Limit	means, the number of full hours per annum (measured over a twelve-month period) during which the Customer could be required to reduce its Maximum Import Capacity to the Non-Curtailable Import Capacity.
Interruption	has the meanings given to it in Annex F of the Regulatory Instructions and Guidance under the Distribution Licences of the DNO Parties.
Minimum Scheme	has the meaning given to it in Schedule 22 (Common Connection Charging Methodology).
Network Asset Demand Capacity	has the meaning given to it in Paragraph 2.3(b).
Network Asset Generation Capacity	has the meaning given to it in Paragraph 2.3(c).
Non-Curtailable Connection	means a connection which is not a Curtailable Connection.
Non-Curtailable Connection Offer	means an offer provided by the Company to provide a Non-Curtailable Connection.
Non-Curtailable Export Capacity	means the amount of export capacity (expressed in kW or kVA) which the Customer is permitted to use that is not subject to Curtailment. This is determined as the amount of capacity which can be connected at the Point of Connection without the need for network Reinforcement.
Non-Curtailable Import Capacity	means the amount of import capacity (expressed in kW or kVA) which the Customer is permitted to use that is not subject to Curtailment. This is determined as the amount of capacity which can be connected at the Point of Connection without the need for network Reinforcement.
Non-PV Generation	means electricity generation other than PV Generation.
Outlier Import Threshold	means the value calculated in accordance with Paragraph 6.7.
Outlier Export Threshold	means the value calculated in accordance with Paragraph 6.7.

Point of Connection	has the meaning given to it in Schedule 22 (Common Connection Charging Methodology).
PV Generation	means electricity generation from solar PV which can only export onto the Distribution System during hours of daylight (i.e. it is not combined with a storage capability).
Reinforcement	has the meaning given to it in Schedule 22 (Common Connection Charging Methodology).
Reinforcement Cost	means the cost of Reinforcement as calculated in accordance with Schedule 22 (Common Connection Charging Methodology).

APPENDIX A: FLEXIBILITY MARKET PRICE STATEMENT

[DNO Party]	
Market Price Data (contracted)	
Flexibility Market Import Price (£/MWh)	
Flexibility Market Export Price (£/MWh)	
Market Price Data (tendered)	
Flexibility Market Import Price (£/MWh)	
Flexibility Market Export Price (£/MWh)	
Import Curtailment Price (demand turn down/generation turn up)	
Exceeded Import Curtailment Price (£/MVAh)	
Exceeded Export Curtailment Price (demand turn up/generation turn down)	
Exceeded Export Curtailment Price (£/MVAh)	

DISTRIBUTION FLEXIBILITY SERVICES CONTRACT DATA					
[DNO Party]					
Import Prices (£/MWh)	Capacity requirement (MW)	Regulatory Year of Delivery	Export Prices (£/MWh)	Capacity requirement (MW)	Regulatory Year of Delivery

DISTRIBUTION FLEXIBILITY SERVICES TENDER DATA					
[DNO Party]					
Import Prices (£/MWh)	Capacity requirement (MW)	Regulatory Year of Delivery	Export Prices (£/MWh)	Capacity requirement (MW)	Regulatory Year of Delivery

APPENDIX B: FORM OF CURTAILABLE CONNECTION AGREEMENT

BETWEEN:

1. [Distributor Name] [Company Number] [Registered Address] (the "**Company**") **AND**

2. [Connectee Name] [Company Number] [Registered Address] (the "**Customer**")

1 The Company agrees to the Connection of the Customer's Installation to the Company's Distribution System on the terms and conditions of this Curtailable Connection Agreement.

2 Subject to the express provisions of this Curtailable Connection Agreement, Section 3 of the National Terms of Connection (the "Applicable NTC Section") will apply (as amended from time to time) and as amended by Appendix 2 of this Agreement as if it was set out in this Curtailable Connection Agreement, and as if

references in the Applicable NTC Section to **"this agreement"** or to **"this Agreement"** were to this Curtailable Connection Agreement.

3 The National Terms of Connection are available in writing from the Energy Networks Association, 1st Floor, 4 More London Riverside, London, SE1 2AU, or from the website at www.connectionterms.co.uk.

4 Expressions used in this Curtailable Connection Agreement shall have the same meanings as is given to them in the Applicable NTC Section.

5 Details of the Premises, the Connection Points, the technical characteristics of the Connection Points and other matters are set out in Annex 1 to this Curtailable Connection Agreement.

6 The Parties may agree variations to this Curtailable Connection Agreement, which variations must be recorded in writing and signed by an authorised representative of each Party. Each Party shall negotiate in good faith the terms of any variation proposed by the other. If any variation has not been agreed within 1 month of its being proposed, either Party may refer the matter to the Authority for resolution pursuant to section 23 of the Act. The Parties shall give effect to any such determination, and shall enter into any agreement as shall be necessary to give effect to any such determination.

7 Address for notices

a. to the Company: for the attention of [name], [address], [email address]

b. to the Customer: for the attention of [name], [address], [email address]

SIGNED by (signature) .....

for and on behalf of the Company (print name) .....

(job title) .....

(date) .....

SIGNED by (signature) .....

for and on behalf of the Customer (print name) .....

(job title) .....

(date) .....

ANNEX 1 - GENERAL PARTICULARS OF THE CURTAILABLE CONNECTION

The characteristics of the connection shall be as follows:

(a)	characteristics of supply:	
	(i)	number of phases: [Number]
	(ii)	current: [Alternating current]
	(iii)	voltage: [Enter Statutory Voltage kV ± 6% / +10%/-6%]
	(iv)	frequency: [50 Hertz ± 1%]
(b)	Connection Point(s): either	

	(i)	where the connection is provided from the Company's final cut-out fuse, isolator, switch, metering switch fuse or metering circuit breaker, unless otherwise stated in this Curtailable Connection Agreement the Connection Points are the outgoing terminals of the Company's final cut-out fuse, isolator, switch, metering switch fuse or metering circuit breaker, or		
	(ii)	where the Company's electric lines connect directly to a Customer's intake isolator, switch, metering switch fuse or metering circuit breaker, unless otherwise stated in this Curtailable Connection Agreement the Connection Points are the incoming terminals of the Customer's intake isolator, switch, metering switch fuse or metering circuit breaker,		
	and, for the avoidance of doubt, the Connection Points may be remote from the Customer's Installation where third party electric lines and/or electric plant provide the intermediate electrical connection from the Company's Distribution System to the Customer's Installation.			
(c)	use of system tariff type: [state here or else "Rates published in relevant charging statement"]			
(d)	Details of Premises:			
	(i)	Address:		[SITE ADDRESS HERE]
	(ii)	MPANs:		[IMPORT MPANS HERE]
				[EXPORT MPANS HERE]
	(iii)	Commencement Date:		[COMMENCEMENT DATE DD/MM/YYYY]
(e)	Capacity Information:			
	(i)	Maximum Import Capacity:		[xxx] kVA
			With effect from	[DD/MM/YYYY]
			First date for Reduction	[DD/MM/YYYY]
	(ii)	Maximum Export Capacity:		[xxx] kVA
			With effect from	[DD/MM/YYYY]
			First date for Reduction	[DD/MM/YYYY]
(f)	Curtailment Information:			
	(i)	Non-Curtailable Import Capacity:		[xxx] kVA
	(ii)	Non-Curtailable Export Capacity:		[xxx] kVA
	(iii)	Curtailable Import Capacity:		[xxx] kVA
	(iv)	Curtailable Export Capacity:		[xxx] kVA
	(v)	Curtailment End Date:		[N/A] or DD/MM/YYYY
	(vi)	Import Curtailment Limit:		[hours]
	(vii)	Export Curtailment Limit:		[hours]
	(viii)	Exceeded Import Curtailment Price (subject to change):		[£/MVAh]
	(ix)	Exceeded Export Curtailment Price (subject to change):		[£/MVAh]

ANNEX 2 - AMENDMENTS TO THE APPLICABLE NTC SECTION

Section 3 of the National Terms of Connection (the **"Applicable NTC Section"**) shall be amended as set out below.

1. DEFINITIONS & INTERPRETATION

The following additional definitions shall be included and the following amendments to existing definition shall be made:-

"Curtail"/ "Curtailment"/ "Curtailed" means any action taken by the Company to restrict the flow of electricity at the Connection Point, except where that restriction is caused by: (a) an Interruption to the Customer's supply; and/or (b) curtailment as a result of constraints on the transmission network.

"Curtailable Export Capacity" means the Maximum Export Capacity less the Non-Curtailable Export Capacity.

"Curtailable Import Capacity" means the Maximum Import Capacity less the Non-Curtailable Import Capacity.

"Curtailment End Date" means the date (if any) from which the Company has agreed to make the connection a Non-Curtailable Connection, as set in Annex 1 or as otherwise agreed between the Parties (but always subject to Clause

12.18);

"Curtailment Instruction" has the meaning given to that expression in Clause 12.16;

"Curtailment Instruction Value" means the value by which the Company instructs the Customer to limit its Maximum Import Capacity and/or Maximum Export Capacity (which cannot be greater than the Curtailable Import Capacity or Curtailable Export Capacity, as applicable).

"Curtailment Period" means the period from the date of Energisation of the Connection Point to the Curtailment End Date (inclusive).

"Exceeded Export Curtailment Price" means: the price specified on the Company's website or as provided by the Company to the Customer, calculated in accordance with Schedule 2D of the DCUSA. For the purposes of calculating any payments under Clause 12.23, the Company shall use the price applying at the end of the four-Quarter period to which the payment applies.

"Exceeded Import Curtailment Price" means: the price specified on the Company's website or as provided by the Company to the Customer, calculated in accordance with Schedule 2D of the DCUSA. For the purposes of calculating any payments under Clause 12.22, the Company shall use the price applying at the end of the four-Quarter period to which the payment applies.

"Export Curtailment Limit" means the number of full hours per annum (measured over a twelve-month period) during which the Customer could be required to reduce its Maximum Export Capacity to the Non-Curtailable Export Capacity;

"Interruption" has the meaning given to it in Annex F of the Regulatory Instructions and Guidance as defined in the Electricity Distribution Licence.

"Full Export Curtailment Hours" means the value calculated in accordance with Clause 12.21.

"Full Import Curtailment Hours" means the value calculated in accordance with Clause 12.20.

"Import Curtailment Limit" means the number of full hours per annum (measured over a twelve-month period) during which the Customer could be required to reduce its Maximum Import Capacity to the Non-Curtailable Import Capacity.

"Non-Curtailable Connection" means that the connection is no longer subject to Curtailment.

"Non-Curtailable Export Capacity" means the amount of export capacity (expressed in kW or kVA) which the Customer is permitted to use that is not subject to Curtailment, as set out in Annex 1.

"Non-Curtailable Import Capacity" means the amount of import capacity (expressed in kW or kVA) which the Customer is permitted to use that is not subject to Curtailment, as set out in Annex 1.

"Monitoring Equipment" means any monitoring and metering equipment that may be used by the Company for the purposes of managing Curtailment, and for measuring or checking consumption otherwise than for settlement;

"Quarter" means, the period of three months commencing on 1 January, 1 April, 1 July and 1 October respectively in each year.

5. DE-ENERGISATION

The following additional clause 5.12 shall be included:-

Curtailment

5.12 The Company may De-energise a Connection Point if the Customer fails to comply with a Curtailment Instruction, but only for such time as the Company requires the Connection Point to be Curtailed or until the Customer complies with the Curtailment Instruction.

12. LIMITATION OF CAPACITY

Clause 12.2 shall be amended to read as follows:-

12.2 Subject to the other provisions of this Agreement, the Company shall use reasonable endeavours to:

12.2.1 ensure that the Maximum Import Capacity and the Maximum Export Capacity is available at the Connection Point at all times during the period of this Agreement except where the Capacity is Curtailed under provisions of Clause 12.16; and

12.2.2 maintain the connection characteristics at the Connection Point.

The following new clauses 12.15 to 12.26 shall be added:-

Curtailment

12.15 During the Connection Period, the Company may install additional equipment at the Connection Point designed to limit the import and/or export of electricity from or to the Distribution System to the Non-Curtailable Import Capacity and/or the Non-Curtailable Export Capacity (as applicable).

12.16 The Company may give the Customer a “Curtailment Instruction” at any time during the Curtailment Period. The Company shall notify the Customer when the need to Curtail has finished.

12.17 The Company shall not instruct the Customer to reduce its Maximum Import Capacity and/or the Maximum Export Capacity to less than the Non-Curtailable Import Capacity or the Non-Curtailable Export Capacity (as applicable) and the Customer is not obliged to reduce its Maximum Import Capacity and/or the Maximum Export Capacity to below these levels even if the Company instructs it to do so.

12.18 The Company may amend the Curtailment End Date to such reasonable date as the Company may specify in a written notice of such amendment to the Customer; always provided that the Company gives such notice to the Customer within a reasonable period of time after the Company becomes aware of any of the circumstances necessitating such amendment (as described in Clause 12.19).

12.19 The circumstances described in Clause 12.18 are as follows:

a. severe weather conditions that either of themselves prevent the Company from carrying out the requisite work or (being of any of the categories 1, 2 or 3 of severity as defined in the Electricity (Standards of Performance) Regulations 2015), cause the Company (acting reasonably) to postpone pre-planned works in order to restore supplies to customers as quickly as possible;

b. a network system emergency that causes the Company (acting reasonably) to redirect its resources and thereby prevents it from completing any action required to convert the Curtailable connection to a Non-Curtailable Connection;

c. an inability to undertake live working on the Distribution System because of compliance with safety procedures in circumstances where the Company would normally expect to undertake such working and where this restriction has a material impact on the timescale for completion of the works needed to convert the Curtailable connection to a Non-Curtailable Connection;

d. delays imposed by a requirement to obtain a notice and/or permit for street works under the Traffic Management Act 2004 or the New Roads and Street Works Act 1991;

e. delays in obtaining any necessary consents or rights, and/or in acquiring any necessary interest in land, in relation to the location of electric lines and electrical plant needed to provide the Non-Curtailable Connection;

f. that works that are stated in the accepted connection offer needed to convert the Curtailable connection to a Non-Curtailable Connection to be prerequisite to the commencement or completion (as appropriate) of the works needed to convert the Curtailable connection to a Non-Curtailable Connection, and that are not the responsibility of the Company, have not been completed in the agreed manner or within the time agreed; and

g. that any other matters stated in the accepted connection offer needed to convert the Curtailable connection to a Non-Curtailable Connection to be prerequisite to the commencement or completion (as appropriate) of the works needed to convert the Curtailable connection to a Non-Curtailable Connection, and that are not the responsibility of the Company, have not been satisfied in the manner or within the time envisaged by the accepted offer.

12.20 The Full Import Curtailment Hours shall be calculated as follows at the end of each Quarter for that Quarter and the previous three Quarters (i.e., a rolling four Quarters):

$$= \sum_{i=1}^{n} \times \mathrm{di_i} \times \mathrm{civ_i} \div \mathrm{cic}$$

Where,

di	=	the duration of each period of Curtailment (in hours, partial or full) determined from the time at which the Company instructs the Customer to Curtail its Maximum Import Capacity to the time at which the Company notifies the Customer that there is no longer a requirement to Curtail;
n	=	the number of Curtailment instructions in those four Quarters;
civ	=	the Curtailment Instruction Value for each Curtailment instruction; and
cic	=	the Curtailable Import Capacity.

12.21 The Full Export Curtailment Hours shall be calculated as follows at the end of each Quarter for that Quarter and the previous three Quarters (i.e., a rolling four Quarters):

$$= \sum_{i=1}^{n} \times \mathrm{de_i} \times \mathrm{civ_i} \div \mathrm{cec}$$

Where,

de	=	the duration of each period of Curtailment (in hours, partial or in full) determined from the time at which the Company instructs the Customer to Curtail its Maximum Export Capacity to the time at which the Company notifies the Customer that there is no longer a requirement to Curtail;
n	=	the number of Curtailment instructions in those four Quarters;
civ	=	the Curtailment Instruction Value for each Curtailment instruction; and
cec	=	the Curtailable Export Capacity.

12.22 At the end of every fourth Quarter (ending after energisation of the connection), if the Full Import Curtailment Hours exceeds the Import Curtailment Limit, then the Company shall make a payment to the Customer

(within 30 days following the end of such fourth Quarter), with the payment calculated as follows:

$$= (fich - icl) \times cic \times eicp$$

Where,

fich	=	the Full Import Curtailment Hours;
icl	=	the Import Curtailment Limit;
cic	=	Curtailable Import Capacity (MVA); and
eicp	=	the Exceeded Import Curtailment Price at the end of such fourth Quarter.

12.23 At the end of every fourth Quarter (ending after energisation of the connection), if the Full Export Curtailment Hours exceeds the Export Curtailment Limit, the Company shall make a payment to the Customer (within 30 days following the end of such fourth Quarter), with the payment amount calculated as follows:

$$= (fech - ecl) \times cec \times eecp$$

Where,

fech	=	the Full Export Curtailment Hours;
ecl	=	the Export Curtailment Limit;
cec	=	Curtailable Export Capacity (MVA); and
eecp	=	the Exceeded Export Curtailment Price at the end of such fourth Quarter.

12.24 Where a Customer has been subject to Curtailment within a Quarter, the Company shall notify the Customer of the number of Full Import Curtailment Hours and/or Full Export Curtailment Hours that the Customer has been instructed to make.

12.25 Each such notification shall be made within 30 days after the end of the Quarter, and shall include:

a. each period of Curtailment during the Quarter (with start and end dates and times); and

b. the applicable Exceeded Curtailment Price.

12.26 Any and liability of the Company for exceeding the Import Curtailment Limit and/or the Export Curtailment Limit shall be limited to the payments calculated in accordance with Clauses 12.22 and 12.23.

ANNEX 3 - TECHNICAL CONDITIONS

Part 1 - Connection Points

Part 2 - Technical Supply Capacities and Sole Use Assets

Part 3 - Site Responsibility Schedules

Part 4 - Site Specific Operating Arrangements

Part 5 - Site Specific Technical Conditions

Part 6 - Geographic Plans

Part 7 - Operational Diagrams

Part 8 - Generating Equipment

Part 9 - Technical Derogations

Part 10 - Property Documents

Part 11 - Technical Arrangements for Curtailment

SCHEDULE 3: INTEREST RECONCILIATION ACCOUNTS

Interest in respect of Reconciliation Accounts, as provided for in Clause 20.4, shall be calculated in accordance with the following provisions:

1 For the first day after the Invoice Date of the Initial Account, the following calculation shall be used by the Company in preparing a Reconciliation Account:

$$\mathbf{T1 = (Vr - Vr - 1) \times (I1 \times 1/365) + (Vr - Vr - 1)}$$

2 For all subsequent days until the Invoice Date of the Reconciliation Account, the following calculation shall be used by the Company in preparing a Reconciliation Account:

$$\mathbf{Tn + 1 = Tn \times (In \times 1/365) + Tn}$$

where:

Tn = amount due under a Reconciliation Account, including interest calculated on a daily compound basis

r = run number. For an Initial Settlement Run r = 0, and for a Final Settlement Run, r = 4

In = the Barclays Bank plc daily declared base interest rate for the Working Day prior to day n

Vr = amount due from run calculation r, excluding interest due, and

n = day number count

3 For the purpose of calculating the daily interest rates in the above calculations, the number of days in a leap year shall be deemed to be 365.

4 For the avoidance of doubt, the Invoice Date of the Initial Account shall be when n = 0.

SCHEDULE 4: BILLING AND PAYMENT DISPUTES

1. BILLING AND PAYMENT DISPUTES UNDER SECTION 2A

1.1 Subject to Clause 19.11, this Paragraph 1 of Schedule 4 applies to disputes in relation to Charges payable by or to the User pursuant to any of the provisions of Section 2A.

1.2 Where the User disputes an account issued under any of Clauses 20, 21 or 22 and the dispute is a Designated Dispute (as defined in Paragraph 1.3):

a. the Payor shall pay such amount of the Charges due as are not in dispute and shall be entitled to withhold the balance pending resolution of the dispute;

b. the User and Company shall use reasonable endeavours to resolve the dispute in good faith;

c. where the dispute remains unresolved after 20 Working Days, either of the User or the Company may refer the dispute to arbitration in accordance with Clause 58; and

d. following resolution of the dispute, any amount agreed or determined to be payable shall be paid within 20 Working Days after such agreement or determination, and interest shall accrue on such amount plus Value Added Tax (if any) from the date on which such amount was originally due until the date of payment at the rate of 1% per annum above the base rate during such period of Barclays Bank plc, compounded annually.

1.3 A dispute shall be a **Designated Dispute** for the purposes of this Paragraph 1 where within 14 days of receiving the relevant account, the User in good faith (i) notifies the Company that one or more of the circumstances mentioned in Paragraph 1.3 (a) and (b) applies to the request, and (ii) provides the Company with a statement and explanation of the amount in dispute. Those circumstances are:

a. that, in the calculation by the Company of the Charges in question, there is a **manifest error**, being either (i) an error in the information used for, or (ii) an arithmetical error in, that calculation which is apparent on the face of the relevant account, or (iii) an error which, not being apparent thereon, the User nevertheless in good faith believes will be shown to be present in the calculation upon investigation; and/or

b. that, for a Metering Point or Metering System within Clause 19.5.1, the Company has chosen not to use the half-hourly data (whether actual or estimated) provided by the Data Collector or (for MHHS) the Data Service for the purposes of Settlement in calculating Use of System Charges, and the User disputes the accuracy or validity of the data actually used.

1.4 Disputes about the matters listed at Paragraph 1.4 (a) and (b) are not Designated Disputes and Paragraph 1.2 shall not apply (except in the case of a manifest error) where:

a. the Company has invoiced Use of System Charges in accordance with Clause 19.5; or

b. the Company has used estimated data in accordance with Clause 21.2.1.

1.5 Where, other than in the case of a Designated Dispute, within 14 days of receiving the relevant account, the User in good faith provides the Company with a statement and explanation of the amount of the Charges in dispute:

a. the Payor shall pay the total amount of such Charges as they fall due in accordance with Clause 19.6;

b. the Company and the User shall use reasonable endeavours to resolve the dispute in good faith;

c. where the dispute remains unresolved after 20 Working Days, either the Company or the User may refer the dispute to arbitration in accordance with Clause 58; and

d. following resolution of the dispute, any amount agreed or determined to be payable or repayable (including where appropriate any interest paid pursuant to Clause 23.3) by the Company shall be paid within 20 Working Days after such agreement or determination, and interest shall accrue on such amount from the date on which such amount was originally paid by the User until the date of repayment at 1% per annum above the base rate during such period of Barclays Bank plc, compounded annually.

2. BILLING AND PAYMENT DISPUTES UNDER SECTION 2B

2.1 This Paragraph 2 of Schedule 4 applies to disputes in relation to charges payable by the User pursuant to any of the provisions of Section 2B.

2.2 Where the User disputes an account issued under either of Clause 44 or 45 and the dispute is a Designated Dispute (as defined in Paragraph 2.3):

a. the User shall pay such amount of the charges due as are not in dispute and shall be entitled to withhold the balance pending resolution of the dispute;

b. the User and Company shall use reasonable endeavours to resolve the dispute in good faith;

c. where the dispute remains unresolved after 20 Working Days, either of the User or the Company may, on notice to the other:

i. refer the dispute to arbitration in accordance with Clause 58; or

ii. elect not to rely on arbitration, in which case arbitration will not apply and either of them may refer the dispute to the Authority for its determination, which shall be final and binding; and

d. following resolution of the dispute, any amount agreed or determined to be payable shall be paid within 20 Working Days after such agreement or determination, and interest shall accrue on such amount plus Value Added Tax (if any) from the date on which such amount was originally due until the date of payment at the rate of 1% per annum above the base rate during such period of Barclays Bank plc, compounded annually.

2.3 A dispute shall be a **Designated Dispute** for the purposes of this Paragraph 2 where within 14 days of receiving a request for payment the User in good faith (i) notifies the Company that one or more of the circumstances mentioned in Paragraph 2.3 (a) and (b) applies to the request, and (ii) provides the Company with a statement and explanation of the amount in dispute. Those circumstances are:

a. that, in the calculation by the Company of the charges in question, there is a **manifest error**, being either (i) an error in the information used for, or (ii) an arithmetical error in, that calculation which is apparent on the face of the relevant account, or (iii) an error which, not being apparent thereon, the User nevertheless in good faith believes will be shown to be present in the calculation upon investigation; and/or

b. that the Company has chosen not to use the data (whether actual or estimated) provided in accordance with Clause 43.6 in calculating Use of System Charges, and the User disputes the accuracy or validity of the data actually used.

2.4 Disputes about the matters listed at Paragraph 2.4 (a) and (b) are not Designated Disputes and Paragraph 2.2 shall not apply (except in the case of a manifest error) where:

a. the Company has invoiced Use of System Charges in accordance with Clause 43.6; or

b. the Company has used estimated data in accordance with Clause 44.3.

2.5 Where, other than in the case of a Designated Dispute, within 14 days of receiving a request for payment the User in good faith provides the Company with a statement and explanation of the amount of the charges in dispute:

a. the User shall pay the total amount of such charges as they fall due in accordance with Clause 43.7;

b. the Company and the User shall use reasonable endeavours to resolve the dispute in good faith;

c. where the dispute remains unresolved after 20 Working Days, either the Company or the User may, on notice to the other:

i. refer the dispute to arbitration in accordance with Clause 58; or

ii. elect not to rely on arbitration, in which case arbitration shall not apply and either of them may refer the dispute to the Authority for its determination, which shall be final and binding; and

d. following resolution of the dispute, any amount agreed or determined to be repayable (including where appropriate any interest paid pursuant to Clause 46.3) by the Company shall be paid within 20 Working Days after such agreement or determination, and interest shall accrue on such amount from the date on which such amount was originally paid by the User until the date of repayment at 1% per annum above the base rate during such period of Barclays Bank plc, compounded annually.

SCHEDULE 5: APPROVAL AND PERMISSION PROCEDURES

1. DEFINITIONS

In this Schedule 5, except where the context otherwise requires, the following terms shall have the meanings set opposite them:

Application	means a person who applies for approval pursuant to Paragraph 3.
Approved Contractor	means a contractor approved pursuant to Paragraph 3.
Competent Person	means a person appointed by an Approved Contractor in accordance with Paragraph 4.1.
Certificate of Competence	means a certificate issued by an Approved Contractor in accordance with Paragraph 4.1.
Permission	means a permission issued in writing by the Company pursuant to Paragraph 5.
Quality Assurance Certification Body	means a body assessed, validated and regulated by the UK Accreditation Service.
Works	means Energisation Works, Re-energisation Works or De-energisation Works.

2. PRINCIPLES

2.1 Subject to the provisions of Clause 25 or Clause 41 (as applicable) and this Schedule 5, the User shall be entitled to procure the performance of Works on the Company's Distribution System by a person who is not an employee of the Company. This Schedule 5 does not apply to work carried out by a Meter Operator Agent pursuant to the relevant Meter Operation Services Agreement.

2.2 A Competent Person shall be recognised to be a suitable person to carry out Works on the Company's Distribution System in accordance with and to the extent specified in a Permission.

2.3 Where the User elects to have Works performed on the Company's Distribution System by an Approved Contractor rather than the Company, the Approved Contractor shall undertake to perform all the categories of Works in accordance with and to the extent specified in the Permissions held by its Competent Persons, and the Company shall only be obliged to undertake such categories of Works as are not so specified. The User shall remunerate the Company for undertaking any such Works by reference to the relevant charges set out in the Relevant Charging Statement, or by agreement where the charges for such Works are not set out therein.

3. PROCEDURE FOR APPROVING CONTRACTORS

3.1 Where an Applicant has applied for approval as an Approved Contractor for the purposes of this Schedule 5, the Company shall appoint a Quality Assurance Certification Body to carry out an assessment of the Applicant's qualifications for approved status. The Applicant shall be advised of any assessment fees payable to the Company. The Quality Assurance Certification Body shall advise the Company and the Applicant of the results of the assessment, and the Company shall decide whether the Applicant may be approved together with the reasons for that decision.

3.2 An approval pursuant to Paragraph 3.1:

a. shall be valid for three years, during which period the Company may at any time carry out inspections of the Approved Contractor's work on site; and

b. may be withdrawn at any time by the Company, subject always to the Approved Contractor being given a reasoned explanation.

3.3 The Company may accept an approval of an Applicant given by another supplier in accordance with the procedure stated in this Paragraph 3.

4. PROCEDURE FOR RECOGNISING COMPETENT PERSONS

4.1 A person shall be recognised by the Company as being a suitable person to perform Works on the Company's Distribution System if that person is employed by an Approved Contractor and has been appointed in writing by the Approved Contractor as a Competent Person, being someone who has successfully completed satisfactory training and examination in electrical safety awareness and appropriate technical knowledge, and who personally holds a Certificate of Competence issued by the Approved Contractor as evidence of a suitable qualification in all such respects.

4.2 A Certificate of Competence issued to an Approved Contractor's employee in accordance with this Paragraph 4 shall certify that employee's suitability to perform Works on the Company's Distribution System subject to a Permission. The Approved Contractor shall be responsible for giving the Company a copy of each Certificate of Competence issued by it, for reissuing or revoking each Certificate of Competence every three years, and for maintaining a record of all Certificates of Competence currently in force.

4.3 A Competent Person must have a valid Certificate of Competence available for inspection at all times when performing any Works on the Company's Distribution System.

5. PROCEDURE FOR RECOGNISING COMPETENT PERSONS

5.1 The User shall be entitled to procure the performance of Works on the Company's Distribution System by a Competent Person, provided that the Competent Person has a valid Permission. The grant of a Permission to a Competent Person shall not be unreasonably withheld, provided that the Company shall always have a prior right to undertake a trade test and safety awareness assessment of that person and that the reasonable costs of exercising this right shall be paid by the Approved Contractor if requested by the Company.

5.2 The nature, scope, and extent of the Works which a Competent Person may undertake shall be at the Company's sole discretion. A Permission shall specify in writing the categories of Works which the Competent Person is allowed to undertake on the Company's Distribution System, and the Competent Person's authority to undertake Works shall be limited to those categories alone and shall in no circumstances whatsoever extend to any other category of Works howsoever described.

5.3 Notwithstanding anything in Paragraph 5.2, the categories of Works specified in a Permission may (for example only and without limitation) include any of the following:

a. the withdrawal or replacement of fuse links in the service terminations;

b. the connection or severing of wiring between service terminations, meters and distribution boards;

c. attendance at or the performance of work in a Distribution System substation without the need for personal supervision;

d. the supervision or control of a working party which undertakes any of the above; and

e. the operating of high or low voltage switchgear.

6. DISPUTES

6.1 The Company and the User shall attempt to resolve in good faith any dispute in relation to assessment fees payable to the Company pursuant to Paragraph 3.1. Where a dispute remains unresolved after 10 Working

Days, either of the Company or the User may refer the dispute to the Authority for determination. Any determination by the Authority under this Paragraph 6 shall be final and binding.

SCHEDULE 6: METERING ACCURACY

1. METERING ACCURACY

1.1 Metering equipment installed and maintained pursuant to Clause 29.1, 42.2 or 42.5 shall be capable of operating within the accuracy limits specified pursuant to the Balancing and Settlement Code, or where no accuracy limits are specified in relation to an element of any metering equipment under the Balancing and Settlement Code, the accuracy of that element shall be no less than that specified in Tables 1 to 4 (inclusive) of Code of Practice Four approved pursuant to the Balancing and Settlement Code (in either case, the agreed accuracy limits).

2. DISPUTES IN RELATION TO METERING ACCURACY

2.1 Unless the accuracy of metering equipment installed and maintained pursuant to Clause 29.1, 42.2 or 42.5 is disputed by notice in writing (a dispute notice) given by one party to the other, such metering equipment shall be deemed to be accurate.

2.2 If a dispute notice is given under Paragraph 2.1 in respect of metering equipment installed pursuant to Clause 29.1, then, unless otherwise agreed, the metering equipment shall as soon as practicable be examined and tested by a meter examiner in accordance with Schedule 7 to the Act.

2.3 If a dispute notice is given under Paragraph 2.1 in respect of metering equipment installed pursuant to Clause 42.2 or 42.5, then, unless otherwise agreed, the metering equipment shall as soon as practicable be examined and tested by an independent third party agreed to by the Company and the User. Where the Company and the User cannot agree on the identity of such independent third party, such independent third party may be appointed by the Authority on the application of either the Company or the User.

2.4 If on such test under Paragraph 2.2 or 2.3:

a. it is found that the inaccuracy of the registration of the metering equipment at normal loads exceeds the agreed accuracy limits, suitable adjustment shall be made in the accounts rendered by the Company and the metering equipment or part thereof found to be inaccurate shall be recalibrated or replaced and the cost of such test and recalibration or replacement shall be paid by the party responsible for installing and maintaining the metering equipment; or

b. the metering equipment is found to be accurate within the said limits, the metering equipment shall be deemed to be accurate and the cost of moving, testing and replacing the metering equipment or any part thereof shall be paid by the party who gave the relevant dispute notice.

SCHEDULE 7: DCUSA STANDING ISSUES GROUP

1. SCOPE

1.1 The DCUSA Standing Issues Group provides an opportunity for the Panel or any person identified in Clause 10.2 to raise (and have discussed) issues relating to the operation of this Agreement. Where appropriate, the DCUSA Standing Issues Group will undertake a pre-assessment of proposed solutions prior to a formal Change Proposal being raised.

1.2 The DCUSA Standing Issues Group will act under the auspices of the Panel but will have no powers to enforce changes to this Agreement or any existing industry agreements or associated systems.

2. OBJECTIVES

2.1 The objectives of the DCUSA Standing Issues Group shall be to:

a. review issues relating to the operation of this Agreement that are submitted to it in by the Panel or by way of DCUSA Issue Forms;

b. discard issues as requiring no further action or to develop and propose cost / risk based solutions to issues;

c. identify the impact of such solutions on this Agreement;

d. consider such solutions in the light of the DCUSA Objectives;

e. provide the Panel with an early view as to the potential impact of Change Proposals that may be proposed from time to time;

f. review, on behalf of the Panel, industry developments and their possible impact on this Agreement;

g. consult outside the DCUSA Standing Issues Group where appropriate; and

h. carry out any other activity requested by the Panel.

3. MEMBERSHIP

3.1 The membership of the DCUSA Standing Issues Group shall be composed in accordance with Clauses 7.28 to 7.31.

4. CHAIR

4.1 The WG Chair for the DCUSA Standing Issues Group (the Chair) will at all times be an independent appointment and will be appointed by the Panel for a 12-month term.

4.2 Should the Chair resign, for whatever reason, before the expiry of that 12-month term, the Panel will appoint a new Chair.

4.3 The Chair's role will be to chair meetings, facilitate discussions and establish a proposed way forward.

5. REQUIREMENTS OF MEMBERS

5.1 Members of the DCUSA Standing Issues Group shall be required to act in accordance with Clause 7.33.

5.2 Those Parties entitled to attend the DCUSA Standing Issues Group, and who chose to appoint a representative, shall, where reasonably possible, be expected to ensure their attendance on a consistent basis and ensure their commitment toward making the DCUSA Standing Issues Group a success.

5.3 Representatives should be prepared to:

a. provide the confirmation referred to in Clause 7.24;

b. engage and participate fully in the DCUSA Standing Issues Group;

c. take actions to be completed outside of the DCUSA Standing Issues Group meetings; and

d. report back on views and actions taken.

6. MEETING FREQUENCY

6.1 The DCUSA Standing Issues Group will schedule meetings on a monthly basis. The convening of any meetings of the group will be on an as required basis depending on the number of issues on the table and the urgency for the resolution of them.

6.2 The Chair may convene an emergency meeting of the DCUSA Standing Issues Group where necessary, for the purpose of debating urgent operational difficulties and, where appropriate, developing Change Proposals to overcome these.

6.3 The Chair will be required to give a minimum of 5 days notice of any such emergency meeting. Where practical, and expedient, emergency meetings of the DCUSA Standing Issues Group may be conducted wholly, or partly, by conference call.

6.4 The Chair will be entitled to cancel any scheduled meeting of the DCUSA Standing Issues Group if, having consideration to the views of the group, the Chair considers there are insufficient items of importance for debate at the meeting to warrant holding it.

7. SECRETARIAT

7.1 The DCUSA Standing Issues Group will be supported by the Secretariat, who shall be responsible for:

a. booking, convening and circulating notice of meetings;

b. logging DCUSA Issue Forms and validating them for completeness;

c. circulating the agenda for each meeting of the DCUSA Standing Issues Group at least 5 Working Days in advance of the meeting (or as far in advance as reasonably practicable in the case of emergency meetings);

d. writing minutes of the meeting in a style and level of detail specified by the Chair;

e. circulating minutes of the meeting no later than 10 Working Days following the meeting;

f. publishing all meeting papers and minutes on the Website; and

g. providing a report to the Panel from each meeting as appropriate, giving a summary of key issues and progress being made, and including the task list or work plan for the DCUSA Standing Issues Group.

8. SUMMARY OF PROCESS

8.1 The DCUSA Standing Issues Group will consider issues as:

a. directed by the Panel; or

b. raised by any person entitled to raise Change Proposals in accordance with Clause 10.2, which issues must be submitted by way of a completed DCUSA Issues Form.

8.2 Where a DCUSA Issues Form has been submitted to the Secretariat, the Secretariat shall add the matter to the next scheduled DCUSA Standing Issues Group meeting. Issue forms submitted less than 5 Working Days before the next scheduled meeting will be accepted at the discretion of the Chair.

8.3 The DCUSA Standing Issues Group shall consider and recommend to the Panel or raising Party (as appropriate) solutions to issues within the DCUSA Standing Issues Group's scope.

8.4 The DCUSA Standing Issues Group will actively seek to cluster issues for consideration together where a single solution may be viable.

8.5 The DCUSA Standing Issues Group may recommend that changes be proposed to this Agreement for the resolution of these issues.

8.6 Where the DCUSA Standing Issues Group has discussed an issue and considers that a Change Proposal is needed, the Secretariat can be asked to raise a Change Proposal using the process set out in Clause 10.2A.

9. DECISION MAKING

9.1 Recommended solutions to issues may be agreed at the meeting. The recommendations may include, but are not limited to, changes to this Agreement and best practice guidance to Parties.

9.2 Recommendations are to be agreed by majority consensus of those attending the relevant DCUSA Standing Issues Group meeting.

10. REPORTING

10.1 The DCUSA Standing Issues Group reports directly to the Panel. A report will be provided to the Panel from each meeting, as appropriate, giving a summary of key issues and progress being made and including the task list or work plan for the group.

11. FUNDING

11.1 The Panel will be responsible for the costs of Secretariat services and ancillary charges such as teleconferencing charges.

11.2 The expenses of those serving on the DCUSA Standing Issues Group will be managed in accordance with Clause 8.

12. OTHER MATTERS

12.1 Save as set out in this Schedule, the procedures of the DCUSA Standing Issues Group shall be in

accordance with any direction by the Panel from time to time.

SCHEDULE 8: DEMAND CONTROL

1. INTRODUCTION

1.1 The capacity and other technical parameters of the constituent elements which make up the Distribution System can create operational constraints on Demand and the coincidence of Demand.

2. DEFINITIONS

2.1 Words beginning with a capital letter that are not otherwise defined in this Schedule 8 have the meanings given to them in Clause 1 of the main body of this Agreement, and the rules of interpretation set out in Clauses 1 and 15 also apply.

2.2 In this Schedule 8, except where the context otherwise requires, the following expressions shall have the meanings set opposite them:

Auxiliary Load Control Switch	means a switch which is an integral part of a Smart Metering System and which can switch electrical loads in the premises of a Customer.
Capacity Headroom	means the minimum margin below the maximum capacity of the Distribution System which the Company reasonably believes is necessary and justifiable to maintain Security of Supply and other technical parameters.
Compliance Notice	means a notice issued to a Supplier pursuant to Paragraph 7.6 or 8.6.
Demand	has the meaning given to that term in the Distribution Code.
Effective Date	means the date on which a notice issued pursuant to this Schedule 8 is deemed to be received in accordance with Clause 59 and/or Paragraph 11.3 (as appropriate).
Emergency Security Restriction Notice or Emergency SRN	means a notice issued pursuant to Paragraph 8.1.
Firm SRN	means a notice issued pursuant to Paragraph 7.1.
Line Loss Factor Class or LLFC	has the meaning giving to that term in the BSC.
Load Managed Area	means an area designated pursuant to Paragraph 5.1.
Load Managed Area Notice	means a notice issued pursuant to Paragraph 5.1.
Provisional SRN	means a notice issued pursuant to Paragraph 6.
Load Switching Device	means equipment relating to a Metering Point which has the functional capability to switch electrical load at that Metering Point, including radio teleswitches and/or Smart Metering Systems.
Load Switching Regime	means the allocation by a User of time switching patterns and other material load switching characteristics of a Load Switching Device as part of a programme intended to influence consumption behaviour. For the avoidance of doubt, such characteristics shall include (but shall not be limited to) features which assist in the minimisation of coincident load switching, such as Randomised Offset and/or staggered switching, and load limiting features which allow remote interruption or reduction of Demand where such functionality is available.
Randomised Offset	means, in relation to a Smart Metering System, the product of the Randomised Offset Limit and the Randomised Offset Number rounded to the nearest second. This value is used to delay the tariff switching table times and the Auxiliary Load Control Switch switching times.
Randomised Offset Limit	means, in relation to a Smart Metering System, a value in seconds in the range of 0 to 1799.
Randomised Offset Number	means, in relation to a Smart Metering System, a randomly generated value between 0 and 1.
Security of Supply	means the ability of the Company to provide supplies to Customers that comply with the Regulations and with Engineering Recommendation P2/6 (or such other planning standard as may be in force for the Company under Condition 24 of the Distribution Licence) as amended or re-enacted from time to time.
Security Restriction Notice or SRN	means a notice issued pursuant to Paragraph 6.
SSC	means Standard Settlement Configuration.
Supplier	means a person authorised to supply electricity pursuant to Section 6(1)(d) of the Act.
Total System	has the meaning given to that term in the Distribution Code.

3. GENERAL OBLIGATIONS

3.1 The User shall use reasonable endeavours to ensure that it

a. does not make any changes to Load Switching Regimes in force at particular Metering Points which have or may have a materially adverse effect on the discharge of the Company's statutory and/or regulatory obligations to develop and maintain an efficient, secure, safe, co-ordinated and economical system for the distribution of electricity by increasing the coincidence of Demand on the Distribution System in a way which is likely to infringe the Capacity Headroom so that it is insufficient to allow for normal variations in Demand.

b. shall only install Load Switching Devices which comply with all relevant technical standards in force at the date of installation and are technically suitable and properly configured for operation in conjunction with the Company's Distribution System;

c. shall only install Load Switching Devices which operate with staggered switching arrangements such that coincident switching with other similar equipment under the control of the User is limited to the extent reasonably possible; and

d. shall comply with any restrictions on Load Switching Regimes reasonably required by the Company and notified to the User in accordance with the terms of this Schedule 8.

3.2 The Company shall use reasonable endeavours (i) to issue notices in the following order: advisory notice (as referred to in Paragraph 4), Load Managed Area Notice, SRN, and Emergency SRN, and (ii) normally not to issue a notice for a relevant geographic area within 60 Working Days of the Effective Date of the last notice for that area.

3.3 The User may at any time seek advice concerning operational constraints on the Distribution System from the Company on such reasonable terms as the parties may agree in writing.

3A. OBLIGATIONS SPECIFIC TO SMART METERING SYSTEMS

3A.1 The User shall use reasonable endeavours to ensure that, where appropriate functionality is available, Smart Metering Systems installed by it (or any agent acting on its behalf) are configured:

a. to provide Randomised Offset; and

b. such that the Randomised Offset Limit is set at a value of no less than 600 and no greater than 1799.

4. ADVISORY NOTICES

4.1 The Company may at any time issue an advisory notice to the User and other Suppliers concerning potential operational constraints on the Company's Distribution System, with the intent of avoiding the requirement to designate areas of the Distribution System as Load Managed Areas.

5. LOAD MANAGED AREAS

5.1 The Company may from time to time designate areas of the Distribution System as Load Managed Areas where the Company has identified a need to reinforce or extend the capacity of such areas and, prior to issuing a Load Managed Area Notice, has either:

a. avoided or deferred the need for such reinforcement or extension through limiting the coincidence of Demand by adopting Customer Demand management to control the Load Switching Regimes; or

b. reasonably believes that such reinforcement or extension would be avoided or deferred through limiting the coincidence of Demand by Suppliers adopting Customer Demand management to control Load Switching Regimes.

5.2 A Load Managed Area Notice shall be sent to the User, all other Suppliers and the Authority.

5.3 A Load Managed Area Notice shall be effective when received or deemed to be received in accordance with Clause 59 and shall indicate:

a. the geographical area to which it applies by providing the LLFC and/or DUoS Tariff ID and associated Load Switching Regimes for each postcode (or such other method as the Company and the Supplier agree, acting reasonably);

b. the time or times of day during which in the Company's opinion:

i. changes to Load Switching Regimes in force at particular Metering Points introduced by Suppliers have increased the coincidence of Demand to such an extent that Security of Supply may be threatened; and

ii. new applications of Load Switching Regimes to particular Metering Points introduced by Suppliers may reasonably be expected to increase the coincidence of Demand to such an extent that Security of Supply may be threatened;

c. the former radio teleswitch (RTS) group code (where relevant);

d. the existing SSC and replicating SSC for peak and off-peak, including the replicating SSC description aligned to Market Domain Data (where relevant);

e. the replicating time pattern regime (TPR) and time periods for peak and off-peak (where relevant);

f. the existing SSC and replicating SSC for combined switched loads, including the replicating SSC description aligned to Market Domain Data (where relevant);

g. the combined replicating TPR and time periods for switched loads (where relevant);

h. notes column to provide relevant additional information or descriptions of the Load Switching Regimes;

i. the date from which the notice is effective; and

j. that it shall continue in force until withdrawn in writing by the Company by serving a notice on all Suppliers and the Authority.

5.4 The Company and the User acknowledge and agree that the issue of a Load Managed Area Notice constitutes notice that:

a. significant modifications of Customer Demand in the area identified in such notice may threaten Security of Supply;

b. SRNs and Emergency SRNs may be issued in respect of that area;

c. any future changes to Load Switching Regimes and/or the Randomised Offset Limit in force at particular Metering Points in that area may be subject at the request of the Company to change in accordance with Paragraph 7.6 or 8.6; and

d. any changes to Load Switching Regimes and/or the Randomised Offset Limit referred to in Paragraph 5.4 (c) will, if requested by the Company pursuant to Paragraph 7.6 or 8.6 or if made voluntarily by a User, be at the relevant User's cost.

e. where the User is replacing a Load Switching Device at a particular Metering Point, in the area identified in such a notice, the User shall use reasonable endeavours to ensure that the Load Switching Regime, and any other material characteristics of the existing Load Switching Device, are replicated on the new Load Switching Device (including the use of the Load Switching Regimes associated with a LLFC and/or DUoS Tariff ID at a particular Metering Point where these have been issued by the Company in accordance with Paragraph 5.3 (a)); and

f. where the User is unable to comply with Paragraph 5.4 (e) the User will consult with the Company and agree to alternative arrangements for that particular Metering Point.

5.5 The Load Managed Area Notice referred to in Paragraph 5.3 shall be provided in Excel spreadsheet format using the template in Appendix A to this Schedule 8. The Secretariat shall make this template available on the Website, together with additional guidance notes.

6. NOT USED

7. SECURITY RESTRICTION NOTICES

7.1 The Company may from time to time issue a Security Restriction Notice where in the Company's opinion;

a. the changes to existing Load Switching Regimes in force at particular Metering Points; and/or

b. new applications of Load Switching Regimes applied to particular Metering Points,
since the Effective Date of a Load Managed Area Notice have increased the coincidence of Demand in the whole or part of the area identified in that notice and as a result there is a material risk to Security of Supply. For the avoidance of doubt, the obligations relating to any Load Managed Area Notice in accordance with Paragraph 5 continue to apply.

7.2 A Security Restriction Notice shall be sent to the User, all other Suppliers and the Authority.

7.3 A Security Restriction Notice shall be effective when received or deemed received in accordance with Clause 59 and shall indicate:

a. the geographical area to which it applies by providing LLFC and/or DUoS Tariff ID and associated Load Switching Regimes for each and postcode (or such other method agreed as per Paragraph 5.3 (a));

b. the time or times of day during which Capacity Headroom is infringed and into which Demand cannot be moved or added as a result of changes to Load Switching Regimes;

c. the time or times of day during which there is sufficient capacity at the Effective Date of the Security Restriction Notice into which Demand can be moved;

d. the date from which the notice is effective; and

e. that it shall continue in force until withdrawn in writing by the Company by serving a notice on all Suppliers and the Authority.

7.4 The Company and the User acknowledge and agree that the issue of a Security Restriction Notice constitutes notice that:

a. any modifications of Customer Demand induced by changes to Load Switching Regimes in the area identified in such notice may threaten Security of Supply;

b. Emergency SRNs may be issued in respect of that area and that such notices will normally not be issued within 20 Working Days of the Effective Date of the relevant Security Restriction Notice;

c. any future changes to Load Switching Regimes and/or the Randomised Offset Limit in force at particular Metering Points in that area may be subject at the request of the Company to change in accordance with Paragraph 7.6 or 8.6; and

d. any changes to switching times in order to effect changes to Load Switching Regimes and/or the Randomised Offset Limit referred to in Paragraph 7.4(c) will, if requested by the Company pursuant to Paragraph 7.6 or 8.6 or if made voluntarily by a User, be at the relevant User's cost.

7.5 This Paragraph 7.5 applies where the Company, having issued a Security Restriction Notice, reasonably believes that Load Switching Regimes and/or the Randomised Offset Limit allocated in respect of the Customers of a User since the Effective Date of the relevant Load Managed Area Notice have materially contributed to the risk to Security of Supply in respect of which the Security Restriction Notice has been issued.

7.6 Where Paragraph 7.5 applies, the Company may also send a separate Compliance Notice to the relevant User, and a copy to the Authority, requiring the User:

a. to change at its own cost and within such period of time as the Company considers reasonable the Load Switching Regimes and/or the Randomised Offset Limit in force at particular Metering Points in the area designated in the Security Restriction Notice to the Load Switching Regimes for the relevant Metering Points at the Effective Date of the relevant SRN (or, where the Company reasonably believes that it is necessary, to such other Load Switching Regimes as shall not have a materially adverse effect on Security of Supply); or

b. to take such other action as the Company considers reasonable.

8. EMERGENCY SECURITY RESTRICTION NOTICES

8.1 The Company may at any time issue an Emergency Security Restriction Notice where in the Company's opinion there is an immediate risk to Security of Supply. (For the avoidance of doubt, the issue of an Emergency SRN need not be restricted to Load Managed Areas.)

8.2 An Emergency SRN shall be sent to the User, all other Suppliers and the Authority.

8.3 An Emergency SRN shall be effective when received or deemed to be received in accordance with Paragraph 11.3 and shall indicate:

a. the geographical area to which it applies, by providing LLFC and/or DUoS Tariff ID and associated Load Switching Regimes for each and postcode (or such other method agreed as per Paragraph 5.3 (a));

b. the time or times of day into which Demand cannot be moved or added as a result of changes to Load Switching Regimes;

c. the time or times of day during which there is sufficient capacity at the Effective Date of the Emergency SRN into which Demand can be moved;

d. the date and time from which the notice is effective; and

e. that it shall continue in force until withdrawn in writing by the Company by serving a notice on all Suppliers and the Authority.

8.4 The Company and the User acknowledge and agree that the issue of an Emergency SRN constitutes notice that:

a. any modifications of Customer Demand induced by changes to Load Switching Regimes in the area identified in that notice may threaten Security of Supply;

b. any future changes to Load Switching Regimes and/or the Randomised Offset Limit in force at particular Metering Points in that area may be subject to reversion to the Load Switching Regimes for the relevant Metering Points at the Effective Date of the Emergency SRN, or to such other Load Switching Regimes as shall not have a materially adverse effect on Security of Supply;

c. any changes to switching times in order to effect changes to Load Switching Regimes and/or the Randomised Offset Limit referred to in Paragraph 7.4 (b) will, if requested by the Company, be at the relevant User's cost;

d. where the User is replacing a Load Switching Device at a particular Metering Point, in the area identified in such a notice, the User shall use reasonable endeavours to ensure that the Load Switching Regime, and any other material characteristics of the existing Load Switching Device, are replicated on the new Load Switching Device (including the use of the Load Switching Regimes associated with a LLFC and/or DUoS Tariff ID at a particular Metering Point where these have been issued by the Company in accordance with Paragraph 5.3 (a)); and

e. where the User is unable to comply with Paragraph 8.4 (d) the User will consult with the Company and agree to alternative arrangements for that particular Metering Point.

8.5 This Paragraph 8.5 applies where the Company, having issued an Emergency SRN, reasonably believes that Load Switching Regimes and/or the Randomised Offset Limit allocated in respect of the Customers of a User have materially contributed to the risk to Security of Supply in respect of which the Emergency SRN has been issued.

8.6 Where Paragraph 8.5 applies, the Company may also send a Compliance Notice to that User, and a copy to the Authority, which notice shall require the User:

a. to change at its own cost and within such period of time as the Company considers reasonable the Load Switching Regimes and/or the Randomised Offset Limits in force at particular Metering Points in the area designated in the Emergency SRN to the Load Switching Regimes for the relevant Metering Points at the Effective Date of the relevant Security Restriction Notice (or, where the Company reasonably believes that it is necessary, to such other Load Switching Regimes as shall not have a materially adverse effect on Security of Supply); or

b. to take such other action as the Company considers reasonable,

c. provided that where the Company requires changes to Load Switching Regimes and/or the Randomised Offset Limits in an area which is not a Load Managed Area or to Load Switching Regimes and/or the Randomised Offset Limit which have not been modified by the User since the Effective Date of the current

Load Managed Area Notice, then the reasonable cost visits required to affect such changes shall be at the Company's cost.

8.7 Failure to comply with an Emergency SRN or a Compliance Notice shall constitute a breach of this Agreement and the Company may, with no prior notice to the User where the User is in such breach, De-energise any Metering Point affected by the Emergency SRN or Compliance Notice for which the User is Registered in MPAS.

9. CONFIDENTIALITY

9.1 Any notice issued by either of the Company or the User pursuant to this Schedule 8 shall be confidential if marked as such. Any other information may be made available to third parties.

10. APPEALS PROCEDURE

10.1 The Company and the User shall attempt to resolve in good faith any dispute in relation to this Schedule 8. Where the dispute remains unresolved after 10 Working Days, either of them may refer the dispute to the Authority for determination. Any determination by the Authority under this Paragraph 10 shall be final and binding.

11. NOTICES

11.1 Save as provided in Paragraph 11.2, a notice, approval, consent or other communication to be made by the Company or the User under or in connection with this Schedule 8 shall be in writing and shall be delivered personally or sent by first class post, courier or email to the other at the address specified for such purpose in that Party's Party Details.

11.2 An Emergency SRN shall be dictated by the Company to the User to the person(s) specified for such purpose in the User's Party Details on the telephone number so specified who shall record it and on completion shall repeat the notification in full to the Company and check that it has been accurately recorded.

11.3 An Emergency SRN shall be deemed received when the Company has dictated it to the User in accordance with Paragraph 11.2.

11.4 The Company shall also send an Emergency SRN in writing as soon as is reasonably practicable to the User in accordance with Paragraph 11.1. For the avoidance of doubt, such notice shall be for the record and shall not replace the notice given in accordance with Paragraph 11.2 but shall be deemed to be received in accordance with Clause 59.

12. REVIEW PROCEDURE

12.1 The Company shall;

a. no later than the latter of twelve months after its Effective Date or twelve months after its last review, review every Advisory Notice and every Load Managed Area Notice;

b. no later than the latter of six months after its Effective Date or six months after its last review, review every SRN and Emergency SRN; and

c. no later than the latter of three months after its Effective Date or three months after its last review, review every Compliance Notice,

issued by it pursuant to this Schedule 8 which is still in force.

12.2 Where the Company reasonably believes that the relevant notice should continue in force, it shall notify all Suppliers and the Authority accordingly (together with its reasons), and reissue MPAN information as detailed in Paragraphs 5.3, 7.3 and 8.3 (where applicable).

12.3 Notwithstanding Paragraph 12.1, where the Company reasonably believes that the relevant notice should not continue in force, it shall withdraw the relevant notice and notify all Suppliers and the Authority.

13. ROTA LOAD BLOCK ALPHA IDENTIFIERS

13.1 By 31 August each year, the Company shall provide to the Nominated Central Source the Alpha Identifier for each Postcode within which Customers have connections to the Company's Distribution System.

13.2 The Company shall ensure that the Nominated Central Source collates the information referred to in Paragraph 13.1 with the comparable information of other DNO/IDNO Parties. The collated information shall be provided free of charge, and shall be contained in a file in .csv format and shall show each relevant Postcode in one column with the applicable Alpha Identifier and Distributor ID in separate columns. The Company shall ensure that, by 30 September of the relevant year, the Nominated Central Source shall provide the collated information to the Secretariat using the method agreed between the Nominated Central Source and the Secretariat. By the second Working Day of October each year, the Secretariat shall publish, free of charge, the collated information on the Website, in a .csv file format, and upon such publication, the Secretariat shall issue a notification to each User (where it is a Supplier Party) and the DNO/IDNO Parties that such publication has occurred.

13.3 During the 12-month period commencing on 1 November of each year, the User shall (where it is a Supplier Party) take reasonable steps to notify each Alpha Identifier provided to it in accordance with Paragraph 13.2 to the User's Customers that have Customer Installations located within the relevant Postcode area. The User shall only be obliged to take such steps to the extent it is reasonably practicable to do so, and shall be taken to have complied with its obligation in respect of a particular Customer Installation where the Bills (or statements of account) sent to the Customer in respect of that Customer Installation, during such 12-month period, display (where reasonably practicable, in a square box on the front page, and in the uppermost third, of such Bills) the Alpha Identifier made available to the User on the Website during the October preceding that November.

13.4 In this Paragraph 13:

Alpha Identifier	means the single letter assigned to each Postcode area covered by the Company's Distribution System for the purpose of identifying (insofar as reasonably practicable) the Load Block with which Customers in that Postcode area are associated;
Bill	has the meaning given to that term in Condition 1 of the Supply Licences;
Distributor ID	means the first two-digit numbers of the MPAN;
Electricity Supply Emergency Code	means the code of that name designated as such by the Secretary of State from time to time;
Load Block	means a geographic grouping of consumer load for the purpose of applying rota disconnections, as such rota disconnections are more fully described in the Electricity Supply Emergency Code;
Nominated Central Source	means a person agreed between the majority of DNO/IDNO Parties for the purpose of this Paragraph 13; and

Postcode	means the full Post Office postcode (outcode and incode) of up to 8 characters, which will be presented with a space between the outcode and the incode (and no other spaces).

APPENDIX A

Load Managed Area Notice												
GSP Area (A_, B_, C_, etc...)	**Notice Effective From Date**	**Notice End Date (leave empty if outgoing)**	**Restriction Start Time (leave empty if 24 hours per day)**	**Restriction End Time (leave empty if 24 hours per day)**	**Restriction Start Month (leave empty if full year)**	**Restriction End Month (leave empty if full year)**	**Geographical Area/Post Code Outcode**	**LLFC or DUoS Tariff ID**	**Former RTS Group Code (where relevant)**	**Existing SSC**	**Existing SSC for peak/off-peak**	**SSC for replicating peak/off-peak**

Load Managed Area Notice (columns continued)												
SSC description for replicating peak/off-peak	**TPR replicating peak**	**Time periods for peak**	**TPR replicating off-peak**	**Time periods for off-peak**	**Existing SSC for combined switched load(s)**	**Combined SSC for replicating switched load(s)**	**Combined SSC description for replicating switched load(s)**	**Combined TPR replicating switched load(s)**	**Combined TPR time periods (in MDD) - Max**	**Time periods for switched load 1 - space heating - Max**	**Time periods for switched load 2 - water heating - Max**	**Notes**

SCHEDULE 9: ACCESSION AGREEMENT

THIS ACCESSION AGREEMENT is made on 20

BETWEEN:

A [ ] a company incorporated in [ ] (registered number [ ]) whose registered office is at [ ] (the "New Party"); and

B DCUSA LIMITED a company incorporated in England and Wales (registered number [ ]) whose registered office is at [ ] ("DCUSA Ltd").

WHEREAS

A The DNO Parties and IDNO Parties are required, by their licences, to be party to, comply with, and maintain the DCUSA.

B The Supplier Parties are required, by their licences, to be party to, and comply with, the DCUSA.

C The CVA Registrants are under certain obligations, under other industry agreements, regarding distribution use of system arrangements, and have agreed to accede to the DCUSA in order to meet those obligations.

D The OTSO Party wishes to connect to and use the systems of the DNO Parties and the IDNO Parties, and has agreed to accede to the DCUSA in order to do so.

E The Gas Supplier Parties have agreed to accede to the DCUSA in order to allow them to install, operate, inspect, maintain, repair, renew, reposition, replace and remove Smart Metering Comms Hub Devices.

F The Crowded Meter Room Coordinator has agreed to accede to the DCUSA in order to allow it to undertake Crowded Meter Room Works.

G The SIP Parties have agreed to accede to the DCUSA in order to allow them to undertake Safe Isolation Works.

H DCUSA Ltd is a company established under the DCUSA to facilitate the operation of the DCUSA.

I The New Party wishes to become a party to, and bind itself by, and DCUSA Ltd has agreed (on behalf of the DCUSA Parties) to admit the New Party as a party to, the DCUSA in accordance with the terms and conditions of this Accession Agreement.

NOW IT IS HEREBY AGREED as follows:

1 The "DCUSA" is the Distribution Connection and Use of System Agreement designated as such by the Gas and Electricity Markets Authority (as such agreement is amended from time to time). A "DCUSA Party" is a party from time to time to the DCUSA. Unless the context otherwise requires, the words and expressions defined in the DCUSA shall bear the same respective meanings when used herein.

2 With effect from [ACCESSION DATE]:

a. the New Party hereby accepts its admission to the DCUSA, and undertakes to DCUSA Ltd (acting on behalf of itself and each DCUSA Party) to perform its obligations under the DCUSA in accordance with, and subject to, the terms and conditions thereof; and
b. DCUSA Ltd (acting on behalf of itself and each DCUSA Party) hereby admits the New Party as a party to the DCUSA.

3 The New Party's Party Details shall, initially, be as set out in the schedule hereto and those Party Details shall be added to schedule 11 of the DCUSA in accordance with clause 57.5 of the DCUSA.

4 This Accession Agreement may be executed in two counterparts, each signed by one of the parties hereto.

5 This Accession Agreement shall be governed by and construed in accordance with the laws of England and Wales. The parties hereto hereby submit to the exclusive jurisdiction of the courts of England and Wales and of Scotland.

THIS ACCESSION AGREEMENT has been entered into on the date first stated above.

SIGNED by ……..)

duly authorised)

for and on behalf of) ……

NEW PARTY)

SIGNED by ……)

duly authorised)

for and on behalf of) ……

DCUSA LTD

SCHEDULE 9A: DCUSA PARTY NOVATION AGREEMENT

THIS NOVATION is made on

BETWEEN:

1 [ ] a company incorporated in England and Wales (registered number [ ]) whose registered office is at [ ] (the "**Outgoing Party**"); and

2 [ ] a company incorporated in England and Wales (registered number [ ]) whose registered office is at [ ] (the "**Incoming Party**"); and

3 **DCUSA LIMITED** a company incorporated in England and Wales (registered number 5812381) whose registered office is at Northumberland House, 303 - 306 High Holborn, London, WC1V 7JZ (acting on behalf of itself and each other DCUSA Party, "**DCUSA Ltd**").

WHEREAS

A DCUSA Ltd is a company established under the DCUSA to facilitate the operation of the DCUSA. The Outgoing Party is a party to, and is bound by, the DCUSA.

B The Outgoing Party wishes to transfer its rights and obligations under the DCUSA to the Incoming Party.

C The Incoming Party wishes to take a transfer of the Outgoing Party's rights and obligations under the DCUSA.

D DCUSA Ltd agrees to such transfer on behalf of itself and each other DCUSA Party.

NOW IT IS HEREBY AGREED as follows:

1 In this Novation:

a. "**DCUSA**" means the Distribution Connection and Use of System Agreement designated as such by the Gas and Electricity Markets Authority (as such agreement is amended from time to time);

b. "**DCUSA Party**" means a party from time to time to the DCUSA (but excluding the Outgoing Party and the Incoming Party); and

c. "**Effective Date**" means [TBC].

2 Unless otherwise defined in this Novation, the definitions and rules of interpretation applying in the DCUSA shall apply to this Novation.

3 With effect from the Effective Date, and in consideration of the reciprocal obligations under this Novation (the receipt and sufficiency of which are hereby acknowledged by each of the parties):

a. the Outgoing Party transfers all its outstanding rights and obligations under the DCUSA to the Incoming Party;

b. the Incoming Party shall enjoy all the outstanding rights of the Outgoing Party under the DCUSA, and agrees to perform and to be bound by Outgoing Party's outstanding obligations under the DCUSA, as if [the Incoming Party was the original party to the Outgoing Party's Accession Agreement in place of the Outgoing Party] / [the Outgoing Party's rights and obligations under the DCUSA had always been subject

to the Incoming Party's Accession Agreement]The two options here (and also in 3(c) and 4) depend on whether the Incoming Party is already a DCUSA Party.;

c. DCUSA Ltd agrees to perform and be bound by the DCUSA in every way as if [the Incoming Party were the original party to the Outgoing Party's Accession Agreement in place of the Outgoing Party] / [the Outgoing Party's rights and obligations under the DCUSA had always been subject to the Incoming Party's Accession Agreement]; and

d. DCUSA Ltd and the Outgoing Party release each other from all outstanding and future obligations under the DCUSA, and each discharge the other from any and all claims under or in connection with the DCUSA (whether known or unknown).

4 From the Effective Date, each of DCUSA Ltd and the Incoming Party shall have the right to enforce the DCUSA against one another with respect to matters arising before, on or after the Effective Date as if [the Incoming Party was the original Party to the Outgoing Party's Accession Agreement (and the Incoming Party entity shall be deemed to have acceded to the DCUSA)] / [the rights and obligations under the Outgoing Party's Accession Agreement had always been subject to the Incoming Party's Accession Agreement].

5 This Novation may be executed in counterparts, each signed by one of the parties hereto.

6 This Novation shall be governed by and construed in accordance with the laws of England and Wales. The parties hereto hereby submit to the exclusive jurisdiction of the courts of England and Wales and of Scotland.

THIS NOVATION has been entered into on the date first stated above.

SIGNED by ……..)

duly authorised for and on behalf of) ……

[OUTGOING PARTY NAME])

SIGNED by ……..)

duly authorised for and on behalf of) ……

[INCOMING PARTY NAME])

SIGNED by ……..)

duly authorised for and on behalf of) ……

DCUSA LTD)

SCHEDULE 10: DCUSA LTD

1. BACKGROUND

1.1 *Establishment of joint venture.*The Parties have agreed to establish a joint venture company to carry on the Business.

1.2 *DCUSA Ltd.* DCUSA Ltd was incorporated in England and Wales on 10 May 2006, and on the date the DCUSA became effective had an authorised share capital of £1,000 divided into 1,000 ordinary shares of £1 each of which three shares have been issued.

1.3 *Shareholders of DCUSA Ltd*. It is intended that the shareholders of DCUSA Ltd shall be limited to the Parties from time to time, each of whom shall hold a single share, and any nominee as referred to in Paragraph 3.2 (a).

1.4 *Regulation of rights.* The Shareholders have agreed that their respective rights as shareholders in DCUSA Ltd shall be regulated by the provisions of this Schedule (which, for the avoidance of doubt, shall include the provisions of the Annexes hereto) and DCUSA Ltd has agreed with the Shareholders to comply with such of the matters contained in this Schedule as relate to DCUSA Ltd.

2. ADDITIONAL DEFINITIONS AND INTERPRETATION

2.1 *Definitions.* In this Schedule, except where the context otherwise requires:

Articles	means the Articles of Association of DCUSA Ltd as the same may be amended from time to time, which Articles shall, on the Completion Date, be in the form set out in Annex 4 to Schedule 10.
Board	means the board of directors of DCUSA Ltd.
Business	means acting as a corporate vehicle in relation to this Agreement pursuant to: a. a resolution of the Panel (or any Working Group) passed pursuant to Clause 7 and effective by virtue of the provisions of that Clause; or b. a decision of the Secretariat acting within the scope of its authority, which it is necessary or desirable to implement by means of a binding contract on an arms-length basis.
Company Chairperson	means the chairperson of the Board from time to time.
Company Secretary	means the company secretary of DCUSA Ltd from time to time.
Completion Date	means the first Working Day after the date on which this Agreement becomes effective or such later date as shall be agreed by the Panel.
Directors	means the directors of DCUSA Ltd from time to time.
Shareholders	means the persons from time to time registered as holders of Shares.
Shares	means ordinary shares of £1 each in the ordinary share capital of DCUSA Ltd and any shares issued in exchange thereof by way of conversion or reclassification and any shares representing or deriving from such shares as a result of any increase in or reorganisation or variation of the ordinary share capital of DCUSA Ltd.

2.2 *Interpretation.* The Parties and DCUSA Ltd acknowledge and agree that, notwithstanding any other provision of this Agreement:

a. DCUSA Ltd is a party to this Agreement solely for the purposes of this Schedule and the obligations expressly imposed on it by this Agreement. DCUSA Ltd shall only be bound by those provisions of this Agreement that are set out (or referred to) in this Schedule or that are set out elsewhere and expressly refer to DCUSA Ltd;
b. DCUSA Ltd shall have only such rights under or in respect of this Agreement as are set out (or referred to) in this Schedule or as are set out elsewhere and expressly refer to DCUSA Ltd (or to the Parties where such expression is defined as including DCUSA Ltd);
c. the consent or agreement of DCUSA Ltd shall not be required to any modification, abrogation, amendment or suspension of any provision of this Agreement which is not set out in this Schedule, and DCUSA Ltd

hereby irrevocably waives any rights which it might be considered, or held, to have to consent or agree to any such modification, abrogation, amendment or suspension;

d. the rights of the Parties as Shareholders are set out exclusively in this Schedule and no other provision of this Agreement shall apply to the regulation of the rights and obligations of Shareholders in their capacity as Shareholders or as between the Shareholders (or any of them) and DCUSA Ltd; and
e. DCUSA Ltd shall take no action (and the Shareholders shall not take any step which could cause DCUSA Ltd to take any such action) which could prejudice in any way the rights or interests of any Party under this Agreement.

3. ESTABLISHMENT OF DCUSA LTD AND NEW PARTIES

3.1 *Completion*. On the Completion Date, each Party, each Director and DCUSA Ltd shall perform its respective obligations set out in Annex 1 to this Schedule.

3.2 *New Parties*. The Panel shall ensure that the Application Form allows an Applicant to elect whether it wishes to become a Shareholder on its accession as a new Party (if successful). Upon the accession of a new Party in accordance with Clause 4, where that Party elected to become a Shareholder in its Application Form, the Directors shall either:

a. transfer to such Party one Share held by a nominee in accordance with the provisions of Paragraph 10.3 or 10.4; or
b. allot to such Party one unissued Share (and the Shareholders agree that, where no Shares are otherwise available for issue, they will exercise the voting rights attaching to their Shares to procure that all necessary steps are taken to create and/or authorise the issue of further Shares).

3.3 In the case of a Party which is not a Shareholder (for whatever reason), but which applies to the Panel to become a Shareholder, the Directors shall either:

a. transfer to such Party one Share held by a nominee in accordance with the provisions of Paragraph 10.3 or 10.4; or
b. allot to such Party one unissued Share (and the Shareholders agree that, where no Shares are otherwise available for issue, they will exercise the voting rights attaching to their Shares to procure that all necessary steps are taken to create and/or authorise the issue of further Shares).

4. DCUSA LTD'S BUSINESS

4.1 *Compliance*. Each Shareholder agrees with each other Shareholder to exercise its rights under this Schedule and as a shareholder in DCUSA Ltd so as to ensure that:

a. DCUSA Ltd performs and complies with all its obligations under this Agreement and complies with the restrictions (if any) imposed on it by the Articles; and
b. the Business is conducted in accordance with sound and good business practice with the intention of breaking even each year.

4.2 *Sole business of DCUSA Ltd.* The Shareholders and DCUSA Ltd acknowledge and agree that, unless and until the Shareholders give their explicit written consent, the business of DCUSA Ltd shall be confined to the Business.

4.3 *Independence of operations.* Each Shareholder acknowledges and agrees that DCUSA Ltd will have complete independence in its operations and undertakes not to take any action which obstructs or interferes

with, or seeks to obstruct or interfere with, the Business, provided that this Paragraph 4.3 shall not affect the manner in which any Shareholder may exercise its rights in respect of Shares held by it.

5. THE MANAGEMENT OF DCUSA LTD

5.1 Directors.

a. The Shareholders shall procure that the Directors shall be all the Panel Members from time to time, and each Director shall have an alternate for the purposes of this Schedule, such alternate being the Alternate allocated pursuant to Clause 6.
b. The Parties shall indemnify DCUSA Ltd against all claims, demands, liabilities, losses, costs and expenses which DCUSA Ltd may suffer or incur by reason of any claim by any Director in connection with their removal from office as a Director and the liability to indemnify shall be met:

   i. in the case of a Director who was elected to the Panel by the DNO Parties, severally and rateably by the DNO Parties in accordance with the same proportions by which each DNO Party's Basic Vote would be calculated in the month such liabilities, losses, costs and expenses were incurred;
   ii. in the case of a Director who was elected to the Panel by the Supplier Parties, severally and rateably by the Supplier Parties in accordance with the same proportions by which each Supplier Party's Basic Vote would be calculated in the month such liabilities, losses, costs and expenses were incurred; and
   iii. in the case of any other Director, as if it were a cost included within an Approved Budget.

5.2 *Company Chairperson.* The Company Chairperson shall be the person appointed as the Panel Chair from time to time. If the Company Chairperson is unable to be present at a meeting, the Company Chairperson may nominate another Director (or any Director's alternate) to act as Company Chairperson. If neither the Company Chairperson nor their nominee is present within half an hour after the time appointed for holding the meeting, the Directors present may appoint any one of their number to be Company Chairperson of that meeting.

5.3 *Committees.* The Directors may delegate any of their powers to committees of the Board consisting of such persons as the Directors may resolve. Any such committee shall exercise only powers expressly delegated to it and shall comply with any regulations imposed on it by the Board.

5.4 *Company Secretary.* The Company Secretary shall be the Secretary for the time being and from time to time.

5.5 Proceedings at Board Meetings.

a. Voting rights: Each Director shall have one vote. The Company Chairperson shall have no second or casting vote.
b. Frequency: The Board shall meet at intervals of not less than once in any period of three months unless otherwise agreed by the Directors and insofar as reasonably practicable meetings of the Board shall follow on immediately from meetings of the Panel. A meeting of the Board may be convened at any reasonable time at the request of any Director by written notice to the Company Secretary.
c. Meetings: Meetings of the Board may be held by conference telephone call provided that participants acknowledge that they can speak to and hear each other.
d. Notice: Each of the Directors shall be given notice by the Company Secretary of each meeting of the Board setting out details of the time, date and place of meeting at least five Working Days prior to the date of such meeting, provided that such period of notice may be shortened for particular meetings by unanimous written consent of all Directors entitled to attend and vote thereat.

e. Quorum: The quorum for each meeting of the Board shall be four Directors, at least one of whom must have been elected to the Panel by the DNO Parties and at least one of whom must have been elected to the Panel by the Supplier Parties.

f. Resolutions: All resolutions of the Board shall be made by simple majority of those Directors present or participating by conference telephone call.

g. Written resolutions : A written resolution signed by all Directors shall be as valid and effective as a resolution passed by a meeting of the Board properly convened and constituted in accordance with the terms of this Schedule and the Articles.

h. Minutes: No later than five Working Days after each Board meeting, the Company Secretary shall circulate minutes of that meeting to each of the Directors.

5.6 *Exercise of Shareholders' rights*. The Shareholders shall exercise the rights attaching to their Shares in the manner best calculated to secure the implementation of decisions taken by the Panel, by the Parties in accordance with Section 1C, or (where this Agreement provides that the decision of the Authority is to be binding) by the Authority, and shall not exercise their rights in a manner which is inconsistent with any such decision.

6. RESERVED MATTERS

6.1 The Shareholders shall exercise the rights attaching to their shares to procure, so far as they are able, that DCUSA Ltd shall not take any action (and no resolution relating to such action shall be passed by DCUSA Ltd) in respect of the matters set out in Annex 2 to Schedule 10, except pursuant to a decision of the Panel in accordance with this Agreement.

6.2 For the avoidance of doubt, to the extent that DCUSA Ltd takes any action in respect of any matter set out in Annex 2 to Schedule 10 pursuant to a decision of the Panel in accordance with this Agreement, no resolution of the Shareholders shall be required to ratify such action.

7. DCUSA LTD'S EXPENDITURE

7.1 *Inclusion of expenditure in budgets.* The anticipated expenditure of DCUSA Ltd shall be included in any budget prepared pursuant to Clause 8, and shall be subject to approval in accordance with that Clause.

7.2 *DCUSA Ltd obligations.* The Shareholders shall exercise the rights attaching to their shares to procure that DCUSA Ltd shall not incur costs unless authorised by a budget approved pursuant to Clause 8, except insofar as is necessary in order to comply with legally binding obligations to which it is subject.

7.3 *Authorisation and reimbursement.* Expenditure by DCUSA Ltd shall be authorised by the Panel, submitted to the Secretariat for payment, and reimbursed by the Parties in accordance with the provisions of Clause 8.

8. ACCOUNTS

8.1 *Annual accounts.* At the end of each of Financial Year, or as soon as is reasonably practicable thereafter, DCUSA Ltd shall procure that an account shall be taken of all the assets and liabilities of DCUSA Ltd and of all the dealings and transactions of DCUSA Ltd during such financial year and that the Board shall prepare a report and accounts in accordance with the Companies Act 2006 to be audited within three months after the end of each Financial Year.

8.2 *Audit.* Any Party shall have the right at any time to require DCUSA Ltd to instruct the auditors of DCUSA Ltd to conduct a review in respect of the financial affairs of DCUSA Ltd. The cost of such review shall be borne by the Party requesting such review, unless such review is approved by the Directors, in which case it shall be borne by DCUSA Ltd. If any such review is requested, DCUSA Ltd shall procure that DCUSA Ltd's auditors are given all reasonable assistance to complete the review within a reasonable period of time.

9. DISTRIBUTION POLICY

9.1 The Shareholders shall take such action as may be necessary to procure that:

a. *Annual general meeting.* DCUSA Ltd's annual general meeting at which audited accounts in respect of the preceding Financial Year are laid before the Shareholders is held not later than the date falling six months after the end of that Financial Year;
b. *Auditors' report.* DCUSA Ltd's auditors are instructed, at the expense of DCUSA Ltd, to report on the amount of the profits available for distribution by DCUSA Ltd for each accounting reference period at the same time as they sign their report on DCUSA Ltd's audited accounts for the accounting reference period in question;
c. *Distribution of profits.* DCUSA Ltd distributes to and among the Shareholders within 20 Working Days of approval of the audited accounts 100 per cent of its profits available in each year, subject to the appropriation of such reasonable and proper reserves for working capital or otherwise as the Board may consider appropriate; and
d. *Shareholder guarantees.* if any indemnity, guarantee or other assurance against loss is given by a Shareholder for any obligation or liability of DCUSA Ltd at the request of DCUSA Ltd, all the other Shareholders shall indemnify such Shareholder in respect of any liability arising out of such indemnity, guarantee or other assurance against loss severally and rateably in accordance with the same proportion as would be used to calculate each Party's Cost Contribution in accordance with Clause 8 were such calculation to be carried out on the date such liability arises.

10. TRANSFER OF SHARES

10.1 *Restrictions on transfer.* Otherwise than in accordance with the following provisions of this Paragraph 10, no Shareholder shall:

a. pledge, mortgage (whether by way of fixed or floating charge) or otherwise encumber its legal or beneficial interest in its Shares; or
b. sell, transfer or otherwise dispose of any of such Shares (or any legal or beneficial interest therein); or
c. enter into any agreement in respect of the votes attached to Shares; or
d. agree, whether or not subject to any condition precedent or subsequent, to do any of the foregoing.

10.2 *Intra-group transfers.* A Shareholder may transfer its Share to its Affiliate in circumstances where such person becomes a Party at the same time as such Shareholder ceases to be a Party.

10.3 *Retiring Shareholders.* If any Shareholder ceases to be a Party for any reason (the **Retiring Shareholder**), then upon written notice to the Retiring Shareholder by any other Shareholder, the Retiring Shareholder shall transfer at par to a nominee for all the Shareholders (other than the Retiring Shareholder) selected by the Directors the Share held by the Retiring Shareholder. All costs and expenses of such transfer shall be for the account of the Retiring Shareholder.

10.4 Enforced transfer. If a Retiring Shareholder fails or refuses to transfer any Shares in accordance with its obligations under Paragraph 10.3, the Directors may authorise DCUSA Ltd to execute and deliver a transfer from the Retiring Shareholder to a nominee on behalf of the Retiring Shareholder. DCUSA Ltd may accept the consideration for the transfer and hold it on trust for the Retiring Shareholder, which acceptance shall be a good discharge to the nominee, and may set off such amount against the costs and expenses of the transfer. The Directors shall cause the transferee to be registered as the holder of such Share and following the registration of the transfer the validity of the proceedings shall not be questioned by any person.

10.5 *Nominee's holding.* The nominee referred to in Paragraphs 10.3 and 10.4 shall hold Shares transferred to it until such time as it is directed by the Directors to transfer them (or some of them) in accordance with Paragraph 3.2. For the avoidance of doubt, wherever in this Schedule a percentage figure of the number of Shares in issue is referred to, this figure shall be calculated as if all Shares held by the nominee were not in issue.

11. DURATION AND TERMINATION

11.1 This Schedule shall continue in full force and effect until the earlier of:

a. the termination of this Agreement; and
b. the date on which an effective resolution is passed, or a binding order is made, for the winding up of DCUSA Ltd,

provided, however, that this Schedule shall cease to have effect as regards any Party who, having been entitled under the terms of this Schedule to hold Shares, ceases to hold any Shares.

12. SHAREHOLDERS GENERALLY

12.1 The Shareholders shall procure that:

a. save for any nominee referred to in Paragraph 10.3, only the Parties shall acquire Shares (whether by transfer or allotment);
b. no Party shall be a Shareholder unless and until it has agreed to be bound by this Schedule in the capacity of a Shareholder (which a Party shall be taken to have done by being a signatory to an Accession Agreement);
c. the Directors shall neither transfer nor allot any Share or Shares other than as set out in Annex 1 to Schedule 10 or Paragraph 3.2, 10.4 or 10.5; and
d. save in the case of a nominee as referred to in Paragraphs 10.3 and 10.4, no Party shall at any point hold more than one Share.

13. INTELLECTUAL PROPERTY

If and to the extent that any Shareholder discloses any of its Intellectual Property to DCUSA Ltd, unless that Shareholder is unable to do so, it shall grant (and shall be deemed to have granted), from the date of such disclosure, licences of such Intellectual Property to DCUSA Ltd for use in connection with the Business and for no other purpose whatsoever. Unless expressly agreed otherwise, any such licence shall be non-assignable, irrevocable, non-exclusive, perpetual and royalty-free.

14. CONFLICT WITH THE ARTICLES

In the event of any ambiguity created by or discrepancy between the provisions of this Schedule and the Articles, it is the intention that the provisions of this Schedule shall prevail and accordingly the Shareholders shall exercise all voting and other rights and powers available to them so as to give effect to the provisions of this Schedule and shall further, if necessary, procure any required amendment to the Articles.

15. FURTHER ASSURANCE

Each Shareholder shall co-operate with the other Shareholders and execute and deliver to the other Shareholders such other instruments and documents and take such other actions as may be reasonably requested from time to time in order to carry out, evidence and confirm their rights under, and the intended purpose of, this Schedule.

ANNEX 1 TO SCHEDULE 10

Completion

1 *Board meeting.* On the Completion Date a meeting of the Board shall be held and a resolution shall be passed to convene an Extraordinary General Meeting of DCUSA Ltd, immediately following the conclusion of the Board meeting, for the purposes referred to in paragraph 2 below.

2 *Extraordinary general meeting.* Upon the calling of the Extraordinary General Meeting referred to in paragraph 1 above, the Shareholders shall give consent to short notice in respect of such Extraordinary General Meeting and shall vote thereat in favour of resolutions:

a. authorising the Directors to issue and allot at par one Share to each Party who is not at that time a Shareholder (the Subscribing Parties);
b. amending clause 3 of the Memorandum of Association of DCUSA Ltd by insertion of the new sub-clause set out in Annex 3 to Schedule 10 as sub-clause 3(1) and renumbering the remaining sub-clauses accordingly; and
c. adopting the regulations in the form set out in Annex 4 as the Articles of Association of DCUSA Ltd.

3 *Initial subscription for Shares.* Forthwith upon the passing of the resolutions pursuant to paragraph 2 above, each Subscribing Party shall complete, sign and deliver to DCUSA Ltd an application for the allotment to that Party of one Share in consideration of the payment by cash of £1 on allotment in respect of each such Share.

4 *Board meeting.* A further meeting of the Board shall be held and resolutions passed to:

a. approve the application of each Subscribing Party for a Share; and
b. authorise the name of each Subscribing Party to be entered in the Register of Members of DCUSA Ltd as holder of one Share and directing the sealing of a certificate in respect thereof.

5 *Allotment.* Upon receipt of the relevant consideration moneys referred to in paragraph 3 above, DCUSA Ltd shall allot and issue one Share to each Party whose application has been approved pursuant to paragraph 4 above and shall register each such Party as the holder of that Share and shall prepare, seal and deliver to each such Party a share certificate in respect thereof in its name.

ANNEX 2 TO SCHEDULE 10

Limitations on Dealings

1 The acquisition or disposal by DCUSA Ltd of any share capital or other securities of any person.

2 The reduction of DCUSA Ltd's share capital, any variation of the rights attaching to any class of shares in its capital, or any redemption, purchase or other acquisition by DCUSA Ltd of any shares or other securities of DCUSA Ltd.

3 The making of decisions relating to material contracts or arrangements to which DCUSA Ltd is a party.

4 The making by DCUSA Ltd of a material claim, disclaimer, surrender, election or consent for tax purposes.

5 The incurring of costs in respect of any period which are not envisaged by a budget drawn up and approved pursuant to Clause 8.

6 Entering into any contract or guarantee with a Shareholder or an Affiliate of a Shareholder.

7 Entering into any contract of a material nature.

8 The obtaining by DCUSA Ltd of finance from a third party lender.

9 The making of any change to DCUSA Ltd's Memorandum of Association or the Articles.

10 The presentation of any petition for the winding-up of DCUSA Ltd or the making of any application for an administration order in relation to DCUSA Ltd or for the appointment of an administrator or receiver of DCUSA Ltd.

11 The commencement, settlement or defence of any litigation, arbitration or other proceedings brought by or against DCUSA Ltd for an amount of more than £25,000.

12 The increase of the amount of debt with a maturity greater than three months owed by DCUSA Ltd.

13 The entering into of an agreement of a type or length which is unusual in the context of the Business.

ANNEX 3 TO SCHEDULE 10

Amendment to Objects clause

To carry on the business of acting as a corporate vehicle in relation to, and in accordance with, the Distribution Connection and Use of System Agreement designated as such by the Gas and Electricity Markets Authority (established by Section 1(1) of the Utilities Act 2000), as such agreement is amended from time to time.

ANNEX 4 TO SCHEDULE 10

ARTICLES OF ASSOCIATION

THE COMPANIES ACT 1985-1989

ARTICLES OF ASSOCIATION

of

DCUSA LIMITED (the “Company”)

(Registered No. 5812381)

(adopted by Special Resolution passed on [DATE])

1. ADOPTION OF TABLE A

In these articles "Table A" means Table A scheduled to the Companies (Tables A to F) Regulations 1985 as amended prior to the date of incorporation of the Company. The regulations contained in Table A shall, except where they are excluded or modified by these articles, apply to the Company and, together with these articles, shall constitute the articles of the Company. No other regulations set out in any statute concerning companies, or in any statutory instrument or other subordinate legislation made under any statute, shall apply as the regulations or articles of the Company.

2. INTERPRETATION

2.1 Words and expressions which bear particular meanings in Table A shall bear the same meanings in these articles.

2.2 In these articles:

Act	means the Companies Act 1985 (as amended from time to time).
Affiliate	means, in respect of any body corporate, a body corporate which is its subsidiary or holding company, or a company which is a subsidiary of that holding company, and each such company.
Authority	means the Gas and Electricity Markets Authority established by Section 1(1) of the Utilities Act 2000.
Panel means	the panel appointed pursuant to the DCUSA.
Panel Members	means the members of the Panel appointed pursuant to the DCUSA.
DCUSA	means the Distribution Connection and Use of System Agreement designated as such by the Authority (as amended from time to time).
Party	means a party to the DCUSA (other than the Company).
Retiring Shareholder	has the meaning given to that expression in Article 10.4.
Shareholder	means the holder of a share or shares in the Company.

2.3 References in these articles to writing include references to any method of representing or reproducing words in a legible and non-transitory form.

2.4 Headings are for convenience only and shall not affect construction.

2.5 If, and for so long as, the Company has only one member, these articles shall (in the absence of any express provision to the contrary) apply with such modification as may be necessary in relation to such a company.

3. SHARE CAPITAL

The authorised share capital of the Company at the date of adoption of this article is £1,000 divided in 1,000 shares of £1 each.

4. RESTRICTION ON SHARE OWNERSHIP

Save with the prior written consent of the directors, no person other than a nominee as referred to in Articles 9.4 and 9.5 shall be the holder of more than one share of the Company at any time.

5. RIGHTS ATTACHING TO SHARES

5.1 The Shareholders shall exercise all rights attached to their shares to procure, so far as they are able, that no action shall be taken or resolution passed by the Company in respect of those matters set out in Article 5.2 except pursuant to a decision of the Panel, taken in accordance with the provisions of the DCUSA. The right to vote on the matters set out in Article 5.2 shall constitute rights attaching to the Shares

5.2 The matters referred to in Article 5.1 are:

5.2.1 the acquisition or disposal by the Company of any share capital or other securities of any person;

5.2.2 the reduction of the Company's share capital, any variation of the rights attaching to any class of shares in its capital, or any redemption, purchase or other acquisition by the Company of any shares or other securities of the Company;

5.2.3 the making of decisions relating to material contracts to which the Company is a party;

5.2.4 the making by the Company of a material claim, disclaimer, surrender, election or consent for tax purposes;

5.2.5 the incurring of costs in respect of any period which are not envisaged by a budget drawn up and approved pursuant to clause 8 of the DCUSA;

5.2.6 the making of any contract or guarantee with a member or an Affiliate of a Shareholder;

5.2.7 the making of any contract of a material nature;

5.2.8 the obtaining by the Company of finance from a third-party lender;

5.2.9 the making of any change to the Company's Memorandum of Association or these articles;

5.2.10 the presentation of any petition for the winding-up of the Company or the making of any application for an administration order in relation to the Company or for the appointment of an administrator or receiver of the Company;

5.2.11 the commencement, settlement or defence of any litigation, arbitration or other proceedings brought by or against the Company for an amount of more than £25,000;

5.2.12 the increase of the amount of debt with a maturity greater than three months owed by the Company; and

5.2.13 the entering into of an agreement of a type or length which is unusual in the context of the business of the Company.

5.3 Each Shareholder shall be entitled to dividends in respect of its share calculated in the same proportions as would be used to calculate that Shareholder's cost contribution in accordance with clause 8 of the DCUSA on the date the dividend is calculated (rather than in proportion to the amounts paid up on the shares). Regulation 104 of Table A shall be modified accordingly.

5.4 Subject to the provisions of the Act and to any rights conferred on the holders of any other shares, any share may be issued with or have attached to it such rights and restrictions as the Company may by ordinary

resolution decide or, if no such resolution has been passed or so far as the resolution does not make specific provision, as the directors may decide. Regulation 2 of Table A shall not apply.

6. UNISSUED SHARES

Subject to the provisions of the Act and to these articles, any unissued shares of the Company (whether forming part of the original or any increased capital) shall be at the disposal of the directors who may (subject to Article 4) offer, allot, grant options over or otherwise dispose of them to such persons at such times and for such consideration and upon such terms and conditions as they may determine.

7. INITIAL AUTHORITY TO ISSUE RELEVANT SECURITIES

Subject to any direction to the contrary which may be given by the Company in general meeting and to Article 4, the directors are unconditionally authorised to exercise all powers of the Company to allot relevant securities. The maximum nominal amount of relevant securities that may be allotted under this authority shall be the nominal amount of the unissued share capital at the date of incorporation of the Company or such other amount as may from time to time be authorised by the Company in general meeting, The authority conferred on the directors by this article shall remain in force for a period of five years from the date of incorporation of the Company but may be revoked, varied or renewed from time to time by the Company in general meeting in accordance with the Act.

8. EXCLUSION OF RIGHTS TO OFFERS ON A PRE EMPTIVE BASIS

Section 89(1) of the Act shall not apply to the allotment by the Company of any equity security.

9. TRANSFER OF SHARES

9.1 The instrument of transfer of a subscriber's share which is not fully paid need not be executed by or on behalf of the transferee. Regulation 23 of Table A shall be modified accordingly.

9.2 Otherwise than in accordance with Articles 9.3 and 9.4, no Shareholder shall:

9.2.1 pledge, mortgage (whether by way of fixed or floating charge) or otherwise encumber its legal or beneficial interest in its shares; or

9.2.2 sell, transfer or otherwise dispose of any of such shares (or any legal or beneficial interest therein); or

9.2.3 enter into any agreement in respect of the votes attached to shares; or

9.2.4 agree, whether or not subject to any condition precedent or subsequent, to do any of the foregoing.

9.3 A member may transfer its share to an Affiliate in circumstances where such Affiliate becomes a Party at the same time as such member ceases to be a Party.

9.4 If any Shareholder ceases to be a Party for any reason (the Retiring Shareholder), then upon written notice to the Retiring Shareholder by any other Shareholder, the Retiring Shareholder shall transfer at par to a nominee for all the Shareholders (other than the Retiring Shareholder) selected by the directors the Share

held by the Retiring Shareholder. All costs and expenses of such transfer shall be for the account of the Retiring Shareholder.

9.5 If a Retiring Shareholder shall fail or refuse to transfer any Shares in accordance with its obligations under Article 9.4, the directors may authorise the Company to execute and deliver a transfer from the Retiring Shareholder to a nominee on behalf of the Retiring Shareholder. The Company may accept the consideration for the transfer and hold it on trust for the Retiring Shareholder, which acceptance shall be a good discharge to the nominee and may set off such amount against the costs and expenses of the transfer. The directors shall cause the transferee to be registered as the holder of such shares and following the registration of the transfer the validity of the proceedings shall not be questioned by any person.

9.6 The nominee referred to in Articles 9.4 and 9.5 shall hold shares transferred to it until such time as it is directed by the directors to transfer them (or some of them) to one or more parties. For the avoidance of doubt, wherever in these Articles a percentage figure of the number of shares in issue is referred to, this figure shall be calculated as if all shares held by the nominee were not in issue.

10. PROCEEDINGS AT GENERAL MEETINGS

10.1 The quorum at any general meeting shall consist of six Shareholders present in person or by proxy: provided that at least two such Shareholders must be DNO Parties and at least two such Shareholders must be Supplier Parties (where the terms DNO Parties and Supplier Parties have the respective meaning given to them in the DCUSA). Regulation 40 of Table A shall be modified accordingly.

10.2 If, and for so long as, the Company has only one member, that member or the proxy for that member or, where that member is a corporation, its duly authorised representative shall be a quorum at any general meeting of the Company or of the holders of any class of shares. Regulation 40 of Table A shall be modified accordingly.

10.3 The chairperson at any general meeting shall not be entitled to a second or casting vote. Regulation 50 of Table A shall not apply.

10.4 In the case of a corporation, a resolution in writing may be signed on its behalf by a director or the secretary of the corporation or by its duly appointed attorney or duly authorised representative. Regulation 53 of Table A shall be extended accordingly.

11. VOTES OF MEMBERS

At a general meeting, but subject to any rights or restrictions attached to any shares, on a show of hands every member who (being an individual) is present in person or (being a corporation) is present by a duly authorised representative and every proxy for any member (regardless of the number or the holdings of the members for whom that member is a proxy) shall have one vote, and on a poll every member who is present in person or by proxy shall have one vote for every share of which the member is the holder. Regulation 54 of Table A shall not apply.

12. DELIVERY OF PROXIES

The instrument appointing a proxy shall be in writing from a duly authorised representative of the member. The instrument appointing a proxy and the power of attorney or other authority, if any, under which it is signed or a certified copy of that power or authority shall be delivered to the registered office of the Company or at such other place within the United Kingdom as is specified for that purpose in the notice convening the meeting of the members, not less than

24 hours before the time appointed for the meeting or adjourned meeting at which the person named in the instrument proposes to act or in the case of a poll taken subsequently to the date of the meeting or the adjourned meeting, before the time appointed for taking of the poll, and in default the instrument of proxy shall not be treated as valid. Regulation 62 of Table A shall not apply.

13. ALTERNATE DIRECTORS

Each director shall have as their alternate for the purposes of these Articles the alternate allocated to them pursuant to clause 6 of the DCUSA. Regulation 65 of Table A shall not apply.

14. DELEGATION OF DIRECTORS' POWERS

The Directors may delegate any of their powers (with power to sub-delegate) to committees consisting of such person or persons (whether directors or not) as they may resolve. Any such committee shall exercise only powers expressly delegated to it and shall comply with any regulations imposed on it by the directors. Regulation 72 of Table A shall be modified accordingly and references in Table A to a committee of Directors or to a Director as a member of such a committee shall include a committee established under this article or such person or persons.

15. NO AGE LIMIT OR SHARE QUALIFICATION

No Director shall be required to retire or vacate their office, and no person shall be ineligible for appointment as a director, by reason of having attained any particular age. No shareholding qualification for directors shall be required.

16. EXCLUSION OF ROTATION REQUIREMENTS AND OTHER PROVISIONS

The Directors shall be the Panel Members from time to time. Regulations 73 to 80 (inclusive) and the last sentence of Regulation 84 of Table A shall not apply.

17. DISQUALIFICATION AND REMOVAL OF DIRECTORS

The office of a Director shall be vacated if the Director ceases to be a Panel Member. Regulation 81 of Table A shall not apply.

18. DIRECTORS'GRATUITIES AND PENSIONS

Regulation 87 of Table A shall not apply.

19. NOTICE AND CONDUCT OF BOARD MEETINGS

Notice of a meeting of the directors shall be deemed to be properly given to a director if it is given to them personally or sent to the director in writing to the director's last known address or any other address given by the director to the Company for this purpose, or by any other means authorised in writing by the director concerned. Notice shall be given in this manner to all directors including any director who is for the time being absent from the United Kingdom. A director may waive notice of any meeting either prospectively or retrospectively. All resolutions of the board shall be made by unanimous vote of the Directors present or participating by conference telephone. In the case of an equality

of votes, the chairperson shall not have a second or casting vote. Regulation 88 of Table A shall be modified accordingly.

20. QUORUM FOR BOARD MEETINGS

The quorum for meetings of the board shall be constituted by the attendance of four Directors, at least one of whom must have been elected as a Panel Member by the DNO Parties and at least one of whom must have been elected as a Panel Member by the Supplier Parties (where the terms DNO Parties and Supplier Parties have the respective meaning given to them in the DCUSA). Directors can attend in person, by means of their alternate or by way of conference telephone or video call throughout such meeting. Regulation 89 of Table A shall not apply.

21. PARTICIPATION IN BOARD MEETINGS BY TELEHONE

All or any of the members of the board or any committee of the board may participate in a meeting of the board or that committee by means of a conference telephone or video call provided that participants acknowledge that they can speak to and hear each other. A person so participating shall be deemed to be present in person at the meeting and shall be entitled to vote or be counted in a quorum accordingly. Such a meeting shall be deemed to take place where the largest group of those participating is assembled, or, if there is no such group, where the chairperson of the meeting is then situated.

22. RESOLUTION IN WRITING

A resolution in writing executed by all the directors or by all the members of a committee for the time being shall be as valid and effective as a resolution passed unanimously at a meeting of the board or, as the ease may be, of the committee properly convened and constituted. The resolution may be contained in one document or in several documents in like form each executed by one or more of the directors or members of the committee concerned. A resolution signed by an alternate director need not also be signed by the director to whom they are appointed and, if it is signed by a director who has appointed an alternate director, it need not be signed by the alternate director in that capacity. Regulation 93 of Table A shall not apply.

23. DIRECTORS MAY VOTE WHEN INTERESTED

A director who to their knowledge is in any way, whether directly or indirectly, interested in a contract or proposed contract with the company shall declare the nature of the interest at a meeting of the directors in accordance with the Act. Subject where applicable to such disclosure, a director shall be entitled to vote in respect of any contract or proposed contract in which the director is interested and, if the director does so, that director's vote shall be counted and the director shall be taken into account in ascertaining whether a quorum is present. Regulations 94 and 95 of Table A shall not apply.

24. OFFICIAL SEAL

The company may exercise all the powers conferred by the Act with regard to having any official seal and such powers shall be vested in the directors. Subject to the provisions of the Act, any instrument to which an official seal is affixed shall be signed by such persons, if any, as the directors may from time to time determine.

25. NOTICES

Any notice or other document may be served on or delivered to any member by the Company either personally, or by sending it by post addressed to the member at that member's registered address or by fax or telex to a number provided by the member for this purpose, or by leaving it at the member's registered address addressed to the member, or by any other means authorised in writing by the member concerned. In the case of joint holders of a share, service or delivery of any notice or other document on or to one of the joint holders shall for all purposes be deemed a sufficient service on or delivery to all the joint holders. Regulation 112 of Table A shall not apply.

26. TIME OF SERVICE

Any notice or other document, if sent by the Company by post, shall be deemed to have been served or delivered 48 hours after posting and, in proving such service or delivery, it shall be sufficient to prove that the notice or document was properly addressed, stamped and put in the post. Any notice or other document left by the company at a registered address otherwise than by post, or sent by fax or telex or other instantaneous means of transmission, shall be deemed to have been served or delivered when it was so left or sent. Regulation 115 of Table A shall not apply.

SCHEDULE 11: PARTY DETAILS

Full Party Name		
Registered number		
Registered address		
Applicable Party Category(ies)		
Corporate group (i.e. names of other Parties which are Affiliates of the Party)		
Date of accession		
Date of termination		
Market Domain I.D.	[applicable dates]	[I.D.]
(DNO/IDNO Parties and Supplier Parties only)	[applicable dates]	[I.D.]
Market Participant ID for MHHS	[applicable dates]	[I.D.]
(DNO/IDNO Parties and Supplier Parties only)	[applicable dates]	[I.D.]
DIP ID for MHHS	[applicable dates]	[I.D.]
(DNO/IDNO Parties and Supplier Parties only)	[applicable dates]	[I.D.]
Contract Manager		
UK address, phone number and email for notices		
Emergency SRN		
Current aggregate of Maximum Export/Import* Capacities (CVA Registrants only) *whichever is greater on a site-by-site basis		

SCHEDULE 12: NOT USED

SCHEDULE 13: BILATERAL CONNECTION AGREEMENT

DATED [.....]

[.....] (1)

And

[.....] (2)

BILATERAL CONNECTION AGREEMENT

FOR
A DISTRIBUTION CONNECTED SYSTEM
AT

[.....]

Reference: [.....]

CONTENTS

1. DEFINITIONS, INTERPRETATION AND CONSTRUCTION

2. COMMENCEMENT, DURATION AND CONNECTION

3. THE USER'S RIGHT TO BE AND TO REMAIN CONNECTED TO THE COMPANY'S DISTRIBUTION SYSTEM

4. THE CONNECTION POINTS, CONNECTION EQUIPMENT AND CONNECTION ASSETS

5. MAXIMUM CAPACITY

6. COMPLIANCE WITH SITE SPECIFIC CONDITIONS AND OPERATIONAL ARRANGEMENTS

7. TERM

8. VARIATIONS

9. GENERAL

SCHEDULE 1 - CONNECTION CHARACTERISTICS

SCHEDULE 2 - USE OF SYSTEM, METERING AND DATA PROVISION

SCHEDULE 3 - SITE SPECIFIC CONDITIONS

SCHEDULE 4 – GENERATION

SCHEDULE 5 - APPLICATION FOR MODIFICATION

SCHEDULE 6 – CURTAILABLE CONNECTIONS

1 [ ] a company registered in [ ] with number [ ] whose registered office is at [ ] (the "**Company**", which expression shall include its successors and/or permitted assigns); and

2 [ ] a company registered in [ ] with number [ ] whose registered office is at [ ] (the "**User**", which expression shall include its successors and/or permitted assigns).

WHEREAS

A The User has applied for Connection to and use of the Company's Distribution System and pursuant to the Company's Distribution Licence the Company is required to offer terms in this respect.

B The Company and the User are parties to the Distribution Connection and Use of System Agreement (the "**DCUSA**") as referred to in Condition 22 of their distribution licences granted, or treated as granted, under the Electricity Act 1989.

C This Bilateral Connection Agreement including its schedules (this "**BCA**") is entered into pursuant to the DCUSA and shall be read as being governed by it.

D For the purposes of this BCA, the Company is the person providing Connection and Use of Distribution System (and so is the Company for the purposes of the DCUSA) and the User is the person receiving Connection and Use of Distribution System (and so is the User for the purposes of the DCUSA).

NOW IT IS HEREBY AGREED as follows:

1. DEFINITIONS, INTERPRETATION AND CONSTRUCTION

1.1 Unless the subject matter or context otherwise requires or is inconsistent therewith, terms and expressions defined in the DCUSA have the same meanings in this BCA. Where terms and expressions have different meanings in respect of Sections 2A and 2B of the DCUSA, the meanings given in respect of Section 2B of the DCUSA shall apply.

1.2 The following terms and expressions shall have the meaning set out below:-

[Term]	[Meaning]
.....	.....
.....	.....

1.3 Unless the subject matter or context otherwise requires or is inconsistent therewith, the rules of interpretation applying in the DCUSA shall apply equally to this BCA, and accordingly clause 1.2 of the DCUSA shall apply to this BCA as if it was set out herein and referred to this BCA (rather than "the Agreement"). Where different rules of interpretation apply in respect of Sections 2A and 2B of the DCUSA, the rules of interpretation applying in respect of Section 2B of the DCUSA shall apply.

2. COMMENCEMENT, DURATION AND CONNECTION

2.1 This BCA shall take effect on the date hereof and shall continue in force until terminated in accordance with Clause 7.

2.2 The DCUSA and this BCA shall supersede any prior agreements or arrangements between the Company and the User in respect of Connection at the Connection Points specified herein.

3. THE USER'S RIGHT TO BE AND TO REMAIN CONNECTED TO THE COMPANY'S DISTRIBUTION SYSTEM

3.1 Subject to the terms and conditions of the DCUSA and this BCA, the User shall have the right for the User's System to be, and to remain, Connected to the Company's Distribution System at the Connection Points specified herein, and (subject to the DCUSA) the right to be and remain Energised.

3.2 The rights referred to in Clause 3.1 are conditional upon:

3.2.1 ['Completion'] of the relevant Connection Assets under and in accordance with any agreement for the construction or modification of the Connection Assets so that they may be Energised;

3.2.2 the Company having procured, or the User having procured or granted to the Company in respect of land under its control, the land rights and interests for the Connection Assets as specified in Schedule 3 (and those land rights and interests remaining in force) [or the User having provided an indemnity to the Company (on terms reasonably acceptable to the Company) in respect of the absence of such rights]; and

3.2.3 [ANY FURTHER SITE SPECIFIC CONDITIONS TO BE AGREED].

3.3 If the conditions set out in Clause 3.2 are not fulfilled at the date hereof each party shall use reasonable endeavours to procure the fulfilment of those conditions relating to it which have not already been fulfilled. If the conditions have not been fulfilled within three months of the date hereof, the Company shall have the right to terminate this BCA.

3.4 Once each of the conditions in Clause 3.2 has been fulfilled, each party shall use reasonable endeavours to keep such conditions relating to it fulfilled throughout the term of this BCA.

3.5 The User and the Company undertake to each other that they shall forthwith notify the other of any change of circumstances occurring hereafter as a result of which any of the above conditions ceases to apply and the User and the Company shall indemnify each other against all actions, proceedings, claims or demands brought or threatened against them by a third party as a result of any breach of the undertakings contained in Clause 3.

4. THE CONNECTION POINTS, CONNECTION EQUIPMENT AND CONNECTION ASSETS

4.1 The Connection Points, Connection Equipment and Connection Assets to which this BCA relates are more particularly described in Schedules 1 and 3.

5. MAXIMUM CAPACITY

5.1 The Maximum Import Capacity and the Maximum Export Capacity for this BCA are specified at Schedule 1.

6. COMPLIANCE WITH SITE SPECIFIC CONDITIONS AND OPERATIONAL ARRANGEMENTS

6.1 The site specific conditions and operational arrangements are specified in Schedule 3. As appropriate the Company and/or the User shall use reasonable endeavours to comply with them.

7. TERM

7.1 Subject to Clause 3.3, this BCA shall continue in full force and effect until:

7.1.1 terminated by the User giving the Company 3 months' notice in writing (or such lesser period as may be agreed between the parties);

7.1.2 terminated by the Company giving the User 3 months' notice in writing (or such lesser period as may be agreed between the parties) save that for so long as the Company is required to offer terms for Connection and Use of Distribution System to the User in respect of the Company's Distribution System pursuant to the Company's Distribution Licence, such termination shall only be effective if the User does not notify the Company within 14 days of the date of the Company's notice that the User requires replacement terms to be entered into pursuant to Condition 12 of the Company's Distribution Licence;

7.1.3 terminated in accordance with Clause 7.3; or

7.1.4 (subject to contrary agreement between the parties) Disconnection of the Connection Point.

7.2 For the purpose of this BCA it shall be an event of default if:

7.2.1 the User ceases to be a Party to the DCUSA;

7.2.2 the User breaches in any material respect any of its obligations under this BCA and (if it is capable of remedy) it is not remedied within 30 days of receiving written notice from the Company of the occurrence thereof; or

7.2.3 any of the conditions precedent set out in Clause 3.2 and relating to the User cease to be satisfied.

7.3 Upon an event of default pursuant to Clause 7.2, the Company (without prejudice to its other rights and remedies) shall have the following rights:

7.3.1 to terminate this BCA;

7.3.2 to an injunction or equitable relief, or to make restitution of amounts improperly received; and

7.3.3 to set off any amounts then due and owing by the User to the Company against amount payable by the Company to the User.

7.4 Upon termination of this BCA the User shall allow the Company at its sole option to Disconnect, and to enter the User's (and/or, in the case of an Offshore Transmission System, the Offshore Transmission Owner's) premises in order to Disconnect, the Connection Point and shall pay to the Company all sums then due and

payable or accrued due under this BCA and any costs incurred by the Company in Disconnecting the Connection Point and removing the Company's Connection Equipment and/or the User's Connection Equipment and re-instating the Company's premises or those of any Affiliate.

7.5 Termination of this BCA shall not affect any rights or obligations which may have accrued prior to termination or resulting from the event giving rise to the right to terminate and shall not affect any continuing obligations which survive termination.

7.6 Clauses 7.3, 7.4, 7.5, 7.6, 7.7 and 9 shall survive termination of this BCA.

7.7 Upon termination of this BCA for any reason whatsoever, the User shall pay to the Company the charges due or owing to the Company under the DCUSA and this BCA (or such other agreements as may be in place) together with any, costs, fees and expenses properly incurred by the Company as a result of such termination, and the User shall pay the same within 28 days of the date of an invoice submitted by the Company.

8. VARIATIONS

8.1 Subject to Clause 8.2, and 8.3 below, no variation to this BCA shall be effective unless made in writing and signed by or on behalf of both parties.

8.2 Either party shall at any time be entitled to propose variations to this BCA by notice in writing to the other party (including variations to the Maximum Import Capacity and the Maximum Export Capacity). The Company and the User shall negotiate in good faith the terms of any such variation, but if a variation to this BCA has not been agreed and put into effect within 20 Working Days after it has been proposed, either party shall be entitled to refer the matter to the Authority, pursuant to Section 23 of the Act, as if the variation were a new connection as referred to in that Section. The parties shall give effect to the determination of the Authority and shall enter into any agreement supplemental to this BCA as shall be necessary to give effect to any variation agreed or so determined.

8.3 The parties shall use reasonable endeavours to ensure the BCA is maintained (or varied) in line with the DCUSA and other Relevant Instruments.

9. GENERAL

9.1 For the purposes of this BCA and the provisions of the DCUSA referred to in Clause 9.2.1, the figure of "£1 million" referred to in that provision of the DCUSA shall [remain unchanged] / [be replaced with "£5 million"] [DELETE AS APPROPRIATE].

9.2 Subject to Clause 9.1, the provisions of the DCUSA under the following headings shall apply to this BCA as if they were set out herein and referred to this BCA (rather than "the Agreement"):

9.2.1 Limitation of Liability;

9.2.2 Force Majeure;

9.2.3 Disputes;

9.2.4 Notices;

9.2.5 Entire Agreement;

9.2.6 Severability;

9.2.7 Waivers;

9.2.8 Third Party Rights;

9.2.9 Assignment and Sub-contracting; and

9.2.10 Law and Jurisdiction.

IN WITNESS WHEREOF the hands of the duly authorised representatives of the parties hereto at the date first above written:

Signed for and on behalf of the User by)

Print name: .....) Signature: .....

Job title: .....)

Signed for and on behalf of the Company by)

Print name: .....) Signature:…….....

Job title: .....)

SCHEDULE 1 - CONNECTION CHARACTERISTICS

NAMING AND DEFINITION OF THE CONNECTION

Including commencement date and geographic plans where appropriate.

DECLARATION OF CAPACITY REQUIREMENTS

SCHEDULE 2 - USE OF SYSTEM, METERING AND DATA PROVISION

USE OF SYSTEM

Tariff for the Connection Point (by reference to the Relevant Charging Statement)

METERING

Including type of meter, functionality, registers if applicable. If no meter is required state that this is the case.

DATA PROVISION

Including unique references, data formats, frequency, type of LAF (generic/specific).

SCHEDULE 3 - SITE SPECIFIC CONDITIONS

OPERATIONAL ARRANGEMENTS AND DIAGRAMS

ASSET OWNERSHIP AND RESPONSIBILITY SCHEDULES

[In the case of Offshore Transmission Systems, the Electrical Plant and Electric Lines of the Offshore Transmission Owner should be identified as being Connection Equipment of the OTSO Party.]

TECHNICAL CONDITIONS AND DEROGATIONS

CONNECTION ASSETS

LAND RIGHTS

SCHEDULE 4 - GENERATION

GENERATION CONNECTED TO USER'S SYSTEM

EXCLUSION AND LIMITATIONS OF LIABILITY FOR GENERATION UNAVAILABILITY PAYMENT

SCHEDULE 5 - APPLICATION FOR MODIFICATION

SCHEDULE 6 – CURTAILABLE CONNECTIONS

DETAILS OF CURTAILABLE CONNECTIONS CONNECTED TO THE USER'S SYSTEM

DETAILS OF TECHNICAL REQUIREMENTS TO INSTRUCT CURTAILMENT TO USER

AGREED ALTERNATIVES TO CURTAILMENT

SCHEDULE 14: WEBSITE REQUIREMENTS

The following requirements apply in relation to the Website:

1 The Website is to comply with best practice regarding accessibility and the use of widely used or open formats.

2 The Website is to comprise public facing pages (the Public Pages) that are accessible by all, and pages (the Password Controlled Pages) that are only accessible by those with a user name and password (a Web Account).

3 The following shall be accessible through the Public Pages:

a. this Agreement (excluding, while it forms part of this Agreement, the Revenue Protection Code of Practice);

b. a list of the Parties;

c. a copy of the Change Register;

d. subject to Clauses 57.1 and 57.3.1, a copy of each: (i) Change Proposal made after 31 May 2014; (ii) consultation issued after 31 May 2014 in respect of a Change Proposal; and (iii) Change Report delivered to the Panel and/or the Authority after 31 May 2014;

e. subject to Clauses 57.1 and 57.3.1, all the matters, minutes, reports, consultation responses, data and other information related to the change control process set out in Section 1C produced by or for, or made available to, the Panel, the Secretariat, the Panel Secretary or a Working Group after 31 May 2014 (with the exception of contact details); and

f. subject to Clauses 57.1 and 57.3.1, all the minutes of (and papers associated with) the meetings of the Panel published after 31 May 2014.

3A Subject to Paragraph 6, the following shall only be accessible through the Password Controlled Pages:

a. while the Revenue Protection Code of Practice forms part of this Agreement, the full text of this Agreement (including the Revenue Protection Code of Practice);

b. minutes of (and papers associated with) the meetings of the Panel, Working Groups and the DCUSA Ltd board of directors that are not made accessible under Paragraph 3;

c. the contact details for Contract Managers and holders of Web Accounts;

d. the contact details for receipt of information under Clause 30.13 (under which Users are notified of significant off-supply incidents);

e. the theft contacts register provided by each Supplier Party under paragraph 6.7 of the Revenue Protection Code of Practice; and

f. a file in .csv format containing the collated information for rota Load Block Alpha Identifiers, in accordance with paragraph 13 of Schedule 8.

4 Subject to Paragraph 5, Web Accounts shall only be given to the Panel, a Party, the Panel Secretary, the Secretariat, the Authority, the Consumer Body, RECCo, the Independent System Operator and Planner, BSCCo, SECCo or DCUSA Ltd (or to the employees of any of them).

5 The Panel may, at its sole discretion, also give Web Accounts to persons (each an Interested Industry Participant) other than those referred to in Paragraph 4. A person wishing to become an Interested Industry Participant shall submit an application for a Web Account via the Website. Such application shall include the requirement to specify a sponsoring Party.

6 The access rights attributable to each Web Account may (as determined by the Panel) provide individual users (or classes of user) with different levels of access within the Password Controlled Pages, including so that (a) DCUSA Ltd's business confidential or financial information is only available to Parties; and (b) DCUSA Ltd's corporate governance information is only available to the directors of DCUSA Ltd.

7 The Panel may, at its sole discretion, withdraw or reduce the access rights associated with a Web Account at any time.

8 The Secretariat shall collate and publish on the Website (as part of the Password Controlled Pages) the emergency metering and follow-up points of contact provided and updated by each Supplier Party under Clause 30.5G.1. The Secretariat shall confirm the accuracy of these contact details with each Supplier Party during September of each year.

SCHEDULE 15: NOT USED

SCHEDULE 16: COMMON DISTRIBUTION CHARGING METHODOLOGY

Introduction

This Schedule 16, version 14.1, is to be used for the calculation of Use of System Charges which will become effective from, 01 April 2022 and remain effective until superseded by a revised version.

1 This Schedule 16 sets out the Common Distribution Charging Methodology (CDCM), which gives the methods, principles, and assumptions underpinning the calculation of Use of System Charges by each DNO Party (except where the DNO Party is acting as an LDNO).

1A. The CDCM is applicable to "Designated Properties", as defined in Standard Condition 13A (Common Distribution Charging Methodology) of the DNO Party's Distribution Licences.

2 This Schedule 16 comprises two main parts. Part 1 describes the cost allocation rules. Part 2 describes the tariff structures and their application.

3 In order to comply with this methodology statement when setting distribution Use of System Charges the DNO Party will populate and publish the following CDCM model versions:

a. for charges effective from 1 April 2020:

i. where the Authority has given no direction under Clause 19.1B, CDCM model version 3 as issued by the Panel in accordance with Clause 14.5.3; or
ii. where the Authority has given direction under Clause 19.1B that periods of notice described in Clause 19.1A need not apply, CDCM model version 3(332) as issued by the Panel in accordance with Clause 14.5.3;

b. for charges effective from 1 April 2021:

i. where the Authority has given no direction under Clause 19.1B, CDCM model version 6 as issued by the Panel in accordance with Clause 14.5.3; or
ii. where the Authority has given direction under Clause 19.1B that periods of notice described in Clause 19.1A need not apply, CDCM model version 6(379) as issued by the Panel in accordance with Clause 14.5.3; or

c. for charges effective from 1 April 2022 or later:

i. where the Authority has given no direction under Clause 19.1B, CDCM model version 7 as issued by the Panel in accordance with Clause 14.5.3; or
ii. where the Authority has given direction under Clause 19.1B that periods of notice described in Clause 19.1A need not apply, CDCM model version 8 as issued by the Panel in accordance with Clause 14.5.3.

4 The glossary at the end of this Schedule 16 contains definitions of terms and acronyms used in this Schedule 16. In the case of any conflict between the defined terms and acronyms set out in this Schedule 16 (on the one hand) and the definitions and rules of interpretation set out in Clause 1 of this Agreement (on the other), the defined terms and acronyms set out in this Schedule 16 shall prevail.

5 Algebraic formulae in this Schedule 16 use square brackets to clarify the calculations. For the avoidance of doubt, these square bracketed terms form an effective part of this Schedule 16.

PART 1 — COST ALLOCATION

Main steps in the allocation

6 Figure 1 gives a general overview of how the four main steps in the methodology relate to each other.

Figure 1 - Overview of the main steps in the methodology

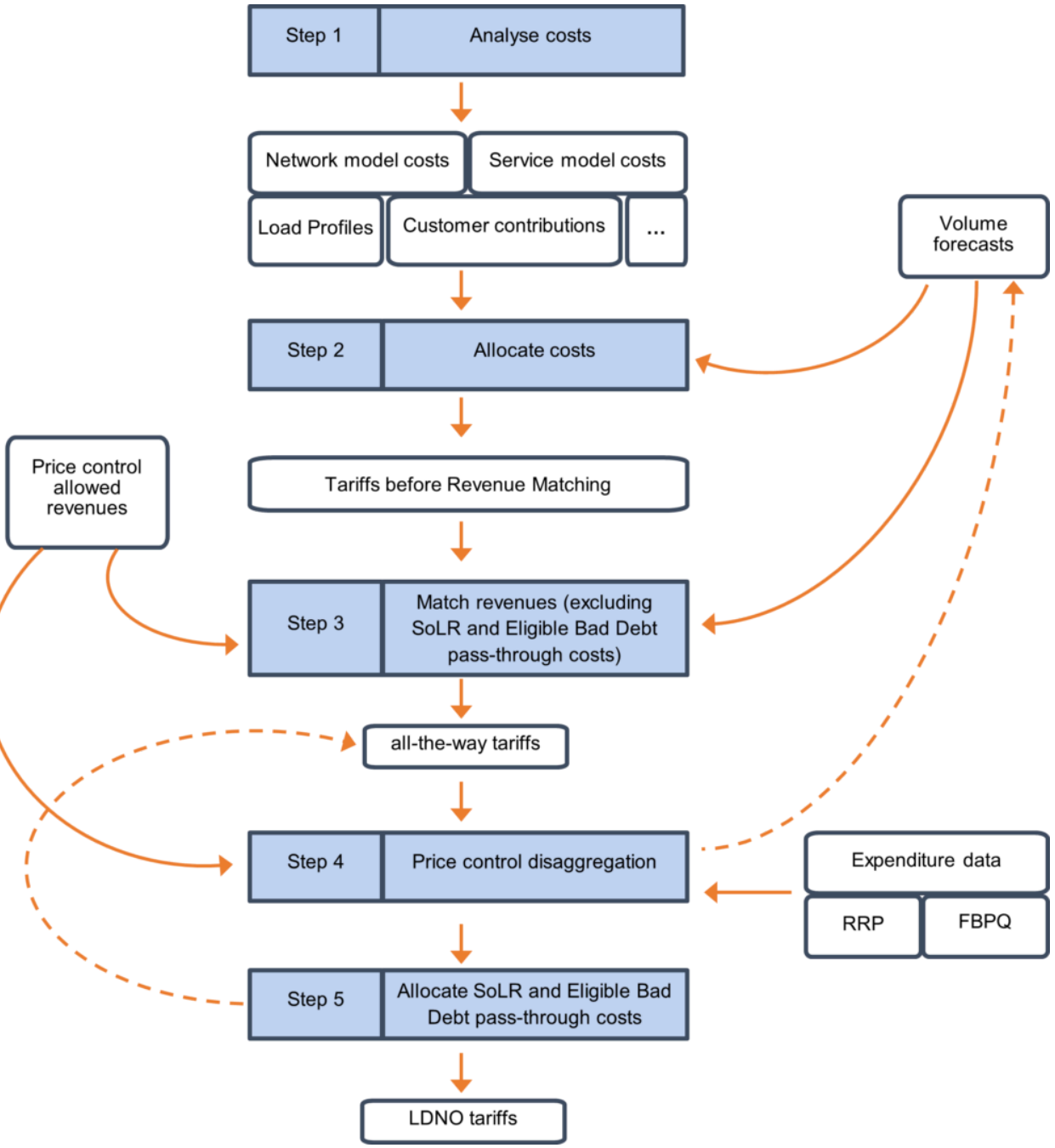

7 Step 1 involves the gathering of information about the network, the costs of assets and operations, the users of the network, and the forecast level of use and level of allowed revenue in the charging year.

8 Step 2 is the application of the cost allocation rules set out below. These rules are only for tariffs before revenue matching and do not apply to LDNO tariffs.

9 Step 3 involves adjustments to the tariff components calculated in step 2 in order to match revenue recovered from the CDCM to the amount of revenue allowed under the price control conditions, less any adjustment needed for the recovery of the pass-through costs referred to in paragraph 10A, which are allocated in Step 5 following the application of discount factors as detailed in Step 4.

10 Step 4 uses price control condition calculations, actual expenditure data and forecast expenditure data in order to determine discount percentages, which are then applied to all-the-way tariffs in order to produce

LDNO tariffs.

10A. Step 5 allocates pass-through of:

a. the DNO Party's Supplier of Last Resort costs to all post revenue matching domestic tariffs with a fixed charge, including those for LDNOs; and
b. the DNO Party's Eligible Bad Debt costs to all post revenue matching metered demand tariffs, including those for LDNOs.

11 Step 4 is independent from Steps 1 to 3. In practical terms, Step 4 must be performed first, as the discount percentages are used within Step 1 to combine volume forecasts for all-the-way and portfolio tariffs into a single composite dataset for each type of end user.

Overview of the tariff components

12 Each tariff comprises some or all of the tariff components listed in table 1.

Table 1: List of tariff components

Tariff component	Unit	
Three unit rates	p/kWh	
Fixed charge	p/day	
Capacity charge	p/kVA/day	
Exceeded capacity charge	p/kVA/day	Half hourly settled demand tariffs only.
Reactive power charge	p/kVArh	

13 For users that are acting as LDNOs, tariffs are portfolio tariffs with the same tariff components as the corresponding all-the-way end user tariff, excluding reactive power charges (but prices for some tariff components may be calculated as zero).

14 Each component of each tariff is rounded to the nearest value with no more than three decimal places in the case of unit rates expressed in p/kWh and reactive power unit charges expressed in p/kVArh, and with no more than two decimal places in the case of fixed and capacity charges (including exceeded capacity charges) expressed in p/MPAN/day and p/kVA/day respectively.

STEP 1: ANALYSE COSTS

15 The first step of the methodology involves the determination of costs or revenue allowances for various parts of the network, and the collection of information about the relevant characteristics of network users.

Network model asset values

16 The DNO Party specifies a network model, also known as a distribution reinforcement model (DRM) or a 500 MW model, in line with the requirements of this section.

17 The network model determines the £/kW/year figure (based on simultaneous maximum load at each network level) corresponding to amortisation and return on capital for assets at the LV circuits, HV/LV, HV, EHV/HV and EHV network levels, and, in England and Wales, at the 132kV/EHV, 132kV/HV and 132kV network levels.

18 Not Used.

19 The network model consists of a costed design for an increment to the DNO Party's network.

20 At each network level, the model is sized to provide secure capacity to meet demand that, aggregated up to individual grid supply point (GSP) level, amounts to 500 MW of simultaneous maximum demand.

21 The model's design assumes a power factor of 0.95 and no embedded generation.

22 The assets included in the network model are modern equivalent assets of the kind that the DNO Party would normally install on new networks.

23 The nature, quantity and size of assets in the model is such as to meet demand and security to the DNO Party's design and planning standards, allowing for the use of standard size equipment and typical utilisation factors.

24 The proportion of assets of different types at each network level, e.g. overhead and underground circuits, reflects the mix of users and the topography in the DNO Party's Distribution Services Area.

25 The cost assumed for each asset type reflect total purchase and installation cost in the charging year, using the DNO Party's normal procurement methods.

Diversity allowances

26 For each of the 132kV (except in Scotland), EHV and HV voltage levels, the DNO Party determines a diversity allowance between the transformation level above circuits at that voltage and the transformation level below circuits at that voltage.

27 Each diversity allowance represents the extent, expressed as a percentage, to which the sum of the maximum load across all substations below would exceed the corresponding sum for substations above.

28 The DNO Party also determines a diversity allowance between the GSP Group as a whole and the individual grid supply points.

Customer contributions under current connection charging policy

29 The DNO Party estimates the extent to which the assets at each network level used by each category of users would have been expected to be covered by customer contributions if they had been constructed under the charging year's connection charging policy.

30 The DNO Party groups users into categories, by network level of supply, for the purpose of making these estimates.

31 In the case of generators, the proportions relate to the notional assets whose construction or expansion might be avoided due to the generator's offsetting of demand on the network, and takes the same values as for a demand user at the same network level of supply.

Service model asset values

32 The DNO Party specifies a set of service models covering the range of typical dedicated assets operated for the benefit of individual HV and LV users of the network.

33 For each service model, the DNO Party estimates the number and types of connections that the model covers, and a total construction cost for the assets in the model.

34 For each tariff before revenue matching, the DNO Party identifies the extent to which each of the service models represents the relevant assets for an average user in that tariff.

35 A weighted average of service models is used if several service models apply to the same tariff.

36 In the case of unmetered supplies, service model assets are modelled on the basis of units delivered.

37 In the case of generation service models, the service models should reflect the additional costs of protection equipment for a typical generator in each category, for example the difference in cost between a fuse and a circuit breaker, or the cost of additional telecommunications equipment used for control purposes.

Transmission exit expenditure

38 The DNO Party prepares a forecast of expenditure on transmission exit charges in the charging year.

Other expenditure

39 The DNO Party prepares a forecast of other expenditure for the charging year, where other expenditure is defined as the sum of:

a. 100 per cent of direct operating costs.
b. 60 per cent of indirect costs (as defined in RRP guidance).
c. 100 per cent of network rates.

Distribution time bands

40 The DNO Party determines five distribution time bands, labelled black, red, yellow, amber and green. The 'red', 'amber' and 'green' time bands will apply to tariffs that are metered. The 'black', 'yellow' and 'green' time bands will apply to tariffs that are unmetered.

41 Distribution time bands are defined separately for Monday-Friday and for Saturday/Sunday. In each case, time bands are defined by reference to UK clock time only, and always begin and end on the hour or half hour. There will be no constraint on either the number of hours that can be covered by each time band or whether the time band applies to all or only part of a day. The red, amber and green times bands will apply throughout the year. The black and yellow time bands can be set to apply to only part of the year, where so specified by the DNO Party.

41A. The DNO Party may only change distribution time bands with effect from 1 April and must provide a minimum of 15 months prior notice of such changes. However, where a change to distribution time bands is caused by the implementation of a change to this methodology, the requirement to provide a minimum of 15 months' notice prior notice will not apply.

41B. Notice of changes to the distribution time bands should be given in the relevant charging statement, and such notice should appear in the same paragraph of the statement as the time bands that are being changed.

Load characteristics

42 The DNO Party estimates the following load characteristics for each category of demand users:

- A load factor, defined as the average load of a user group over the year, relative to the maximum load level of that user group. Load factors are numbers between 0 and 1; and
- A coincidence factor, defined as the expectation value of the load of a user group at the time of system simultaneous maximum load, relative to the maximum load level of that user group. Coincidence factors

are numbers between 0 and 1.

42A. The load characteristics for unmetered supplies for which Use of System Charges are billed on an aggregated basis are not determined from settlement data. For each such unmetered supplies tariff the load characteristics are calculated using profile data derived for each GSP Group.

43 In determining the load characteristics of each category of demand user the DNO Party will use reasonable endeavours to analyse meter and profiling data received for the most recent 3 year period (at the time of setting charges for the relevant charging year) for which data are available in time for use in the calculation of charges. Load factors and coincidence factors will be calculated individually for each of the 3 years and a simple arithmetic average will be calculated to be used in tariff setting.

44 For load factors and coincidence factors in the case of customer classes for which Use of System Charges are billed on an aggregated basis (except the unmetered supplies customer classes), data adjusted for GSP Group correction factor are used.

45 Not used.

46 Not used.

Loss adjustment factors to transmission

47 For each network level, the DNO Party determines a single loss adjustment factor to transmission relating to Exit Points from its network at that level. These loss adjustment factors should be representative of average losses at the time of system simultaneous maximum load.

Peaking probabilities

48 The DNO Party determines a peaking probability in respect of each network level and each of the distribution time bands.

49 The peaking probability represents the probability that an asset at that network level would experience maximum load during that distribution time band. In deriving peaking probabilities the DNO Party will use reasonable endeavours to use the most recent 3 year period (at the time of setting charges for the relevant charging year) for which information is available in time for use in the calculation of charges. Peaking probabilities will be derived individually for each of the 3 years and a simple arithmetic average will be calculated to be used in tariff setting.

Power factor data

50 The DNO Party determines or estimates, for each network level, the average of the ratio of reactive power flows (kVAr) to network capacity (kVA), weighted by reactive power flow.

51 If data are not available for any network level, the DNO Party uses data for the nearest network level at which they are available.

Volume forecasts

52 The DNO Party forecasts the volume chargeable to each tariff component under each tariff for the charging year. The DNO Party forecast should be separately analysed by both: tariffs before revenue matching, and all-the-way tariffs.

52A. For the purposes of the calculations described in Step 2 below, forecast volumes for the Domestic Aggregated (Related MPAN) and Non-Domestic Aggregated (Related MPAN) tariffs are added to the volumes for Domestic Aggregated or CT and Non-Domestic Aggregated or CT tariffs as follows:

a. Domestic Aggregated (Related MPAN) volumes are added to Domestic Aggregated or CT volumes;
b. LDNO LV: Domestic (Related MPAN) volumes are added to LDNO LV: Domestic Aggregated or CT volumes;
c. LDNO HV: LV Domestic (Related MPAN) volumes are added to LDNO HV: LV Domestic Aggregated or CT volumes;
d. Non-Domestic Aggregated (Related MPAN) volumes are added to Non-Domestic Aggregated or CT volumes.
e. LDNO LV: Non-Domestic (Related MPAN) volumes are added to LDNO LV: Non-Domestic Aggregated or CT volumes; and
f. LDNO HV: Non-Domestic (Related MPAN) volumes are added to LDNO HV: Non-Domestic Aggregated or CT volumes.

53 The volume forecasts for portfolio tariffs are multiplied by the LDNO discount percentages determined in Step 4, and combined with the all-the-way volume forecasts for each end user type. These combined volume forecasts are used throughout Steps 2 and 3 of the methodology.

53A. The DNO Party also forecasts the total customer count for tariffs for domestic customers connected to LDNO networks which are calculated in the EDCM.

53B. The DNO Party also forecasts the total customer count for tariffs for all demand tariffs for Designated Properties connected to LDNO networks which are calculated in the EDCM.

Forecast of price control allowed revenues

54 The DNO Party prepares a forecast of allowed revenue for the charging year in accordance with the requirements of the price control conditions and in a manner which is consistent with its volume forecasts and in a format consistent with Table 1 of Schedule 20.

STEP 2: ALLOCATE COSTS

Categories of costs

55 The cost and revenue allocation is driven by a representation of the different voltage and transformation levels in the network and by a distinction between the elements of cost related to assets and those related to operations.

56 Table 2 shows the network levels and categories of costs used in the model. In this Schedule 16, the acronym EHV refers to voltages of 22 kV and above, up to and excluding 132 kV. In the case of the Scottish Distribution Services Areas, the entries for the 132kV and 132kV/EHV network levels are zero as these voltages are part of the transmission network. LV refers to voltages below 1 kV, and HV refers to voltages of at least 1kV and less than 22kV.

Table 2: Categories of unit costs in the model

Category	Description	Unit	Levels
Network assets	Amortisation and return on capital for networks or substations at each level, excluding assets that are deemed to be covered by customer contributions. This is expressed per kW of system simultaneous maximum load.	£/kW/year	132kV 132kV/EHV EHV EHV/HV 132kV/HV HV HV/LV LV circuits
Transmission exit	Expressed per kW of system simultaneous maximum load	£/kW/year	Transmission exit
Other expenditure	Other expenditure is attributed to levels and assets in the network following the rules set out below. The part allocated to network levels is expressed per kW of system simultaneous maximum load.	£/kW/year	132kV 132kV/EHV EHV EHV/HV 132kV/HV HV HV/LV LV circuits
	The part of other expenditure allocated to assets dedicated to one customer is expressed per user for each user type.	£/year	For each type of user

Annuitisation of network model asset values

57 Capital costs that are not covered by customer contributions are converted to annual costs using a level annuity with the annuity period and rate of return set out in table 3.

Table 3: Annuity rate of return and annuity period

Parameter	Value
Annuity period	40
Annuity rate of return	Set to equal the latest pre-tax real weighted average cost of capital (CC below) for each DNO Party calculated using the following formula: CC = (Gearing Assumption x Pre-Tax Cost of Debt) + (1- Gearing Assumption)*(Post Tax Cost of Equity/(1-Corporation Tax Rate)) where: Gearing Assumption is set to the 'Notional gearing' value for the regulatory year for which tariffs are being set in the latest version of the PCFM (InputSummary sheet, Finance inputs, Vanilla allowed return on capital) prepared for the relevant DNO Party for publication with such tariff setting on the DNO Party's website; Pre-Tax Cost of Debt is set to the 'Allowed return on debt' value for the regulatory year for which tariffs are being set in the latest version of the PCFM (InputSummary sheet, Finance inputs, CAPM calculator tool: allowed return on debt) prepared for the relevant DNO Party for publication with such tariff setting on the DNO Party's website; Post Tax Cost of Equity is set to the 'Allowed return on equity' value for the regulatory year for which tariffs are being set in the latest version of the PCFM (InputSummary sheet, Finance inputs, CAPM calculator tool: allowed return on equity) prepared for the relevant DNO Party for publication with such tariff setting on the DNO Party's website; and Corporation Tax Rate is set to the 'Corporation tax rate' value for the regulatory year for which tariffs are being set in the latest version of the PCFM (InputSummary sheet, Tax, Tax policy) prepared for the relevant DNO Party for publication with such tariff setting on the DNO Party's website. In the event of any value not being available from the above data sources, the DNO Party will prepare a forecast of the value to be used in the CC formula instead. The CC value is calculated as a percentage, and rounded to two decimal places.

58 For each network level, the DNO Party determines the flow at time of system simultaneous maximum load, measured at Exit Points from the network level, that could be accommodated by the network model on the

basis of a normal mix and diversity of loads for its network.

59 The asset value and unit cost for that network level are obtained by dividing the annuitised cost of purchasing and installing the assets in the network model by this exit flow at time of system simultaneous maximum load.

[network level assets £/kW] = [assets £]/[modelled exit flow at time of system simultaneous maximum load kW]

[network level £/kW/year] = [network level assets £/kW]*[annuity factor]

60 The modelled exit flow at peak time is obtained by combining the 500 MW at GSP sizing assumption, the diversity allowance between GSP and GSP Group, and the loss adjustment factor for the relevant network level.

Allocation of other expenditure

61 Estimated load at each network level is calculated from:

- volume forecasts for each tariff before revenue matching;
- the loss adjustment factors representative of the time of system simultaneous maximum load;
- the load characteristics for users on each tariff before revenue matching, used to estimate the contribution of each user category to load at the time of system simultaneous maximum load.

62 For the purposes of this calculation, a generation user is taken to make a zero contribution to load at the network level corresponding to circuits at its Entry Point, and a full negative contribution to load at all network levels above its Entry Point. For demand users, account is taken of differences between the diversity allowance in the network model and the diversity of each customer group in order to ensure that the estimated load matches the volumes subject to charges in respect of each network level.

63 For each network level covered by the network model, a notional asset value is calculated by multiplying the unit asset cost by the estimated load:

[notional asset value £] = [network level assets £/kW]*[estimated load kW]

64 For each service model, a notional asset value is calculated by multiplying the unit asset value of that service model by the extent to which each user requires that model.

65 Other expenditure (excluding transmission exit charges) is allocated between network levels in the proportion given by these notional assets.

66 The result is combined with forecast transmission exit charges to give an annual expenditure figure for each network level and for each service model. These figures are converted into unit cost using the same rules as for costs and revenues from network assets and customer assets.

Allocation of costs on the basis of contribution to system simultaneous maximum load

67 All £/kW/year unit costs and revenue are used in the calculation of yardstick charges for each tariff before revenue matching

68 For demand tariffs before revenue matching and portfolio tariffs before revenue matching related to demand users, the contributions of each network level to the unit rate are calculated as follows:

[p/kWh from network model assets] = 100×[network level £/kW/year]×[user loss factor]/[network level loss factor]×[pseudo load coefficient]×(1 – [contribution proportion])/[days in charging year]/24

[p/kWh from operations] = 100×[transmission exit or other expenditure £/kW/year]×[user loss factor]/[network level loss factor]×[pseudo load coefficient]/[days in charging year]/24

69 These calculations are repeated for each network level.

70 In the paragraph 68 equation:

a. the user loss factor is the loss adjustment factor to transmission for the network level at which the user is supplied;

b. the network level loss factor is the loss adjustment factor to transmission for the network level for which costs are being attributed; and

c. the pseudo load coefficient is calculated as follows:

i. calculate the ratio of coincidence factor to load factor that would apply if units were uniformly spread within each time band, based on the estimated proportion of units that fall within each distribution time band and the assumption that the time of system simultaneous maximum load is certain to be in the red or black (as appropriate) distribution time band;

ii. calculate a correction factor for each user type as the ratio of the coincidence factor to load factor, divided by the result of the calculation above;

iii. for each network level and each unit rate, derive the ratio of coincidence factor (to network asset peak) to load factor that would apply given peaking probabilities at that network level if units were uniformly spread within each time band, multiplied by the correction factor; and

iv. the result of (iii) above is the pseudo load coefficient for the network level and unit rate.

71 For generation tariffs before revenue matching and portfolio tariffs before revenue matching, no contribution to the unit rate is calculated in respect of the network level corresponding to circuits at the Entry Point, and a negative contribution to the unit rate (i.e. a credit) comes from each network level above the Entry Point. That contribution is calculated as follows:

[p/kWh from network model assets] = –100×[network level £/kW/year]×[user loss factor]/[network level loss factor]×(1 – [contribution proportion])/[days in year]/24

[p/kWh from operations] = –100×[transmission exit or other expenditure £/kW/year]×[user loss factor]/[network level loss factor]/[days in year]/24

72 Not used.

Allocation of network costs to standing charges (fixed and capacity)

73 For demand users, other than unmetered users, standing charge factors are used to reduce unit charges and to attribute these costs or revenues to capacity charges (p/kVA/day) or fixed charges (p/day) instead.

74 The standing charge factors for demand tariffs before revenue matching are shown in the table below:

Tariff before revenue matching	EHV	EHV/HV	HV	HV/LV	LV circuits
Domestic Aggregated or CT					100%
Non-Domestic Aggregated or CT					100%
LV Site Specific			20%	100%	100%
LV Sub Site Specific			100%	100%	
HV Site Specific	20%	100%	100%		
Unmetered Supplies					0%

75 Where a standing charge factor is specified for the EHV/HV network level, the same standing charge factor applies to the 132kV/HV network level.

76 Where a standing charge factor is specified for the EHV network level, and where the 500 MW model includes 132kV/HV transformation, the 132kV standing charge factor is set to the EHV standing charge factor multiplied by the proportion of load going through 132kV/HV transformation.

77 For each tariff before revenue matching, the unit rates are reduced to take account of the allocation of costs to capacity or fixed charges. This is achieved by multiplying the cost element for each relevant network level by (1 – [standing charge factor]).

78 For each demand user type, and for each network level, the unit cost to be attributed to capacity charges or fixed charges in respect of that network level is:

[p/kVA/day from network model assets] = 100×[standing charge factor]×[network level £/kW/year]×[user loss factor]/[network level loss factor]×(1 – [contribution proportion])/[days in year]/(1 + [diversity allowance])×[power factor in network model]

[p/kVA/day from transmission exit or other expenditure] = 100×[standing charge factor]×[transmission exit or other expenditure £/kW/year]×[user loss factor]/[network level loss factor]/[days in year]/(1 + [diversity allowance])×[power factor in network model]

79 The power factor in network model parameter is set to 0.95.

80 The diversity allowance for the LV circuit level is defined as the amount by which the aggregate maximum demand load determined for that network level exceeds the estimated demand at the time of system simultaneous maximum load. The aggregate maximum demand is calculated by aggregating agreed import capacities for users for which Use of System Charges are billed on a site specific basis (excluding users with Domestic Aggregated or CT and Non-Domestic Aggregated or CT) and estimated capacities for users for which Use of System Charges are billed on an aggregated basis and those with Domestic Aggregated or CT and Non-Domestic Aggregated or CT for which Use of System Charges are billed on a site specific basis.

81 For the tariffs before revenue matching listed below, the unit costs calculated by the formula above are allocated to the capacity charge. The exceeded capacity charge for half hourly settled demand users, except unmetered users, is calculated using the same formula, but with the customer proportion set to zero.

- LV Site Specific
- LV Sub Site Specific
- HV Site Specific

82 Otherwise, the unit costs calculated by the formula above are allocated to the fixed charge.

83 For the tariffs before revenue matching listed below, LV costs are allocated to the fixed charge by estimating the proportion of LV network capacity used by these categories of users, and dividing the corresponding proportion of LV costs by the number of domestic and non-domestic MPANs:

- Domestic Aggregated or CT
- Non-Domestic Aggregated or CT.

84 Not used.

Costs associated with LV customer and HV customer levels

85 Other expenditure allocated to the LV customer and HV customer network levels are included in the fixed charge for each tariff before revenue matching where there is such a tariff component.

86 In the case of unmetered supplies, these charges are spread across all units.

Costs associated with reactive power flows

87 For each tariff before revenue matching and each network level, the contribution to reactive power unit charges is obtained as follows:

a. Calculate what the contribution to a single unrestricted unit rate in p/kWh from each network level would be.
b. Take the absolute value.
c. Adjust for standing charge factors at the relevant network levels (for demand users only).
d. Multiply by the assumed power factor in the network model.
e. Multiply by the DNO Party's estimate of the average ratio of the reactive power flow (kVAr) to network load (kVA) at the relevant network level.

88 For the purpose of the calculation of reactive power unit charges, generation users are taken to make a full contribution to the reactive power flows in the network at their Entry Point and at each network level above their Entry Point.

STEP 3: MATCH REVENUES

89 The DNO Party uses its volume forecasts to estimate the revenues that would be raised by applying the tariff before revenue matching components derived from step 2, excluding any revenues treated as excluded revenue under the price control conditions.

90 If any separate charging methodology is used alongside the CDCM, e.g. for EHV users, then the forecast revenues from these charges, excluding any revenues treated as excluded revenue under the price control conditions, are added to the total.

90A. The DNO Party calculates an adjusted forecast of allowed revenues, which excludes any Eligible Bad Debt and Supplier of Last Resort pass-through costs. Such pass-through costs are taken into account in Step 5 after LDNO discounts have been applied in Step 4.

91 If the adjusted forecast of allowed revenue exceeds the estimate of relevant revenues, then the difference is a residual shortfall. If the estimate of relevant revenues exceeds the adjusted forecast of allowed revenue, then the difference is a residual surplus.

92 Revenue matching is achieved by:

a. apportioning the total value of the residual surplus or residual shortfall to be returned or recovered respectively, via a fixed charge to (i) the domestic LV-connected charging band and (ii) the specific charging bands set out in paragraph 2.4 of Schedule 32 on the basis of (A) the aggregated consumption of all Final Demand Sites in that band (including the consumption of any Related MPANs where applicable), relative to (B) the combined total net consumption for all Final Demand Sites (including the consumption of any Related MPANs where applicable) plus the total consumption for unmetered customers.
b. The allocated proportion of the residual value to each charging band will then be divided equally among all Final Demand Sites within that charging band, resulting in the same level of residual fixed charge.
c. Residual charges for each Final Demand Site will be applied as a fixed charge adder (p/Final Demand Site/day) calculated as follows: the revenue surplus or shortfall (in pence) to be recovered for the band that the Final Demand Site is in; divided by the total number of Final Demand Sites in that band; divided by days in the charging year.

92A. In order to calculate all-the-way tariffs, residual charges are added to the tariffs before revenue matching as shown in the table below.

Tariff before revenue matching	**All-the-way Tariff**	**Residual Charge**
Domestic Aggregated or CT	Domestic Aggregated or CT with Residual	Domestic LV-connected Charging Band
Domestic Aggregated (Related MPAN)	Domestic Aggregated (Related MPAN)	None
Non-Domestic Aggregated or CT	Non-Domestic Aggregated or CT No Residual	None
	Non-Domestic Aggregated or CT Band 1	Non-domestic LV connected without a MIC as a basis for its current charge (Charging Band 1)
	Non-Domestic Aggregated or CT Band 2	Non-domestic LV connected without a MIC as a basis for its current charge (Charging Band 2)
	Non-Domestic Aggregated or CT Band 3	Non-domestic LV connected without a MIC as a basis for its current charge (Charging Band 3)
	Non-Domestic Aggregated or CT Band 4	Non-domestic LV connected without a MIC as a basis for its current charge (Charging Band 4)
Non-Domestic Aggregated (Related MPAN)	Non-Domestic Aggregated (Related MPAN)	None
LV Site Specific	LV Site Specific No Residual	None
	LV Site Specific Band 1	Non-domestic LV connected with a MIC as a basis for its current charge (Charging Band 1)
	LV Site Specific Band 2	Non-domestic LV connected with a MIC as a basis for its current charge (Charging Band 2)
	LV Site Specific Band 3	Non-domestic LV connected with a MIC as a basis for its current charge (Charging Band 3)
	LV Site Specific Band 4	Non-domestic LV connected with a MIC as a basis for its current charge (Charging Band 4)
LV Sub Site Specific	LV Sub Site Specific No Residual	None
	LV Sub Site Specific Band 1	Non-domestic LV connected with a MIC as a basis for its current charge (Charging Band 1)
	LV Sub Site Specific Band 2	Non-domestic LV connected with a MIC as a basis for its current charge (Charging Band 2)
	LV Sub Site Specific Band 3	Non-domestic LV connected with a MIC as a basis for its current charge (Charging Band 3)
	LV Sub Site Specific Band 4	Non-domestic LV connected with a MIC as a basis for its current charge (Charging Band 4)

HV Site Specific	HV Site Specific No Residual	None
	HV Site Specific Band 1	Non-domestic HV connected with a MIC as a basis for its current charge (Charging Band 1)
	HV Site Specific Band 2	Non-domestic HV connected with a MIC as a basis for its current charge (Charging Band 2)
	HV Site Specific Band 3	Non-domestic HV connected with a MIC as a basis for its current charge (Charging Band 3)
	HV Site Specific Band 4	Non-domestic HV connected with a MIC as a basis for its current charge (Charging Band 4)
Unmetered Supplies	Unmetered Supplies	Unmetered Supplies

Note 1: In all cases, the charges are added together by adding each individual component of the tariffs individually, whether it is a fixed or unit residual charge component.

Note 2: Where a charge is listed as ‘None’, or a value has not been set for a charge, the residual charge to be added in the case of that tariff component is zero.

92B. For any DNO Party, if the count of Final Demand Sites in any given metered non-domestic charging band is less than two in the charging year for which tariffs are being determined, the residual fixed charge for that band will be calculated as set out in accordance with Paragraph 92, but the total import consumption and total count of Final Demand Sites in that band will be combined with the equivalent information for the band above that band and at the same voltage level. If the band in question is the highest band, then it will be combined with the equivalent information for the band below that band and at the same voltage level. The residual fixed charge should therefore be the same for all the Final Demand Sites in the bands combined under this Paragraph 92B. There must be no single or combined band with less than two Final Demand Sites within that band. A Final Demand Site connected during the year will be counted as a fraction based on the proportion of the year for which the site was connected.

92C. There are eight possible combinations for grouping of non-domestic charging bands under Paragraph 92B. The grouping of bands under Paragraph 92B shall be applied in accordance with the preference order given in the table below.

Preference order for band grouping combinations	**Band 1**	**Band 2**	**Band 3**	**Band 4**
First	1	2	3	4
Second	1 + 2		3	4
Third	1	2 + 3		4
Fourth	1	2	3 + 4	
Fifth	1 + 2		3 + 4	
Sixth	1 + 2 + 3			4
Seventh	1	2 + 3 + 4		
Eighth	1 + 2 + 3 + 4			

92D. Revenue matching for unmetered customers is achieved by apportioning the total value of the residual surplus or residual shortfall to be returned or recovered respectively, on the basis of total consumption for unmetered customers, relative to the combined total net consumption for all Final Demand Sites (including the consumption of any Related MPANs where applicable) plus the total consumption for unmetered customers. The residual value for unmetered customers is then recovered by applying a unit charge adder (p/kWh) calculated as follows: the residual surplus or shortfall (in pence) to be recovered; divided by the total volume of all unmetered customers (in kWh).

93 The unit charges adder is positive if there is a shortfall and negative if there is a surplus.

94 Where a residual surplus exists, and it is not possible to apply the charge from any charging band, as it reduces the fixed components of the relevant all-the-way tariff to less than zero (post allocation of pass-through costs in step 5), then the total fixed charge element of that all-the-way tariff will be capped at zero. The remaining residual surplus will be returned to all Final Demand Sites within that charging band by applying a fixed charge adder (p/kWh) across all unit rates. If this procedure would result in negative value for any tariff component, then that tariff component is set to zero, and the unit charge adder figure is modified to the extent necessary to match forecast and target revenue.

94A. Where Paragraph 94 applies and the basis for that all-the-way tariff is derived from more than one tariff before revenue matching and shares the same residual charge as described in Paragraph 92A, then the amount of residual charge to be applied will be set equal to the amount that applies to whichever tariff before revenue matching would first require a cap to be applied in accordance with Paragraph 94 (i.e. the lesser of the two). Where applicable, this applies to the fixed charge element of the relevant all-the-way tariff and the fixed charge adder on unit rates of the relevant all-the-way tariff.

95 Tariffs for generation do not have any revenue matching element.

STEP 4: PRICE CONTROL DISAGGREGATION

96 Step 4 involves calculations based on price control and expenditure data which produce a series of discount percentages to be used to determine portfolio tariffs for LDNOs.

97 The discount percentages are determined in accordance with Schedule 29, which schedule is deemed to form part of this CDCM (as if it were set out herein).

98 For demand users, the discount percentages are applied to all tariff components in all-the-way tariffs in order to determine embedded network portfolio tariffs.

99 For generation users, the unit rate element (p/kWh) is not discounted, reflecting the modelling assumption that generation benefits are seen at the voltage level above the Exit Point, and therefore the embedded LDNO simply “passes on” the benefits seen at the DNO Party level. The fixed charge element (p/day) is discounted at 100 per cent, as this tariff component in the all-the-way tariff recovers costs associated with the allocation of other expenditure to service assets, which are not provided by the DNO Party.

STEP 5: ALLOCATION OF PASS-THROUGH COSTS

100 Step 5 involves calculations based on the level of Supplier of Last Resort pass-through costs to be recovered in the charging year. Such costs are allocated to all domestic tariffs with a fixed charge (including LDNO tariffs) on an equivalent basis (i.e. without discounting LDNO tariffs). Step 5 also involves calculations based on the level of Eligible Bad Debt pass-through costs to be recovered in the charging year. Such costs are allocated to all demand tariffs (including LDNO tariffs) on an equivalent basis (i.e. without discounting LDNO tariffs).

101 Supplier of Last Resort pass-through costs are allocated by applying a fixed charge adder (p/day) to the tariffs for following customer groups (as further described in paragraph 102):

- Domestic Aggregated or CT;
- LDNO LV: Domestic Aggregated or CT;
- LDNO HV: Domestic Aggregated or CT;
- LDNO HVplus: Domestic Aggregated or CT (which is calculated in the EDCM);

- LDNO EHV: Domestic Aggregated or CT (which is calculated in the EDCM);
- LDNO 132kV/EHV: Domestic Aggregated or CT (which is calculated in the EDCM);
- LDNO 132kV: Domestic Aggregated or CT (which is calculated in the EDCM);
- LDNO 0000: Domestic Aggregated or CT (which is calculated in the EDCM).

102 The fixed charge adder is calculated as the costs to be passed through (in £) multiplied by 100 divided by the combined customer count of the groups listed in paragraph 101 (including those with tariff calculated in the EDCM, as determined in paragraph 53A) divided by the number of days in the charging year.

103 Eligible Bad Debt pass-through costs are allocated by applying a fixed charge adder (p/day) to all metered demand tariffs excluding 'related MPAN' tariffs. The fixed charge adder is calculated as the costs to be passed through (in £) multiplied by 100 divided by the combined customer count of all metered demand customer groups (including those with tariffs calculated in the EDCM, as determined in paragraph 53B) excluding 'related MPAN' customer groups divided by the number of days in the charging year.

104 The DNO Party will publish details of the fixed charge adders calculated under this Step 5 in its Use of System Charging Statement (as defined in and required by Standard Condition 14 of the DNO Party's Distribution Licence).

105 Not used.

106 Not used.

107 Not used.

108 Not used.

109 Not used.

110 Not used.

111 Not used.

112 Not used.

113 Not used.

114 Not used.

115 Not used.

116 Not used.

117 Not used.

118 Not used.

119 Not used.

120 Not used.

121 Not used.

122 Not used.

123 Not used.

124 Not used.

125 Not used.

PART 2 — TARIFF STRUCTURES AND APPLICATION

126 The CDCM provides for a common tariff structure for all 14 DNO Parties and their Distribution Service Areas.

127 This part details the common tariff structure for tariffs before revenue matching and associated tariff elements for demand and generation, for unmetered supplies and for charges to LDNOs.

127A. Tariffs before revenue matching are used to calculate the all-the-way tariffs as described in Paragraph 92A.

Tariff structures for demand customers

Aggregated Metered Demand

128 For MPANs that are to be charged on an aggregated basis (as further described in Paragraph 132C), Use of System Charges will be via the Supercustomer approach which for non-MHHS MPANs uses data from the D0030 industry data flow and is based on Settlement Classes comprising:

a. Line Loss Factor Class (LLFC);

b. Profile Class (PC);

c. Standard Settlement Configuration (SSC); and

d. Time Pattern Regime (TPR),
and which for MHHS MPANs uses data from the REP-002B industry data flow based on DUoS Tariff ID.

129 For non-MHHS NHH settled MPANs, the combination of LLFC/PC/SSC/TPR determines the associated profile and half-hourly data values. For HH and MHHS metered MPANs, the half-hourly data is used.

130 DNO specific network time bands will be applied to the appropriate SSC/TPR combinations or half-hourly data associated with each DUoS Tariff ID stated in Paragraph 129.

131 Charges will be applied on a fixed charge and unit rate basis. The latter allocated to DNO specific network time bands. There will be no capacity, exceeded capacity or reactive charges for aggregated metered demand MPANs.

132 Structure of aggregated metered demand charges will be as follows (where, if MPAN counts are provided for each settlement period, the fixed charge will be applied to the MPAN count in the final settlement period of the day):

a. Fixed charge will be p/MPAN/day; and

b. Unit charges will be p/kWh.

132A. Domestic Aggregated (Related MPAN) and Non-Domestic Aggregated (Related MPAN) and unmetered supplies will be charged on a p/kWh basis only.

132B. As described in Paragraph 40, there will be three unit rate time bands on a time-of-day basis for all aggregated customers with the exception of the unmetered supplies tariff, to reflect the requirements of the

cost drivers of their individual networks. These three time bands will be called ‘red’, ‘amber’ and ‘green’ to represent three differing cost signals.

132C. Those MHHS customers whose Connection Type is “Whole Current” will be charged on an aggregated basis and will be assigned to the appropriate tariff before revenue matching based on the Domestic Premises Indicator.

Those non-MHHS customers in Measurement Class A, F or G will be charged on an aggregated basis. Such customers will be assigned to the appropriate tariff before revenue matching based on the Measurement Class, type of metering equipment installed, and the voltage of connection as specified in the table below:

Tariff before revenue matching	Voltage of Connection	Settlement Type (HH or NHH)	Metering	Measurement Class
Domestic Aggregated or CT	LV	NHH	Whole Current or Current Transformer	A
Domestic Aggregated or CT	LV	HH	Whole Current or Current Transformer	F
Domestic Aggregated (Related MPAN)	LV	NHH	Whole Current or Current Transformer	A
Domestic Aggregated (Related MPAN)	LV	HH	Whole Current or Current Transformer	F
Non-Domestic Aggregated or CT	LV	NHH	Whole Current or Current Transformer	A
Non-Domestic Aggregated or CT	LV	HH	Whole Current	G
Non-Domestic Aggregated (Related MPAN)	LV	NHH	Whole Current or Current Transformer	A
Non-Domestic Aggregated (Related MPAN)	LV	HH	Whole Current	G

132D. For non-MHHS Metering Points, where the Supplier transfers customers from NHH Settlement to HH Settlement the following Measurement Classes will apply:

- Domestic users connected at LV with non-CT metering installed will transfer from Measurement Class A to Measurement Class F.
- Domestic users connected to LV with CT metering can (at supplier option in discussion with user) move to Measurement Class C (must be more than 100kW), Measurement Class E (must be 100kW or less) or Measurement Class F (must be 100kW or less).
- Non-Domestic users connected at LV with non-CT metering installed will transfer from Measurement Class A to Measurement Class G.
- Non-Domestic users connected at LV with CT metering installed will transfer from Measurement Class A to Measurement Class C (more than 100kW) or Measurement Class E (100kW or less).

Site-Specific Metered Demand

133 For HH metered demand not subject to aggregated charging, Use of System Charges will be settled on a site-specific basis using data from the D0275 or D0036 or for MHHS customers the IF-021 or IF-013 or IF-014 industry data flows based on half hourly metered data provided for the MPAN.

134 With the exception of Domestic Aggregated or CT and Non-Domestic Aggregated or CT, which will consist of a fixed and unit charge, Charges will consist of a fixed, unit, capacity and reactive power charge.

135 As described in Paragraph 40, there will be three unit rate time bands on a time of day basis for all half hourly settled customers with the exception of the half hourly unmetered supplies tariff, to reflect the

requirements of the cost drivers of their individual networks. These three time bands will be called ‘red’, ‘amber’ and ‘green’ to represent three differing cost signals.

135A. Those users in Measurement Class C or E and MHHS customers whose Connection Type is not “Whole Current” will be HH settled on a site-specific basis, and assigned to the appropriate tariff before revenue matching based on the type of metering equipment installed and the voltage of connection as specified in the table below:

Tariff before revenue matching	Voltage of Connection	Metering
Domestic Aggregated or CT	LV	Current Transformer (Below 70 kVA)*
Non-Domestic Aggregated or CT	LV	Current Transformer (Below 70 kVA)*
LV Site Specific	LV	Current Transformer
LV Sub Site Specific	LV Sub	Current Transformer
HV Site Specific	HV	Current Transformer

* only available during transitional arrangements catered for part 4 of this schedule.

136 There will be no charges applied to correctly de-energised HH MPANs/sites as determined by the de-energisation status in MPAS.

137 Structure of the HH demand charges:

a. Fixed charge p/MPAN/day;
b. Unit rate charge p/kWh;
c. Capacity charge p/kVA/day (as applicable per paragraph 134);
d. Exceeded capacity charge p/kVA/day (as applicable per paragraph 134); and
e. Reactive power charge p/kVArh (as applicable per paragraph 134).

138 Generally the p/MPAN/day charge relates to one MPAN. However, where a site is a group of MPANs as identified in the connection agreement, billing systems should be able to group the MPANs where appropriate for charging purposes.

139 Unit charges will be allocated by settlements HH data and DNO Party specific network time bands.

140 Where a site is incorrectly de-energised, i.e. when actual metering advances are received the DNO Parties should contact suppliers to ensure the status is corrected. If a site is found to be energised charges will be back dated to the date of energisation.

Unmetered Supplies

140A. Use of System Charges for aggregated settled unmetered demand MPANs (Measurement Class B) will be via the Supercustomer approach. As described in Paragraph 40, there will be three unit rate time bands for the Unmetered Supplies tariff, to reflect the requirements of the cost drivers of their individual networks. The three time bands will be called ‘black’, ‘yellow’ and ‘green’ to represent three differing cost signals.

140B. Use of System Charges for unmetered supplies which are pseudo HH metered (Measurement Class D) will use data from the D0275 or D0036, or for MHHS customers the IF-021 or IF-013 or IF-014 industry data flows based on half hourly data provided for the MPAN.

140C. Charges will consist of unit rates only.

Tariff	Voltage of Connection
Unmetered Supplies	LV

Demand Tariff Structures

141 Table 4 below shows the structure for aggregated metered demand tariffs before revenue matching, and Table 5 below shows the structure for site-specific demand tariffs.

Table 4: Aggregated Tariffs before revenue matching

Tariff before revenue matching	Unit 1 (p/kWh)	Unit 2 (p/kWh)	Unit 3 (p/kWh)	Fixed charge p/MPAN/day
Domestic Aggregated or CT	Red	Amber	Green	□
Domestic Aggregated (Related MPAN)	Red	Amber	Green	
Non-Domestic Aggregated or CT	Red	Amber	Green	□
Non-Domestic Aggregated (Related MPAN)	Red	Amber	Green	
Unmetered Supplies	Black	Yellow	Green	

Table 5: Site Specific Tariffs before revenue matching

Tariff before revenue matching	Unit rate 1 p/kWh	Unit rate 2 p/kWh	Unit rate 3 p/kWh	Fixed charge p/MPAN/day	Capacity charge p/kVA /day	Exceeded Capacity charge p/kVA/day	Reactive power charge p/kVArh
Domestic Aggregated or CT	Red	Amber	Green	□			
Non-Domestic Aggregated or CT	Red	Amber	Green	□			
LV Site Specific	Red	Amber	Green	□	□	□	□
LV Sub Site Specific	Red	Amber	Green	□	□	□	□
HV Site Specific	Red	Amber	Green	□	□	□	□
Unmetered Supplies	Black	Yellow	Green				

Note 1: The Domestic Aggregated (Related MPAN) and Non-Domestic Aggregated (Related MPAN) tariffs are supplementary to a standard published tariff and therefore only available under these conditions. These will be charged the same red, amber and green unit rates but will have a zero fixed charge.

Note 2: Where DNO Parties use a default tariff for invalid settlement combinations these will be charged at the Domestic Aggregated or CT rates.

Note 3: LV Sub applies to customers connected to the DNO Party's network at a voltage of less than 1 kV at a substation with a primary voltage (the highest operating voltage present at the substation) of at least 1 kV and less than 22 kV, where the current transformer (CT) used for the customer's settlement metering is located at the substation. For these purposes, 'at the substation' means:

a. an HV/LV substation with the metering CT in the same chamber as the substation transformer; or
b. an HV/LV substation with the metering CT in a chamber immediately adjacent to the substation transformer chamber.

Note 4: not used.

Note 5: Where a customer or its supplier requests a DNO Party to confirm if a connection may be eligible for an LV Sub tariff, the DNO Party will investigate and reach a decision, taking account of any supporting information provided by the customer or supplier and any additional information that is available to it. Administration charges (to cover reasonable costs) may apply if a technical assessment or site visit is

required, but shall not be applied where the DNO Party agrees to the change of tariff request. In all circumstances where a DNO Party decides or agrees that a customer should be moved to an LV Sub tariff, the new tariff charges will be applied in the next calendar month following the DNO Party's decision or agreement. Where a customer is already registered on an LV Sub tariff they will remain so.

Note 6: not used.

Note 7: Fixed charges are generally levied on a pence per MPAN basis. However, there are some instances where more than one MPAN exists on a customer's connection and only one fixed charge is appropriate. Where a group of MPANs is classed as a site as identified in the connection agreement, billing systems should be able to group the MPANs, where appropriate, for charging purposes.

Tariff structures for generation

NHH and Aggregated HH Metered Generation

142 NHH metered generation in measurement class A and HH metered generation in Measurement Classes F and G or MHHS customers whose Connection Type is "Whole Current" will be charged on an aggregated basis. Use of System Charges for LV generation aggregated tariffs will be billed via Supercustomer. The billing systems will be required to apply fixed charges plus negative unit charges with the process being managed through the DNO Party's invoicing of the supplier.

143 Structure of aggregated generation charges (where, if MPAN counts are provided for each settlement period, the fixed charge will be applied to the MPAN count in the final settlement period of the day):

a. Fixed charge will be p/MPAN/day;

b. Unit rate charge p/kWh; and

c. Reactive Charges will not apply.

Site Specific HH Generation

144 Use of System Charges for HH Site Specific generation tariffs (which excludes Measurement Class F and G or MHHS customers whose Connection Type is not "Whole Current") will be via the HH billing systems. The billing systems will be required to apply fixed charges plus reactive power unit charges, negative unit charges and manage the process through the DNO Party's invoicing of the supplier

145 Structure of Site Specific HH generation charges:

a. Fixed charge will be p/MPAN/day;
b. Unit rate charge p/kWh; and
c. Reactive power charge p/kVArh.

146 The following tables and notes show the structure for generation tariffs.

Table 6: Generation Aggregated Tariffs

Tariff Name	Unit rate 1 (p/kWh)	Unit rate 2 (p/kWh)	Unit rate 3 (p/kWh)	Fixed charge p/MPAN/day
LV Generation Aggregated	Red	Amber	Green	□
LV Sub Generation Aggregated	Red	Amber	Green	□

Table 7: Generation Site-Specific Tariffs

Tariff	Unit rate 1 p/kWh	Unit rate 2 p/kWh	Unit rate 3 p/kWh	Fixed charge p/MPAN/day	Reactive power charge p/kVArh
LV Generation Site Specific	Red	Amber	Green	□	□
LV Sub Generation Site Specific	Red	Amber	Green	□	□
HV Generation Site Specific	Red	Amber	Green	□	□
LV Generation Site Specific no RP charge	Red	Amber	Green	□	
LV Sub Generation Site Specific no RP charge	Red	Amber	Green	□	
HV Generation Site Specific no RP charge	Red	Amber	Green	□	

Note 1: not used.

Note 2: not used.

Note 3: not used.

Note 4: LV Sub Generation applies to customers connected to the DNO Party's network at a voltage of less than 1 kV at a substation with a primary voltage (the highest operating voltage present at the substation) of at least 1 kV and less than 22 kV, where the current transformer used for the customer's settlement metering is located at the substation.

Note 5: not used.

Note 6: Note 4 above for LV generation substation tariffs will be applied for new customers from 1 April 2010.

Note 7: Where a DNO Party has requested (and still requires) a generator to operate with a power factor of less than 0.95, excess reactive power charges will not apply (these instances are identified in the table as 'no RP charge').

Tariff structures for LDNOs

147 The tariff structure for LDNOs will mirror the structure of the all-the-way-tariff, and is dependent on the voltage of the Point of Connection being either LV (see Table 8) or HV (see Table 9); except for the LDNO unmetered tariffs (marked with ** in Tables 8 and 9 below), which are charged by reference to the voltage of the Points of Connection that provide the majority of the energised domestic connections for the LDNO in the GSP Group (or, where there is no such majority, on such other reasonable basis as the DNO Party determines). In all cases, the same tariff elements will apply.

Table 8: LDNO LV connection*

Tariff Name	Unit rate 1 p/kWh	Unit rate 2 p/kWh	Unit rate 3 p/kWh	Fixed charge p/MPAN/day	Capacity charge p/kVA/day	Exceeded Capacity charge p/kVA/day	Reactive power charge p/kVArh
LV Domestic Aggregated or CT	Red	Amber	Green	□			
Domestic Aggregated (Related MPAN)	Red	Amber	Green				
Non-Domestic Aggregated or CT (No Residual)	Red	Amber	Green	□			
Non-Domestic Aggregated or CT Band 1	Red	Amber	Green	□			

Non-Domestic Aggregated or CT Band 2	Red	Amber	Green	□			
Non-Domestic Aggregated or CT Band 3	Red	Amber	Green	□			
Non-Domestic Aggregated or CT Band 4	Red	Amber	Green	□			
Non-Domestic Aggregated (Related MPAN)	Red	Amber	Green				
LV Site Specific (No Residual)	Red	Amber	Green	□	□	□	□
LV Site Specific Band 1	Red	Amber	Green	□	□	□	□
LV Site Specific Band 2	Red	Amber	Green	□	□	□	□
LV Site Specific Band 3	Red	Amber	Green	□	□	□	□
LV Site Specific Band 4	Red	Amber	Green	□	□	□	□
Unmetered Supplies	Black	Yellow	Green				
LV Generation Aggregated	□			□			
LV Generation Site Specific	□			□			□

* Where the boundary between the LDNO and DNO network is at LV

Table 9: LDNO HV connection*

Tariff Name	Unit rate 1 p/kWh	Unit rate 2 p/kWh	Unit rate 3 p/kWh	Fixed charge p/MPAN/ day	Capacity charge p/kVA/day	Exceeded Capacity charge p/kVA/day	Reactive power charge p/kVArh
LV Domestic Aggregated or CT	Red	Amber	Green	□			
LV Domestic Aggregated (Related MPAN)	Red	Amber	Green				
LV Non-Domestic Aggregated or CT (No Residual)	Red	Amber	Green	□			
LV Non-Domestic Aggregated or CT Band 1	Red	Amber	Green	□			
LV Non-Domestic Aggregated or CT Band 2	Red	Amber	Green	□			
LV Non-Domestic Aggregated or CT Band 3	Red	Amber	Green	□			
LV Non-Domestic Aggregated or CT Band 4	Red	Amber	Green	□			
LV Non-Domestic Aggregated (Related MPAN)	Red	Amber	Green				
LV Site Specific (No Residual)	Red	Amber	Green	□	□	□	□
LV Site Specific Band 1	Red	Amber	Green	□	□	□	□
LV Site Specific Band 2	Red	Amber	Green	□	□	□	□
LV Site Specific Band 3	Red	Amber	Green	□	□	□	□
LV Site Specific Band 4	Red	Amber	Green	□	□	□	□
Unmetered Supplies	Black	Yellow	Green				
LV Sub Site Specific (No Residual)	Red	Amber	Green	□	□	□	□
LV Sub Site Specific Band 1	Red	Amber	Green	□	□	□	□
LV Sub Site Specific Band 2	Red	Amber	Green	□	□	□	□
LV Sub Site Specific Band 3	Red	Amber	Green	□	□	□	□

LV Sub Site Specific Band 4	Red	Amber	Green	□	□	□	□
HV Site Specific (No Residual)	Red	Amber	Green	□	□	□	□
HV Site Specific Band 1	Red	Amber	Green	□	□	□	□
HV Site Specific Band 2	Red	Amber	Green	□	□	□	□
HV Site Specific Band 3	Red	Amber	Green	□	□	□	□
HV Site Specific Band 4	Red	Amber	Green	□	□	□	□
LV Generation Aggregated	Red	Amber	Green	□			
LV Sub Generation Aggregated	Red	Amber	Green	□			□
LV Generation Site Specific	Red	Amber	Green	□			□
LV Sub Generation Site Specific	Red	Amber	Green	□			□
HV Generation Site Specific	Red	Amber	Green	□			□

Maximum Import Capacity

148 The Maximum Import Capacity (MIC) will be charged on a site basis (p/kVA/day).

149 The level of MIC will be agreed at the time of connection and when an increase has been approved. Following such an agreement (be it at the time of connection or an increase) no reduction in MIC will be allowed for a period of one year (subject to Part 4 below).

150 Subject to Part 4 below, reductions to the MIC may only be permitted once in a 12 month period and no retrospective changes will be allowed. Where MIC is reduced the new lower level will be agreed with reference to the level of the customers' maximum demand. It should be noted that where a new lower level is agreed the original capacity may not be available in the future without the need for network reinforcement and associated cost.

151 For LDNO connections, if capacity ramping has been agreed with the DNO Party, in accordance with the DNO Party's connection charging methodology, the phasing profile will apply instead of the above rules. Where an LDNO has agreed a phasing of capacity this will be captured in the Bilateral Connection Agreement with the DNO Party.

Standby Capacity for Additional Security on Site

152 Where standby capacity charges are applied, the charge will be set at the same rate as that applied to normal MIC.

Exceeded Capacity

153 Where a customer takes additional capacity over and above the MIC without authorisation, the excess will be classed as exceeded capacity. The exceeded portion of the capacity will be charged at the exceeded capacity rate (p/kVA/day). The exceeded capacity will be charged for the duration of the month in which the breach occurs and derived as follows:

Exceeded capacity (kVA) = max (0, Chargeable capacity – MIC)

Where:

Chargeable capacity = actual capacity utilised as set out below

MIC = Maximum Import Capacity

Minimum Capacity Levels

154 There is no minimum capacity threshold.

Capacity Value Calculations – Import

155 The actual capacity utilised will be calculated by the following formula:

$$\text{Import Demand} \ = \ 2 \times \sqrt{\text{AI}^2 + max(RI, RE)^2}$$

Where:

AI = Import consumption in kWh

RI = Reactive import in kVArh

RE = Reactive export in kVArh

Import Demand = kVA

156 This calculation is completed for every half hour and the maximum value from the billing period is captured.

157 Not used.

158 Only kVArh Import and kVArh Export values occurring at times of kWh Import are used.

Capacity Value Calculations – Export

159 The actual capacity utilised will be calculated by the following formula:

$$\text{Export Demand} \ = \ 2 \times \sqrt{\text{AE}^2 + max(RI, RE)^2}$$

Where:

AE = Export production in kWh

RI = Reactive import in kVArh

RE = Reactive export in kVArh

Export Demand = kVA

160 This calculation is completed for every half hour and the maximum value from the billing period is captured.

161 The export demand value is calculated to record the highest export value and used for information only.

162 Only kVArh Import and kVArh Export values occurring at times of kWh Export are used.

Reactive power charges

163 Reactive power charges will be applied based on chargeable reactive power. The charge will be p/kVArh for units in excess of a set amount.

164 The chargeable reactive power units will be calculated by the following formulae.

Chargeable Reactive Power Unit Calculations - Import

$$\text{Chargeable kVArh} = \max\left(\max(\text{RI}, \text{RE}) - \left(\sqrt{\left(\frac{1}{0.95^2} - 1\right)} \times AI\right), 0\right)$$

Where:

AI = Import consumption in kWh

RI = Reactive Import in kVArh

RE = Reactive export in kVArh

165 The 0.95 constant refers to the reactive charging threshold and the design power factor of the network model within the CDCM.

166 This calculation is completed for every half hour and the values summated over the billing period.

167 Only kVArh Import and kVArh Export values occurring at kWh Import are used.

168 The square root calculation will be to two decimal places.

Chargeable Reactive Power Unit Calculations - Export

$$\text{Chargeable kVArh} = \max\left(\max(\text{RI}, \text{RE}) - \left(\sqrt{\left(\frac{1}{0.95^2} - 1\right)} \times AE\right), 0\right)$$

Where:

AE = Export production in kWh

RI = Reactive import in kVArh

RE = Reactive export in kVArh

169 The 0.95 constant refers to the reactive charging threshold and the design power factor of the network model within the CDCM.

170 This calculation is completed for every half hour and the values summated over the billing period.

171 Only kVArh Import and kVArh Export values occurring at kWh Export are used.

172 The square root calculation will be to two decimal places.

Charging decimal places

173 DNO Parties will set unit charges (kWh) and reactive power charges (kVArh) to three decimal places. The rates for fixed charges and capacity charges and exceeded capacity charges will be set to two decimal places.

Part 3 — Network Unavailability Rebate Payments

174 A compensation payment may be payable to customers for network outages under two schemes.

175 The majority of customers are compensated under the Guaranteed Standards arrangements set out in The Electricity (Standards of Performance) Regulations 2015.

176 Customers who are off supply for greater than defined periods of time are entitled to a payment. This scheme applies to all demand customers and to all generators not included in the scheme described below.

177 For customers with generation connected at more than 1,000 volts and who have agreed a standard connection the following scheme will apply. This scheme is known as Distributed Generation Network Unavailability Rebate and payments will be calculated for each generator on the following basis:

Payment = A*B*(C-D)

Where:

A =	the network unavailability price of £2 per MW per hour.
B =	incentivised generator capacity; the highest active electrical power that can be generated (or the relevant incremental change of this amount in cases of the expansion of existing generation plant) by the generator for the year, according to the connection and/or use of system agreement(s).
C =	network interruption duration; the total duration of all occurrences (in minutes) on the network each of which involves a physical break in the circuit between itself and the rest of the system or due to any other open circuit condition, which prevents the generator from exporting power. It excludes:
-	50 per cent of the total duration of cases where the DNO Party takes pre-arranged outages of its equipment for which the statutory notification has been issued to the generator;
-	the cases where the generator has specific exemption agreements with the DNO Party in the connection and/or use of system agreement(s); and
-	the cases which are part of exempted events in the quality of service incentive or the Guaranteed Standard Statutory Instrument (such exemptions include interruptions of less than three minutes duration and industrial action).
D =	the baseline network interruption duration for the relevant year which either has a default value of zero or some other value agreed between the customer and the DNO Party and recorded within either; the connection offer, connection agreement and/or use of system agreement(s).

178 Distributed Generation Network Unavailability Rebate scheme payments will be calculated by the DNO Party on an annual basis (1st April - 31st March) and payments made shortly after the end of each year. This payment is automatic and does not need to be claimed by the generation customer. The de minimis level of rebate is £5 (and below that amount no payment will be made).

Part 4 – Transitional Protection for Customers affected by BSC Modification P432 or MHHS

179 This Part 4 sets out the transitional protection for Customers who may be affected by BSC Modification P432, being Customers with CT metering which are required to become half-hourly settled by migrating to

Measurement Class C or E, or any other CT Metering Points catered for by MHHS which are migrating to become half-hourly settled on a site-specific basis.

180 This Part 4 forms part of the CDCM, but also applies to IDNO Parties and to DNO Parties acting outside of their distribution services area.

181 Subject to paragraph 182 below, where:

a. a Customer takes a supply of electricity at a Premises where the electricity conveyed to the Premises is recorded through a CT meter; and

b. the Metering Point for such Premises has been migrated to either Measurement Class C or E for BSC Modification P432 or required to become half-hourly settled for MHHS; and

c. the supplier has provided contact details for the Customer to the DNO/IDNO Party (in accordance with Clause 19.14 of the DCUSA) no later than three months after the date of first migration,

then, with effect from the date of the migration of the Premises, the Domestic Aggregated or CT tariff, or the Non-Domestic Aggregated or CT tariff as applicable shall be applied.

182 With effect from 12 months after the date of the first migration of a Premises, the DNO/IDNO Party shall allocate the Premises to a charging band based on the current price control residual band thresholds applying a MIC set by reference to the highest peak import capacity billed during the 12-month transition period (unless and until a different MIC is agreed by the DNO/IDNO Party).

183 In this Part 4, the following definitions shall apply:

BSC Modification P432	means the modification to the BSC referred to as modification 'P432, Half Hourly Settlement for CT Advanced Metering Systems', which was implemented on 15th of April 2024.

Glossary of Terms used in this Schedule 16

In this Schedule 16, except where the context otherwise requires, the expressions in the left-hand column below shall have the meaning given to them in the right-hand column below:

Term	*Meaning*
allowed revenue	the DNO Party's "Combined Allowed Distribution Network Revenue" (as defined in the DNO Party's price control conditions).
all-the-way tariff	a tariff applicable to an end user rather than an LDNO.
boundary tariff	a tariff for use of the DNO Party's network by an LDNO where charges are based on boundary flows.
CDCM	the Common Distribution Charging Methodology.
charging year	the 12-month period ending on a 31st March for which charges and credits are being calculated.
coincidence factor	for a user category, aggregate load at the time of the DNO Party's system simultaneous maximum load divided by maximum aggregate load.
Common Distribution Charging Methodology	the methodology of that name with which the DNO Party is obliged to comply under its Distribution Licence.
Connection Type	has the meaning given to the term in the Energy Market Data Specification.
contribution proportion	the proportion of asset annuities which are deemed covered by customer contributions. This is defined for each combination of a tariff and a network level.
customer contribution	capital charges payable by customers under the DNO Party's connection charging policy.
CT	Current Transformer, indicating metering which uses current transformers to induce a reference current which is then passes through the meter (as compared to non-CT or whole current metering, where the full electrical current passes through the meter).
distribution time bands	the time bands described in paragraphs 40, 41 and 135.

diversity allowance	the extent, expressed as a percentage, to which the sum of the maximum load across all assets in the modelled network level is expected to exceed the simultaneous maximum load for the network level as a whole, as per paragraph 27.
Domestic Premises Indicator	has the meaning given to the term in the Energy Market Data Specification.
DRM	distribution reinforcement model. This may refer either to a 500 MW network model or to a cost allocation method based on such a model.
EDCM	means the EHV distribution charging methodology as described in Schedule 17 or Schedule 18 (as applicable to each DNO Party).
EHV	EHV refers to nominal voltages of at least 22kV and less than 132kV; network elements with a nominal voltage of 132kV are excluded from EHV for the purpose of this Schedule 16.
Eligible Bad Debt	means any bad debts with respect to Use of System Charges that the DNO Party can recover in accordance with the DNO Party's Distribution Licence. For the avoidance of doubt, this definition includes the DNO Party's bad debt and bad debt which the DNO Party is recovering on behalf of LDNOs.
embedded network	an electricity distribution system operated by an LDNO and embedded within the DNO Party's network.
end user	is a user, but excluding LDNOs.
excluded revenue	revenue from "Excluded Services" (as defined in the price control conditions).
Forecast Business Plan Questionnaire or FBPQ	the questionnaire that the DNO Party is required to submit under the Regulatory Instructions and Guidance issued by the Authority under the DNO Party's Distribution Licence.
GSP	grid supply point: where the network is connected to a transmission network.
HV	nominal voltages of at least 1kV and less than 22kV.
kV	Kilovolt (1,000 Volts): a unit of voltage.
kVAr	Kilo Volt Ampere reactive: a unit of reactive power flow.
kVArh	Kilo Volt Ampere reactive hour: a unit of total reactive power flow over a period of time.
kW	Kilowatt (1,000 Watts): a unit of power flow.
kWh	Kilowatt hour: a unit of energy.
LDNO	a licensed distribution network operator, meaning an IDNO Party or DNO Party operating an electricity distribution system outside of its Distribution Services Area.
load factor	for a user category, average load divided by maximum aggregate load.
LV	nominal voltages of less than 1kV.
LV Mains	LV distributing mains where: a. the upper boundary is at the secondary side (LV) of a distributor transformer; and b. the lower boundary is the point of connection associated with the LV service.
LV Services	the service line from the LV main to the DNO's protection device situated upon the customer's premises, including the joint and associated components connecting the service line to the distributing main.
Measurement Class	has the meaning given to that expression in the BSC.
modern equivalent asset and modern equivalent asset value	is a reference to the cost of replacing an asset at the time of the calculation.
MPAN	the unique number identifying a particular Metering Point or Metering System.
MVA	Mega Volt Ampere (1,000 kVA): a unit of network capacity.
MW	Megawatt (1,000 kW): a unit of power flow.
MWh	Megawatt hour (1,000 kWh): a unit of energy.
network	the DNO Party's Distribution System within the DNO Party's Distribution Services Area.
network level	the network is modelled as a stack of circuit and transformation levels between supplies at LV and the transmission network. A network level is any circuit or transformation level in that stack. Additional network levels are used for transmission exit and for LV and HV customer assets.
network model	a costed design for a 500 MW extension to the DNO Party's network, as described in paragraph 16.
peaking probability	is the peaking probability described in paragraph 49.
power factor	the ratio of energy transported (kW) to network capacity used (kVA).
portfolio tariff	a tariff for use of the DNO Party's network by an LDNO where charges are based on flows out of/into the LDNO's electricity distribution system from its end users or further nested networks.
price control conditions	the charge restriction conditions contained as special conditions within the DNO Party's Distribution Licence.
profile class	has the meaning given to that expression in the Balancing and Settlement Code.

regulatory asset value	is the DNO Party's regulatory asset value as described in the Regulatory Instructions and Guidance issued by the Authority under the DNO Party's Distribution Licence.
Related MPAN	has the meaning given to the expression "Related Metering Points" in the Retail Energy Code.
RRP	regulatory reporting pack, a dataset produced each year by each DNO Party for the Authority.
service model	a costed design for the typical dedicated assets of a category of network users.
standing charge	any fixed or capacity charge that does not depend on actual use of the network.
Supercustomer	in relation to billing, is billing by using aggregated data, as described in paragraph 128.
Supplier of Last Resort	a supply licensee to which a Last Resort Supply Direction applies, where Last Resort Supply Direction has the meaning given to that expression in the Supply Licence.
system simultaneous maximum load	the maximum load for the GSP Group as a whole.
time pattern regime or TPR	means a code that is used to identify the switching times of a meter register.
unit	where the context permits, the word unit refers to kWh.
unit rate	a charging or payment rate based on units distributed or units generated. Unit rates are expressed in p/kWh. Tariffs applied to multi-rate meters and/or using several time bands for charging have several unit rates.
user	refers to customers (whether demand customers or generators) and (where relevant) LDNOs.

SCHEDULE 17: EHV CHARGING METHODOLOGY (FCP MODEL)

This Schedule 17, version 14.1, is to be used for the calculation of Use of System Charges which will become effective from, 01 April 2022 and remain effective until superseded by a revised version.

1. INTRODUCTION

1.1 This Schedule 17 sets out one of the two EHV Distribution Charging Methodologies (**EDCM**). The other EDCM is set out in Schedule 18.

1.2 This Schedule 17 sets out the methods, principles, and assumptions underpinning the EDCM for the calculation of Use of System Charges by the DNO Parties with the following Market Domain I.D.s:

HYDE;

SOUT;

SPOW;

MANW;

EMEB; and

MIDE.

1.3 In order to comply with this methodology statement when setting distribution Use of System Charges the DNO Parties referred to above will populate the following EDCM model versions:

a. for charges effective from 1 April 2020:

i. where the Authority has given no direction under Clause 19.1B, EDCM model version FCP v3 as issued by the Panel in accordance with Clause 14.5.3; or

ii. where the Authority has given direction under Clause 19.1B that periods of notice described in Clause 19.1A need not apply, EDCM model version FCP v3(332) as issued by the Panel in accordance with Clause 14.5.3;

b. for charges effective from 1 April 2021:

i. where the Authority has given no direction under Clause 19.1B, EDCM model version FCP v7 as issued by the Panel in accordance with Clause 14.5.3; or

ii. where the Authority has given direction under Clause 19.1B that periods of notice described in Clause 19.1A need not apply, EDCM model version FCP v7(379) as issued by the Panel in accordance with Clause 14.5.3; or

c. or charges effective from 1 April 2022 or later:

i. where the Authority has given no direction under Clause 19.1B, EDCM model version FCP v9 as issued by the Panel in accordance with Clause 14.5.3; or

ii. where the Authority has given direction under Clause 19.1B that periods of notice described in Clause 19.1A need not apply, EDCM model version FCP v10 as issued by the Panel in accordance with Clause 14.5.3.

Main Steps

1.4 The EDCM involves four main steps.

1.5 Step 1 is the application of load flow techniques and the LRIC or FCP methodologies to determine an EDCM tariff element, known as Charge 1, which represents costs associated with demand-led reinforcement, estimated by reference to power flows in the maximum demand scenario.

1.6 Step 2 involves the allocation of DNO Party costs to Connectees using appropriate cost drivers.

1.7 Step 3 adds a scaling element to charges which is related to Allowed Revenue.

1.8 Step 4 uses CDCM charges to determine the element of portfolio charges to be applied in the case of DNO/IDNO Parties who are supplied from the DNO Party's network at voltages higher than the scope of CDCM charges.

1.9 Figure 1 provides a diagrammatic overview of the steps involved for import charges.

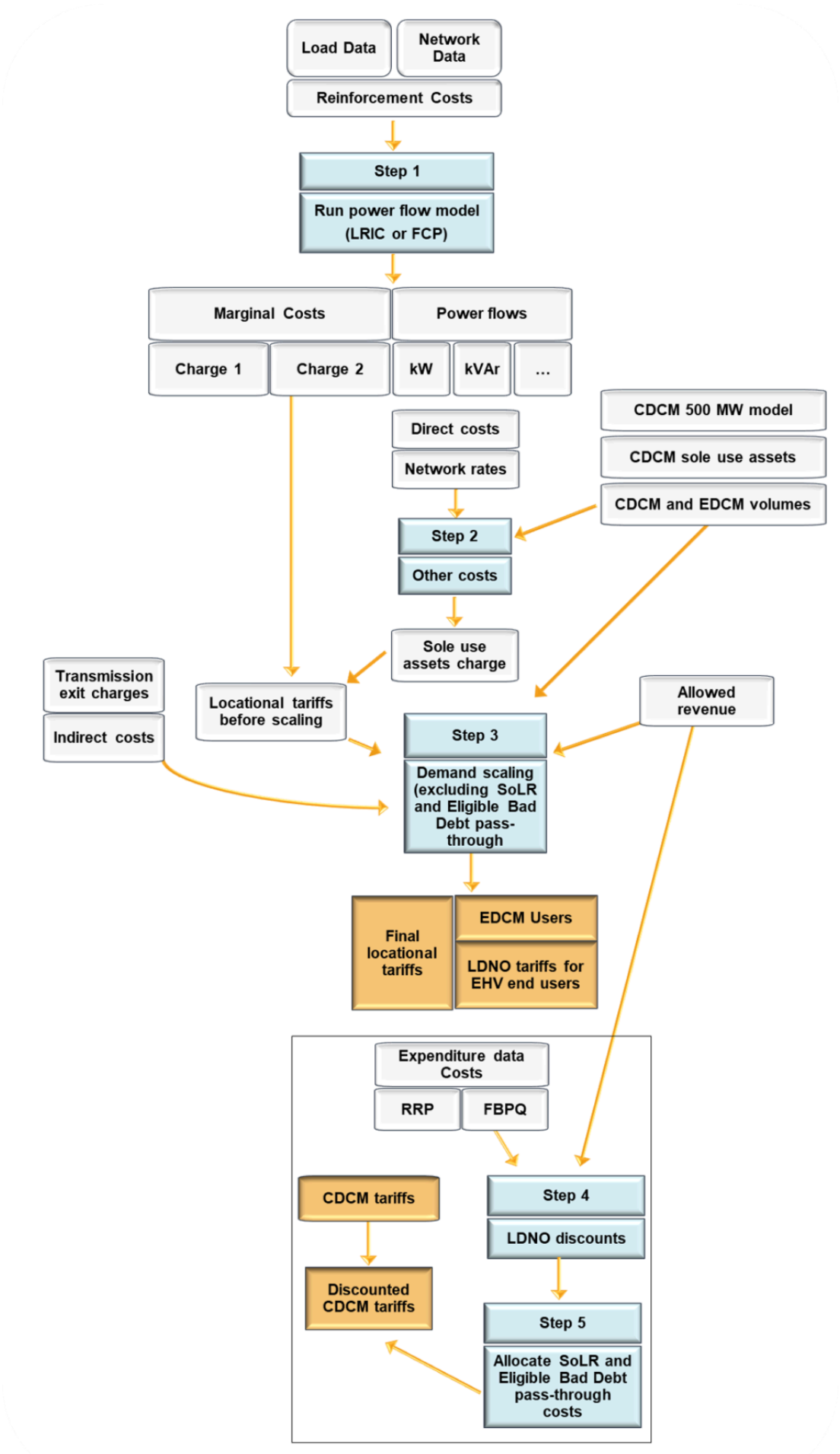
Load Data
Network Data
Reinforcement Costs
Step 1
Run power flow model (LRIC or FCP)
Marginal Costs
Power flows
Charge 1
Charge 2
kW
kVAr
...
CDCM 500 MW model
Direct costs
CDCM sole use assets
Network rates
CDCM and EDCM volumes
Step 2
Other costs
Sole use assets charge
Transmission exit charges
Indirect costs
Locational tariffs before scaling
Allowed revenue
Step 3
Demand scaling (excluding SoLR and Eligible Bad Debt pass-through
Final locational tariffs
EDCM Users
LDNO tariffs for EHV end users
Expenditure data Costs
RRP
FBPQ
CDCM tariffs
Step 4
LDNO discounts
Discounted CDCM tariffs
Step 5
Allocate SoLR and Eligible Bad Debt pass-through costs

2. FORWARD COST PRICING ANALYSIS

Introduction

2.1 The Forward Cost Pricing (FCP) model is used to calculate annual incremental charges for EDCM Connectees. A fundamental principle of the FCP model is that the revenue recovery generated from its incremental charges is equal to the expected cost of reinforcement. These incremental charges provide cost signals relative to the available capacity in a Network Group, the expected cost of reinforcement of the Network Group and the time before the reinforcement is expected to be necessary. Load and generation incremental charges are derived separately.

2.2 The key FCP modelling steps consist of:

a. configuration of the Authorised Network Model;

b. development of demand data sets;

c. definition of Network Groups;

d. power flow analyses:

i. assessment of network security requirements (load);

ii. assessment of network security requirements (generation);

e. calculation of reinforcement costs; and

f. calculation of FCP load incremental charges (£/kVA/annum);

Configuration of the Authorised Network Model

2.3 Power flow analyses are performed on the Authorised Network Model. This is a representation of the DNO Party's EHV network (from the Grid Supply Point level down to and including the HV busbars at the EHV/HV transformation level) expected to exist and be operational in the Regulatory Year for which Use of System Charges are being calculated (save that, until 5 November 2016, where charges are being calculated for two or more Regulatory Years, the same Authorised Network Model will be used for all the years).

2.4 Guidance on the configuration of the Authorised Network Model is provided in the section 4 (Authorised Network Model) of Annex 1 - Implementation Guide.

Development of Network Demand Data sets

2.5 Load data used in the power flow analyses is based on network demand data from the DNO Party's Long Term Development Statement (or LTDS), which contains a five-year forecast of substation maximum demands. A 10-year forecast is derived by extrapolation of the five-year forecast. Existing generation data is based on the Maximum Export Capacities of EDCM Generation.

2.6 Guidance on the development of the Network Demand Data sets is provided in section 5 (Network Demand Data) of Annex 1 - Implementation Guide.

Definition of Network Groups

2.7 The Authorised Network Model is split into Network Groups, thereby reflecting the zonal nature of the FCP model. A Network Group is a contained portion of the Authorised Network Model defined by physical, operational and technical boundaries that is not electrically connected to another part of the network at the same voltage level under normal operating conditions. A Network Group is defined as the network normally supplied from a Grid Supply Point (GSP) substation, a Bulk Supply Point (BSP) substation, or a Primary Substation. In situations where GSP substations, BSP substations or Primary Substations are operated in parallel, the network associated with such parallel GSP substations, BSP substations or Primary Substations is considered as one Network Group.

2.8 Guidance relating to the definition of Network Groups is presented in section 6 (Network Groups) of Annex 1 - Implementation Guide.

Power Flow Analyses

2.9 Power Flow analyses are undertaken using AC load flow methods.

Assessment of network security requirements (load)

2.10 Contingency analyses are performed on the Authorised Network Model to which the relevant Network Demand Data sets have been applied. This is done in order to identify all load-related reinforcements expected within the 10-year horizon in line with network planning security requirements (as can be found in ER P2/6). N-1 and, where required, N-2 contingency analyses are performed on the Authorised Network Model for each year within the 10-year horizon.

2.11 Reinforcements identified within the 10-year horizon are used to determine FCP load incremental charges. As the power flow analyses progress through the 10-year planning period the same reinforcements will be identified - only newly-identified reinforcements in each year are considered in order to avoid double-counting. The analysis considers thermal ratings only.

2.12 Guidance relating to these power flow analyses is presented in section 7 (Power flow analysis process) of Annex 1 - Implementation Guide.

Calculation of reinforcement costs

2.13 It is assumed that the reinforcement or any Branch is undertaken in a standardised way with standardised costs. In practice, the design data used by the DNO Party to prepare offers for connection to its Distribution System should be used when determining the extent and likely cost of reinforcement.

2.14 Guidance relating to the calculation of reinforcement costs is presented in section 8 (Calculation of reinforcement costs) of Annex 1 - Implementation Guide.

Calculation of FCP load incremental charges

2.15 The FCP load incremental charge for a Network Group is a derived from all expected reinforcements identified within the 10-year horizon period within that Network Group.

2.16 The FCP load incremental charging function is in integral form with exponential load growth and continuous discounting applied. The following charging function is used to derive the Network Group FCP load incremental charge (£/kVA/annum) for EDCM Customers:

$$FCP_{load} = \sum_{j} \frac{i\left(\frac{A_j}{C_l}\right)\left(\frac{D}{C_l}\right)^{\frac{2i}{g_l}-1}}{1-e^{-iT}}$$

Where:

FCPload	=	FCP load incremental charge (£/kVA/annum)
j	=	in index of Branch whose reinforcement is required in the planning period
i	=	discount rate, which is set to equal the latest pre-tax real weighted average cost of capital (CC below) for each DNO Party calculated using the following formula: CC = (Gearing Assumption x Pre-Tax Cost of Debt) + (1- Gearing Assumption)*(Post Tax Cost of Equity/(1-Corporation Tax Rate)) where: Gearing Assumption is set to the 'Notional gearing' value for the regulatory year for which tariffs are being set in the latest version of the PCFM (InputSummary sheet, Finance inputs, Vanilla allowed return on capital) prepared for the relevant DNO Party for publication with such tariff setting on the DNO Party's website; Pre-Tax Cost of Debt is set to the 'Allowed return on debt' value for the regulatory year for which tariffs are being set in the latest version of the PCFM (InputSummary sheet, Finance inputs, CAPM calculator tool: allowed return on debt) prepared for the relevant DNO Party for publication with such tariff setting on the DNO Party's website; Post Tax Cost of Equity is set to the 'Allowed return on equity' value for the regulatory year for which tariffs are being set in the latest version of the PCFM (InputSummary sheet, Finance inputs, CAPM calculator tool: allowed return on equity) prepared for the relevant DNO Party for publication with such tariff setting on the DNO Party's website; and Corporation Tax Rate is set to the 'Corporation tax rate' value for the regulatory year for which tariffs are being set in the latest version of the PCFM (InputSummary sheet, Tax, Tax policy) prepared for the relevant DNO Party for publication with such tariff setting on the DNO Party's website. In the event of any value not being available from the above data sources, the DNO Party will prepare a forecast of the value to be used in the CC formula instead. The CC value is calculated as a percentage, and rounded to two decimal places.
Aj	=	total cost (£) of asset "j" reinforcement in the considered Network Group over 10-year period
I	=	index of the total load level at which reinforcement of Branch "j" is required
Cl	=	total demand (kVA) of the Network Group, in the Maximum Demand Scenario, in the year Yl in which reinforcement of Branch "j" is required
D	=	total demand (kVA) in the Network Group in the first year of the 10-year horizon in the Maximum Demand scenario
gl	=	annual average load growth rate corresponding to the year in which the reinforcement is expected to be required (see below)
T	=	10 years over which the reinforcement cost is recovered

2.17 The annual average Network Group load growth rate corresponding to the year in which the reinforcement is expected, gl, is calculated by:

$$g_l = \frac{ln\left(\frac{C_l}{D}\right)}{Y_l}$$

Where:

gl	=	annual average load growth rate corresponding to the year in which the reinforcement is expected to be required
Yl	=	number of years before the reinforcement of Branch "j" is required
Cl	=	total demand (kVA) of the Network Group, in the Maximum Demand Scenario, in the year Yl in which reinforcement of Branch "j" is required

D	=	total demand (kVA) in the Network Group in the first year of the 10-year horizon in the Maximum Demand scenario

2.18 Guidance relating to the calculation and application of FCP load incremental charges is presented in section 9.1 (FCP load incremental charge) of Annex 1.

Outputs

2.19 The outputs of the FCP modelling are:

a. Network Group ID;

b. Charge 1: Demand (load) charge (£/kVA/annum);

c. Parent Network Group ID;

d. Active Power (kW) of demand (load) for Maximum Demand Scenario;

e. Reactive Power (kVAr) of demand (load) for Maximum Demand Scenario;

f. Active Power (kW) of demand (generation) for Maximum Demand Scenario; and

g. Reactive Power (kVAr) of demand (generation) for Maximum Demand Scenario.

3. EDCM CHARGE COMPONENTS FOR CONNECTEES

3.1 This section sets out the different charge components that will apply to Connectees under the EDCM. Charge components are the outputs of the EDCM and make up the distribution use of system charges applied to Connectees.

3.2 In the EDCM, each set of charges comprises import rates, export rates, or both, as applicable to the Connectee. The DNO Party's Relevant Charging Statement includes information that enables a Supplier to determine which Designated EHV Property each set of charges applies to.

3.3 Demand charges under the EDCM comprise the following individual components:

- Import fixed charges.
- Import capacity charges.
- Exceeded import capacity charges.
- Unit rate charges for consumption at the time of the DNO Party's peak (super-red time band).

3.4 The EDCM charge components for import are listed in table 3.4.

Table 3.4 Charge components for import

Charge component	Unit
Import fixed charge	p/day
Import capacity charge	p/kVA/day
Exceeded import capacity charge	p/kVA/day
Super-red import unit charge	p/kWh

3.5 Generation charges under the EDCM comprise the following individual components:

- Export fixed charges

- Export capacity charges
- Exceeded export capacity charges
- Export super-red unit rate (credit)

3.6 The EDCM charge components for export are listed in table 3.6.

Table 3.6 Charge components for export

Charge component	Unit
Export fixed charge	p/day
Export capacity charge	p/kVA/day
Exceeded export capacity charge	p/kVA/day
Export super-red unit rate	p/kWh

3.7 The next section details the calculation of the elements that determine the charge components described above.

4. CALCULATION OF EDCM CHARGE COMPONENTS

4.1 EDCM charge components are derived from tariff elements. This section describes the method for calculating each of these charge elements.

5. CHARGEABLE EXPORT CAPACITY FOR EXPORT CHARGES

5.1 The Chargeable Export Capacity for each Connectee is defined as the Maximum Export Capacity minus any capacity that is exempt from use of system charges in the charging year.

6. APPLICATION OF FCP CHARGE 1

6.1 Each tariff in the model is linked to one FCP location or network group. Each FCP network group may be linked to a parent FCP network group and a grandparent FCP network group. Each FCP network group may have a charge 1 in £/kVA/year associated with it.

6.2 The import charges for the application of charge 1 is given by the formulas:

For Connectees with zero average kW/kVA:

[p/kWh super-red rate] = ([parent charge 1 £/kVA/yr] * (abs[A1] / (SQRT(A1^2 + R1^2)) / [Super-red hours] *100) + ([grandparent charge 1 £/kVA/yr] * (abs[A2] / (SQRT(A2^2 + R2^2)) / [Super-red hours] *100)

[p/kVA/day capacity charge] = ([network charge 1 £/kVA/year] /[days in Charging Year]*100) + ([parent charge 1 £/kVA/yr] * (–R1 * Average kVAr/kVA]) / (SQRT(A1^2 + R1^2)) / [days in Charging Year] *100) + ([grandparent charge 1 £/kVA/yr] * (–R2 * [Average kVAr/kVA]) / (SQRT(A2^2 + R2^2)) / [days in Charging Year] *100)

For all other Connectees:

[p/kWh super-red rate] = [parent charge 1 £/kVA/yr] * (abs[A1] – (R1 * ([Average kVAr/kVA] / [Average kW/kVA])) / (SQRT(A1^2 + R1^2)) / [Super-red hours] *100 + ([grandparent charge 1 £/kVA/yr] * (abs[A2] – (R2 * ([Average kVAr/kVA] / [Average kW/kVA])) / (SQRT(A2^2 + R2^2)) / [Super-red hours] *100)

[p/kVA/day capacity charge] = [network group charge 1 £/kVA/year] / [days in Charging Year]*100

Where:

A1 and R1 are the values of the active power flow and reactive power flow modelled through the parent network group in the maximum demand scenario.

A2 and R2 are the values of the active power flow and reactive power flow modelled through the grandparent network group in the maximum demand scenario.

If both A1 and R1 are equal to zero, in respect of that network level in the formulas above, the term (abs[A1] / (SQRT(A1^2 + R1^2)) is set equal to 1, (–R1 * Average kVAr/kVA]) / (SQRT(A1^2 + R1^2)) is set equal to zero, and ([Average kVAr/kVA] / [Average kW/kVA])) / (SQRT(A1^2 + R1^2)) is also set to zero.

If both A2 and R2 are equal to zero, in respect of that network level in the formulas above, the term (abs[A2] / (SQRT(A2^2 + R2^2)) is set equal to 1, (–R2 * Average kVAr/kVA]) / (SQRT(A2^2 + R2^2)) is set equal to zero, and ([Average kVAr/kVA] / [Average kW/kVA])) / (SQRT(A2^2 + R2^2)) is also set to zero.

Any negative contributions to the [p/kVA/day capacity charge] or the [p/kWh super-red rate] from the parent or the grandparent network groups are set to zero.

Super red hours are the number of hours in the DNO Party's super-red time band.

The average kW/kVA and average kVAr/kVA figures are forecasts for the Charging Year, based on data from the most recent regulatory year for which data were available in time for setting charges for the Charging Year. Specifically, active and reactive power consumptions are averaged over a super-red time band, which is a seasonal time of day period determined by the DNO Party to reflect the time of peak, and then divided by the Maximum Import Capacity (averaged over the same financial year). If the DNO Party considers that the reactive consumption data relates to export rather than import (e.g. the average kVAr figure exceeds half of the Maximum Import Capacity) then the Maximum Import Capacity in the denominator should be replaced by the Maximum Export Capacity of the same Connectee. The average kVAr divided by kVA is restricted to be such that the combined active and reactive power flows cannot exceed the Maximum Import Capacity.

6.3 Charge 1 is applied to export charges as a credit. The credit is expressed as a negative charge rate in p/kWh and is applied in respect of active power units exported during the DNO Party’s super-red time band. The credit rate is set to zero for Connectees who are assigned an F Factor of zero. The credit rate is calculated as follows:

[p/kWh super-red export rate] = -100*[Proportion eligible for charge 1 credits] *([network charge 1 £/kVA/year] + [parent charge 1 £/kVA/year] + [grandparent charge 1 £/kVA/year]) * ([Chargeable export capacity]/[Maximum export capacity]) /[number of hours in the super-red time band]

Where:

The proportion eligible for charge 1 credits is zero if the F factor that is assigned to the Connectee as described in the FCP methodology is equal to zero, and 1 otherwise.

The super-red generation rate is not applied to Connectees with zero Chargeable Export Capacity.

7. NO APPLICATION OF NEGATIVE CHARGES

7.1 Under FCP, charge 1 is either zero or positive. Any negative values of Charge 1 are set to zero.

8. DEMAND SIDE MANAGEMENT (DSM) AND GENERATION SIDE MANAGEMENT (GSM)

8.1 Some EDCM Customers are subject to demand side management (DSM) or generation side management (GSM) agreements.

8.2 For Connectees with DSM agreements, let “chargeable capacity” be equal to the Maximum Import Capacity minus the capacity that is subject to restrictions under a DSM agreement. These restrictions would take into account any seasonal variations built into these agreements.

8.3 For Connectees with DSM agreements, DSM-adjusted local and remote (or parent and grandparent) elements of the FCP charge are calculated as the product of the ratio of “chargeable capacity” to Maximum Import Capacity and the unadjusted elements of the FCP charge. Where the Maximum Import Capacity is zero, this ratio is set to 1. The DSM-adjusted local element of the FCP charge 1 is applied to the Maximum Import Capacity, and the DSM-adjusted remote (or parent and grandparent) element of the FCP charge 1 is applied to units consumed during the super-red time band.

8.4 For Connectees with GSM agreements, no adjustments are made in the EDCM.

9. TRANSMISSION CONNECTION (EXIT) CHARGES FOR DEMAND

9.1 A separate transmission exit charge is applied to demand tariffs.

9.2 A single charging rate, in p/kW/day is calculated as follows:

Transmission exit charging rate p/kW/day = 100 / DC * ISOP charge / (CDCM system maximum load + total EDCM peak time consumption)

Where:

DC is the number of days in the Charging Year.

ISOP charge is the DNO Party’s forecast annual expenditure on transmission connection point charges in £.

CDCM system maximum load is the forecast system simultaneous maximum load from CDCM Connectees (in kW) from CDCM table 2506.

Total EDCM peak time consumption (in kW) calculated by multiplying the Maximum Import Capacity of each Connectee by the forecast peak-time kW divided by forecast maximum kVA of that Connectee (adjusted for losses to transmission and, if necessary, for Connectees connected for part of the Charging Year) and aggregating across all EDCM Customer demand.

9.3 The single p/kW/day charging rate is converted into a p/kVA/day import capacity based charge for each EDCM Connectee as follows:

Transmission exit charge p/kVA/day = [Transmission exit charging rate in p/kW/day] * [Forecast peak-time kW divided by kVA of that Connectee, adjusted for transmission losses and, if necessary for Connectees connected part of the year]

10. TRANSMISSION CONNECTION (EXIT) CREDITS FOR GENERATORS

10.1 A capacity-based credit related to transmission exit is applied to generation tariffs.

10.2 Transmission exit credits are paid to generators that have an agreement with the DNO, the terms of which require the generator, for the purposes of P2/6 compliance, to export power during supergrid transformer (SGT) outage conditions.

10.3 The rate in p/kVA/day for each generation customer would be calculated as follows:

Transmission exit credit p/kVA/day = -[Transmission exit charging rate in p/kW/day] * [Capacity eligible for credits in kW] / [Chargeable Export Capacity in kVA of that Connectee]

Where:

Transmission exit charging rate in p/kW/day is calculated as described for demand tariffs.

Capacity eligible for credits (in kW) is the capacity that is made available by the generator under the agreement with the DNO.

Chargeable Export Capacity (in kVA) is the forecast average value of the maximum export capacity of the generator over the charging year, less any capacity that is exempt from use of system charges in the charging year.

The generation transmission connection (exit) rate is not calculated for Connectees with zero Chargeable Export Capacity.

10.4 Transmission connection (exit) credits are applied to the Chargeable Export Capacity (in kVA)

11. REACTIVE POWER CHARGES

11.1 The EDCM does not include a separate charge component for any reactive power flows.

12. EXPORT CAPACITY CHARGES

12.1 The EDCM includes an export capacity charge.

12.2 EDCM DG revenue target £/year = GL * [Total 2005-2010 EDCM generation capacity] / ([Total 2005–2010 EDCM generation capacity] + [Total 2005–2010 CDCM generation capacity]) + AGPa * [Total post–2010 EDCM generation capacity] / ([Total post–2010 EDCM generation capacity] + [Total post–2010 CDCM generation capacity]) + (OM * ([Total Pre–2005 EDCM DG capacity] + [Total Post–2010 EDCM DG capacity]))

Where:

GL is the incentive revenue in the charging year in respect of generators connected between 2005 and 2010 calculated for the charging year as in paragraph 11.10 of the Special Conditions of the Electricity Distribution Licence (CRC11). From and including Regulatory Year 2015/2016 GL is zero.

AGPa is the average of the values of GPa for the charging year and each of the two years immediately preceding the charging year. For Regulatory Year 2014/2015 GPa is calculated using a modified version of the formula in paragraph 11.6 of the Electricity Distribution Licence (CRC11) resulting from DPCR5. To

calculate GPa, the term GPX is replaced by the term GPS in the formula in paragraph 11.6. Both GPX and GPS are defined in paragraph 11.7 of the same document. For Regulatory Years 2015/16 onwards GPa is zero.

Total Pre-2005 EDCM DG capacity is the aggregate maximum export capacity of all non-exempt EDCM generators that connected before 1 April 2005, adjusted for part-year connected generators. In the case of generators that have subsequently increased their maximum export capacity, the part of their capacity that was added after 1 April 2005 would be ignored.

Total 2005–2010 EDCM generation capacity is the sum of the maximum export capacities of all non-exempt EDCM generators that connected between 1 April 2005 and 31 March 2010, adjusted for part-year connected generators.

Total Post–2010 EDCM generation capacity is the sum of the maximum export capacities of all non-exempt EDCM generators that connected on or after 1 April 2010, adjusted for part-year connected generators. In the case of generators that originally connected before 1 April 2010 and have increased their maximum export capacity on or after 1 April 2010, the capacity that was added after 1 April 2010 should be included.

Total 2005–2010 CDCM generation capacity is the sum of the maximum export capacities of all non-exempt CDCM generators that connected between 1 April 2005 and 31 March 2010, adjusted for part-year connected generators.

Total Post–2010 CDCM generation capacity is the sum of the maximum export capacities of all non-exempt CDCM generators that connected on or after 1 April 2010, adjusted for part-year connected generators.

OM is an allowance in £/kW in respect of the operational and maintenance costs for assets that are deemed to have been installed for the purposes of connecting generators to the distribution network. The value of OM is set to £0.20/kW.

12.3 A fixed export capacity charge in p/kVA/day is calculated as follows:

Fixed export capacity charge in p/kVA/day = (100 / DC) * [EDCM DG revenue target] / [Total EDCM generation capacity]

Where:

EDCM DG revenue target in £/year is calculated as described above

Total EDCM generation capacity (in kVA) is the aggregate Chargeable Export Capacity of all Connectees, adjusted, if necessary for Connectees connected part of the year.

The fixed export capacity charge in p/kVA/day is applied to the Chargeable Export Capacity of each EDCM Connectee.

13. ALLOCATION DRIVERS FOR OTHER CHARGE ELEMENTS IN THE EDCM

13.1 In addition to charges calculated using the FCP and LRIC methodologies and transmission connection (exit) charges, the EDCM includes charge elements relating to:

- the DNO Party's direct operating costs (this includes inspection and maintenance costs, operating expenditure relating to fault repairs and the cost of tree cutting);

- the DNO Party's indirect costs. (these are costs that are not directly related to network assets, such as business support costs);
- the DNO Party's network rates (these are business rates paid by DNO Parties); and
- the DNO Party's residual revenue.

13.2 The residual revenue is that part of the DNO Party's Allowed Revenue less any revenue relating to recovery of the DNO Party's Supplier of Last Resort and Eligible Bad Debt pass-through costs that has not been pre-allocated to demand charges using cost-based charge elements.

13.3 EDCM charge elements are determined using allocation drivers. The following allocation drivers are used in the EDCM:

- The value of assets that are for the sole use of a Connectee (sole use assets). This is relevant to import and export charges.
- The value of site-specific shared network assets used by the Connectee. This is relevant to import charges only.
- The sum of historical consumption at the time of system peak and 50 per cent of Maximum Import Capacity. This is relevant to import charges only.
- Chargeable Export Capacity. This is relevant to export charges only.

13.4 The methods used to determine the value of sole use assets and shared site-specific shared network assets are described below.

14. SOLE USE ASSETS

14.1 The value of a customer's sole use assets used is expressed in the form of a modern equivalent asset value (MEAV) in £.

14.2 Sole use assets are assets in which only the consumption or output associated with a single Connectee can directly alter the power flow in the asset, taking into consideration all possible credible running arrangements, i.e. all assets between the Connectee's Entry/Exit Point(s) and the Point(s) of Common Coupling with the general network are considered as sole use assets.

14.3 The Point of Common Coupling for a particular single Connectee is the point on the network where the power flow associated with the single Connectee under consideration, may under some (or all) possible arrangements interact with the power flows associated with other Connectees, taking into account all possible credible running arrangements.

14.4 Where a single site has both import and export charges, associated with import and export meter registrations, the sole use assets are allocated between the import and export proportionally to Maximum Import Capacity and Maximum Export Capacity respectively. Where any part of the Maximum Export Capacity associated with an export meter registration is exempt from use of system charges in the charging year, the value of sole use assets allocated to the export tariff is reduced by multiplying it by the ratio of the Chargeable Export Capacity to the Maximum Export Capacity.

14.5 Where an EDCM site was originally connected as a single Connected Installation, and has subsequently split into multiple Connected Installations, these sites continue to be considered as one site for the purposes of determining sole use assets. The sole use asset MEAV is allocated between these Connected Installations in proportion to their Maximum Import Capacities and Maximum Export Capacities.

15. SITE-SPECIFIC SHARED NETWORK ASSETS

15.1 A Connectee's notional site-specific shared network asset value is the value of network assets that are deemed to be used by that Connectee, other than sole use assets as defined earlier.

15.2 The value of notional site-specific shared assets used by each Connectee is expressed in the form of a modern equivalent asset value (MEAV) in £.

15.3 The value of shared network assets used by each demand Connectee is calculated as set out below.

15.4 Five levels are defined for the network's assets:

- Level 1 comprises 132 kV circuits.
- Level 2 comprises substations with a primary voltage of 132 kV and a secondary voltage of 22 kV or more.
- Level 3 comprises circuits of 22 kV or more but less than 132 kV.
- Level 4 comprises substations with a primary voltage of 22 kV or more but less than 132 kV and a secondary voltage of less than 22 kV.
- Level 5 comprises substations with a primary voltage of 132 kV and a secondary voltage of less than 22 kV.

15.5 In some cases, it might be appropriate to treat 66 kV equipment as being equivalent to 132 kV equipment and allocate Connectees to categories accordingly.

15.6 EDCM Customers are split into 15 categories based on the parts of the EHV network they are deemed to use. This is based on the Point of Common Coupling. The Point of Common Coupling might be at a different voltage than the Connectee's connection, and might also be at a different voltage than the voltage of connection when the Connectee was connected.

Table 15.6 Categorisation of EDCM Customers

Category	Definition
Category 0000	Point of Common Coupling at the GSP, whether the GSP is shared or not.
Category 1000	In England or Wales only, Point of Common Coupling at a voltage of 132 kV, unless the Connectee qualifies for category 0000.
Category 1100	Point of Common Coupling at 22 kV or more on the secondary side of a substation where the primary side is attached to a 132 kV circuit.
Category 0100	Point of Common Coupling at 22 kV or more, but less than 132 kV, on the secondary side of a substation where the primary side is attached at 132 kV to a co-located GSP with no use of any 132 kV circuits.
Category 1110	Point of Common Coupling at a voltage of 22 kV or more, but less than 132 kV, not at a substation, fed from a substation whose primary side is attached to a 132 kV distribution circuit.
Category 0110	Point of Common Coupling at a voltage of 22 kV or more, but less than 132 kV, not at a substation, fed from a substation whose primary side is attached at 132 kV to a co-located GSP with no use of any 132 kV circuits.
Category 0010	Point of Common Coupling at a voltage of 22 kV or more, but less than 132 kV, fed from a GSP with no intermediate transformation.
Category 0001	Point of Common Coupling at a voltage of less than 22 kV on the secondary side of a substation where the primary side is attached at 132 kV to a co-located GSP with no circuit.
Category 0002	Point of Common Coupling at a voltage of less than 22 kV on the secondary side of a substation where the primary side is attached at 22 kV or more but less than 132 kV, to a co-located GSP with no circuit.
Category 1001	Point of Common Coupling at a voltage of less than 22 kV on the secondary side of a substation whose primary side is attached to a 132 kV distribution circuit.
Category 0011	Point of Common Coupling at a voltage of less than 22 kV on the secondary side of a substation whose primary side is at a voltage of 22 kV or more, but less than 132 kV, fed from a GSP with no intermediate transformation.

Category 0111	Point of Common Coupling at a voltage of less than 22 kV on the secondary side of a substation whose primary side is at a voltage of 22 kV or more, but less than 132 kV, fed through a distribution circuit from a substation whose primary side is attached at 132 kV to a co-located GSP with no circuit.
Category 0101	Point of Common Coupling at a voltage of less than 22 kV on the secondary side of a substation whose primary side is at a voltage of 22 kV or more, but less than 132 kV, fed from the secondary side of a co-located substation whose primary side is attached at 132 kV to a co-located GSP with no circuit.
Category 1101	Point of Common Coupling at a voltage of less than 22 kV on the secondary side of a substation whose primary side is at a voltage of 22 kV or more, but less than 132 kV, fed from the secondary side of a co-located substation whose primary side is attached to a 132 kV distribution circuit.
Category 1111	Point of Common Coupling at a voltage of less than 22 kV on the secondary side of a substation whose primary side is at a voltage of 22 kV or more, but less than 132 kV, fed through a distribution circuit from a substation whose primary side is attached to a 132 kV distribution circuit.

15.7 All references to GSP in table 15.6 above relate to interconnections with the onshore National Electricity Transmission System.

15.8 The figure below provides examples of Connectees who might be placed in each of the categories described above.

Customer Categories

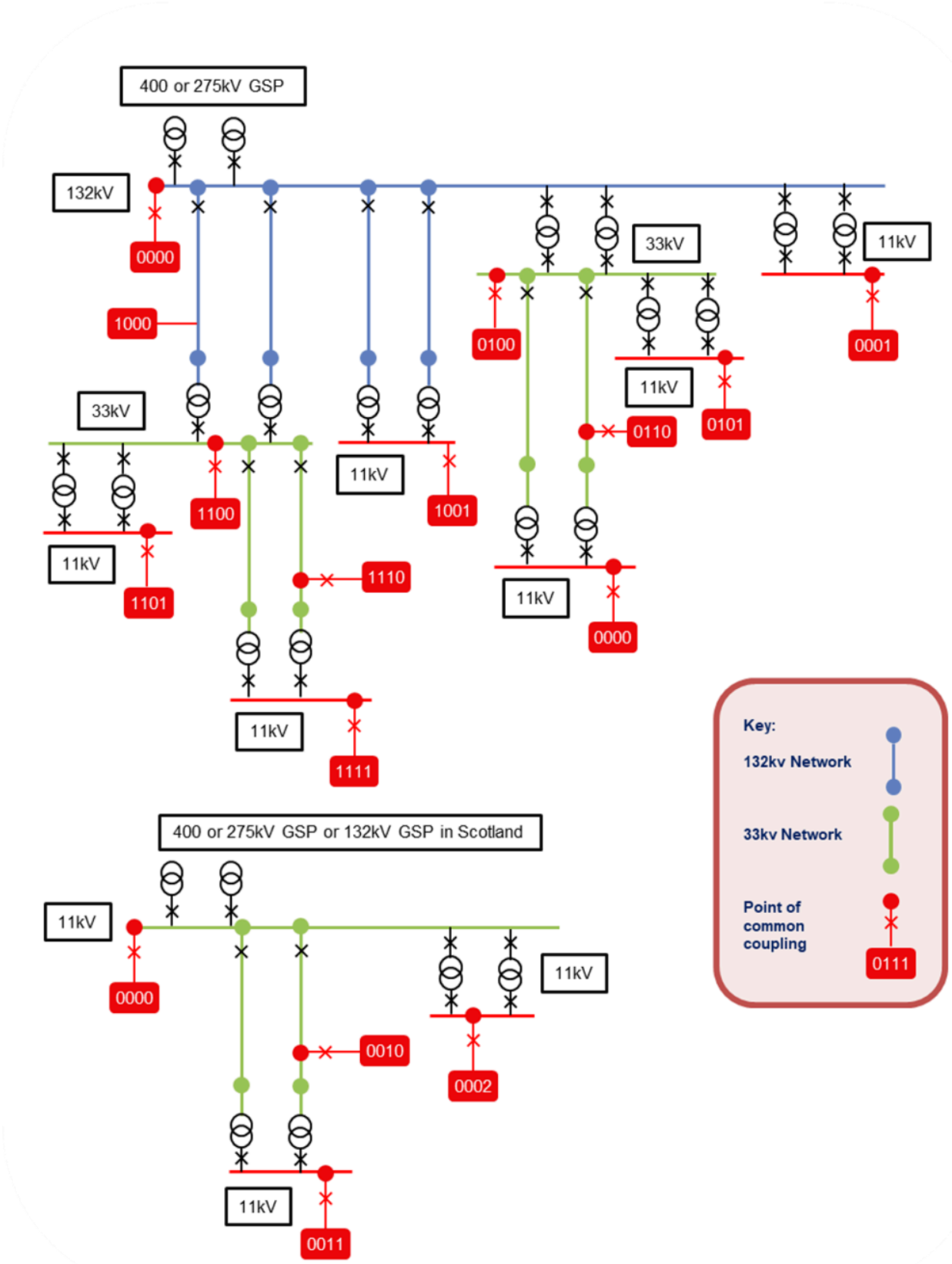

15.9 The use of each network level by each EDCM Connectee is determined according the rules set out in table 15.9.

Table 15.9 Use of each network level by each EDCM Connectee

EDCM Customers in category	Level 1	Level 2	Level 3	Level 4	Level 5
Category 0000	Zero	Zero	Zero	Zero	Zero
Category 1000	Capacity kVA	Zero	Zero	Zero	Zero
Category 1100	Peak-time active kW	Capacity kVA	Zero	Zero	Zero
Category 0100	Zero	Capacity kVA	Zero	Zero	Zero
Category 1110	Peak-time active kW	Peak-time active kW	Capacity kVA	Zero	Zero
Category 0110	Zero	Peak-time active kW	Capacity kVA	Zero	Zero
Category 0010	Zero	Zero	Capacity kVA	Zero	Zero
Category 0001	Zero	Zero	Zero	Zero	Capacity kVA
Category 0002	Zero	Zero	Zero	Capacity kVA	Zero
Category 1001	Peak-time active kW	Zero	Zero	Zero	Capacity kVA
Category 0011	Zero	Zero	Peak-time active kW	Capacity kVA	Zero
Category 0111	Zero	Peak-time active kW	Peak-time active kW	Capacity kVA	Zero
Category 0101	Zero	Peak-time active kW	Zero	Capacity kVA	Zero
Category 1101	Peak-time active kW	Peak-time active kW	Zero	Capacity kVA	Zero
Category 1111	Peak-time active kW	Peak-time active kW	Peak-time active kW	Capacity kVA	Zero

15.10 Category 0000 Connectee are deemed not to use any network assets other than sole use assets.

15.11 An average network asset value per kVA (in £/kVA) is calculated in respect of each network level. The average network asset value for the network level of connection is based on the Maximum Import Capacity of the Connectee, and for network levels above on consumption at peak time.

Average network asset value for capacity at level L (£/kVA) = NARL* AE /(1 + DL)

Average network asset value for demand at level L (£/kVA) = NARL * D * LAF

Where:

NAR L is the network asset rate at level L in £/kW based on the 500 MW model.

DL is the Diversity Allowance from the level exit to the GSP group (from CDCM table 2611).

D is the peak time active power consumption in (kW/kVA). This is calculated as the historical peak-time kW divided by historical maximum kVA.

LAF is the loss adjustment factor to transmission from the CDCM for the network level relevant to the EDCM Customer category of that Connectee. See table 15.11 below for the correspondence between EDCM Customer categories and network levels.

AE is the active power equivalent of capacity adjusted to transmission (in kW/kVA). This is calculated by multiplying the power factor in the 500 MW model (0.95) by the loss adjustment factor to transmission for the network level relevant to that Connectee (as above).

Table 15.11 Customer category relevant network level for loss adjustment factors

Customer categories	Relevant network level for loss adjustment factors
0000	GSP (the loss adjustment factor is always 1 for this network level)
1000	132kV (level 1)
1100 and 0100	132kV/EHV (level 2)

1110, 0110 and 0010	EHV (level 3)
1111, 1101, 0101, 0111, 0011 and 0002	EHV/HV (level 4)
1001 and 0001	132kV/HV (level 5)

15.12 Again, separate site-specific asset values per kVA (in £/kVA) are calculated in respect of each network level. The asset value for the network level of connection is based on the Maximum Import Capacity of the Connectee, and for network levels above on consumption at peak time.

Site-specific asset value for capacity at level L (£/kVA) = NUL * Average network asset value for capacity at level L (£/kVA)

Notional asset value for demand at level L (£/kVA) = NUL * Average network asset value for demand at level L (£/kVA)

Where:

NUL is the network use factor for that Connectee at level L, representing the proportion of the average 500 MW model assets that the Connectee is deemed to use at that level. The methodology to calculate these network use factors is set out in Annex 2 of this Schedule.

Average notional asset value for capacity at level L is the voltage level average calculated as described earlier.

Average notional asset value for demand at level L is the voltage level average calculated as described earlier.

15.13 Network use factors for import charges of a mixed import-export site that is generation-dominated are set to default values. These default values are equal to the “collars” for each network level calculated as described in section on demand scaling. DNO Parties implementing the FCP methodology would use the rules set out in the LRIC methodology to determine whether a location is to be modelled as a generation site, and is therefore generation dominated.

15.14 The total value of the site-specific shared assets required to serve each Connectee is calculated according to the formula:

TNA = NAC + (NAD * (1 - (Hours in super-red for which not a customer/Annual hours in super-red))*(Days in year/(Days in year - Days for which not a customer))

Where:

TNA is the total site-specific network assets in £/kVA required to serve a Connectee.

NAC is the site-specific asset value in £/kVA for capacity for that Connectee aggregated across all levels.

NAD is the site-specific asset value in £/kVA for demand for that Connectee aggregated across all levels.

15.15 Total site-specific shared assets is the aggregate value (in £) of all site-specific shared assets for EDCM Connectees. This is calculated by multiplying TNA by the Maximum Import Capacity (adjusted, if necessary, for Connectees connected for part of the Charging Year), and then aggregating across all EDCM Connectees.

16. CALCULATION OF THE EDCM DEMAND REVENUE TARGET

16.1 A single contribution rate for network rates is calculated for all EDCM Connectees as follows:

16.2 This section describes the method used to calculate the EDCM demand revenue target.

16.3 The EDCM demand revenue target is the share of the DNO Party's Allowed Revenue less any revenue relating to recovery of the DNO Party's Supplier of Last Resort and Eligible Bad Debt pass-through costs (excluding transmission exit charges and net revenue from EDCM generation) that will be recovered from EDCM Connectees through import charges.

Network rates contribution rate (per cent) = NR / (Total site-specific shared assets + Total EDCM sole use assets + EHV assets + HV and LV network assets + HV and LV service model assets)

Where:

NR is the DNO Party's total expenditure on network rates.

Total site-specific shared assets is the aggregate value (in £) of all site-specific shared assets for EDCM Connectees.

Total EDCM sole use assets is the aggregate sole use asset MEAVs of all EDCM Connectees, excluding the value of sole use assets associated with exempt export capacity, adjusted for part-year connected Connectees.

EHV assets are the aggregate EHV assets in the CDCM model.

HV and LV network assets from the CDCM model.

HV and LV service model assets from the CDCM model.

16.4 A single contribution rate for direct operating costs is calculated for all EDCM Connectees as follows:

Direct operating costs contribution rate (per cent) = DOC / (Total site-specific shared assets + Total EDCM sole use assets + EHV assets + (HV and LV network assets + HV and LV service model assets) / 0.68)

Where:

DOC is the DNO Party's total expenditure on direct operating costs.

Total site-specific shared assets is the aggregate value (in £) of all site-specific shared assets for EDCM Connectees.

Total EDCM sole use assets is the aggregate sole use asset MEAVs of all EDCM Connectees, excluding the value of sole use assets associated with exempt export capacity, adjusted for part-year connected Connectees.

EHV assets are the aggregate EHV assets in the CDCM model.

HV and LV network assets from the CDCM model.

HV and LV service model assets from the CDCM model.

0.68 is the operating intensity factor.

16.5 A single contribution rate for indirect costs is calculated for all EDCM Connectees as follows:

Indirect costs contribution rate (per cent) = INDOC / (Total site-specific shared assets + Total EDCM sole use assets + EHV assets + (HV and LV network assets + HV and LV service model assets) / 0.68)

Where:

INDOC is the DNO Party's total expenditure on indirect costs.

Total site-specific shared assets is the aggregate value (in £) of all site-specific shared assets for EDCM Connectees.

Total EDCM sole use assets is the aggregate sole use asset MEAVs of all EDCM Connectees, excluding the value of sole use assets associated with exempt export capacity, adjusted for part-year connected Connectees.

EHV assets are the aggregate EHV assets in the CDCM model.

HV and LV network assets from the CDCM model.

HV and LV service model assets from the CDCM model.

0.68 is the operating intensity factor.

16.6 Next, a residual revenue contribution rate is calculated as follows:

Residual revenue contribution rate (per cent) = (AR - DOC – INDOC – NR – GCN) / (Total site-specific shared assets + EHV assets + HV and LV network assets)

Where:

AR is the DNO Party's total Allowed Revenue excluding transmission exit charges in £/year and excluding any revenue relating to recovery of the DNO Party's Supplier of Last Resort and Eligible Bad Debt pass-through costs.

DOC is the DNO Party's total expenditure on direct operating costs.

INDOC is the DNO Party's total expenditure on indirect costs.

NR is the DNO Party's total expenditure on network rates.

GCN is the total forecast net revenue in £/year from the application of EDCM export charges, including the EDCM generation fixed charge. This amount is estimated by applying the calculated EDCM export charges rounded to the relevant number of decimal points.

Total site-specific shared assets is the aggregate value (in £) of all site-specific shared assets for EDCM Connectees.

EHV assets are the aggregate EHV assets in the CDCM model.

HV and LV network assets from the CDCM model.

16.7 The contribution rates for network rates, direct costs, indirect costs and residual revenue is converted into a £/year import capacity based contribution and a demand sole use asset MEAV based contribution for each

EDCM Connectee.

Import capacity based network rates contribution for each Connectee = TNA * NR rate * import capacity

Import capacity based direct operating costs contribution for each Connectee = TNA * DOC rate * import capacity

Import capacity based indirect costs contribution for each Connectee = TNA * INDOC rate * import capacity

Import capacity based residual revenue contribution for each Connectee = TNA * residual revenue rate * import capacity

Where:

TNA is the total site-specific assets (£/kVA) for that EDCM Connectee.

NR rate is the network rates contribution rate in per cent.

DOC rate is the direct operating costs contribution rate in per cent.

INDOC rate is the indirect costs contribution rate in per cent.

Residual revenue rate is the residual revenue contribution rate in per cent.

Import capacity is the Maximum Import Capacity (adjusted, if necessary, if the Connectee is connected for part of the Charging Year) in kVA for that EDCM Connectee.

16.8 The demand sole use asset MEAV based contribution in £/year is calculated as follows:

Demand sole use asset based network rates contribution = S * NR rate

Demand sole use asset based direct operating costs contribution = S * DOC rate

Demand sole use asset based indirect costs contribution = S * INDOC rate

Where

S is the MEAV of demand sole use assets of that EDCM Connectee (adjusted for Connectees connected for part of the Charging Year).

NR rate is the network rates contribution rate in per cent.

DOC rate is the direct operating costs contribution rate in per cent.

INDOC rate is the indirect costs contribution rate in per cent.

16.9 The target contributions from import capacity and demand sole use assets are aggregated across all EDCM Connectees.

16.10 The aggregate EDCM demand revenue target is calculated as the sum, across all EDCM demand, of the contributions based on import capacities and demand sole use assets, less the total reduction in fixed charges made to EDCM customers under paragraph 17.2. Such fixed charge reduction is to be derived as follows:

FCR = OMR * (EHV assets + HV and LV network assets) / (Total site-specific shared assets + EHV assets + HV and LV network assets)

Where

OMR is the total reduction in fixed charges made to EDCM customers under paragraph 17.2, where the reduction is derived as the aggregated value of the amount each EDCM customer would have paid under paragraph 17.1 less the amount paid under 17.2 for eligible customers.

17. FIXED CHARGES FOR IMPORT AND EXPORT

17.1 The contribution rates for network rates and direct operating costs are converted into a p/day fixed charge for the sole use assets of each EDCM Connectee as follows:

Import fixed charge on sole use assets in p/day = 100 / DC *SD* (NR contribution rate + DOC contribution rate)

Export fixed charge on sole use assets in p/day = 100 / DC *SG* (NR contribution rate + DOC contribution rate)

Where

DC is the number of days in the Charging Year.

SD is the MEAV of sole use assets allocated to demand of that EDCM Connectee.

SG is the MEAV of sole use assets allocated to generation of that EDCM Connectee excluding the value of sole use assets associated with exempt export capacity.

NR contribution rate is the network rates contribution rate in per cent.

DOC contribution rate is the direct operating costs contribution rate in per cent.

17.2 Where a customer demonstrates with written evidence to the DNO Party (or where the DNO Party has written evidence) that the customer (or its predecessors) made a capitalised O&M payment in respect of a connection to the DNO Party's network, and the period over which the O&M payment was capitalised remains unexpired, then the import fixed charge will be calculated as set out below (and the calculation for the import fixed charge in paragraph 17.1 will not apply).

The sole use assets will be split between those where capitalised O&M has been paid and those where it has not, and the fixed charge will be derived as follows:

p/day = (((DOC rate + NR rate) * SUA MEAVU) + (NR rate * SUA MEAVP)) / (days in Charging Year) * 100

Where:

DOC rate is the direct operating costs contribution rate in per cent;

NR rate is the network rates contribution rate in per cent;

Where SUA MEAVU is the Modern Equivalent Asset Value of Sole Use Assets where capitalised O&M has not been paid (or the period over which it was to be capitalised has expired); and

SUA MEAVP is the Modern Equivalent Asset Value of Sole Use Assets where capitalised O&M has been paid (and the period over which it was to be capitalised has not expired).

17.3 For customers that are classified as exempt pre-2005 EDCM Distributed Generators (DGs), it is deemed for the purposes of paragraph 17.2 that the customer paid capitalised O&M to be capitalised over a period of 25 years from connection.

18. DEMAND SCALING

18.1 Demand scaling is the process by which import charges to EDCM Connectees are set so that the forecast notional recovery from the application of those import charges to EDCM Connectees matches the EDCM demand revenue target.

18.2 Demand scaling using the site-specific assets approach involves the following steps:

- Calculating adjusted site-specific shared asset values for each Connectee using network use factors that have been subjected to a cap and collar.
- Allocation of the direct operating cost and network rates elements in the EDCM demand revenue target to individual EDCM Connectees on the basis of adjusted site-specific assets and sole use assets. [a]
- Allocation of the indirect cost element in the EDCM demand revenue target to individual EDCM Connectees on the basis of their consumption at the time of the DNO Party's peak and 50 per cent of Maximum Import Capacity as a p/kVA/day charge. [b]
- Forecasting the notional recoveries from the application of FCP charges to EDCM Connectee. [c]
- Application of residual charges is provided for in accordance with paragraph 18.18 below.

18.3 Adjusted site-specific assets are calculated using network use factors that have been subjected to caps and collars.

18.4 A cap and a collar are calculated for each network level as follows:

- In ascending order, list the network use factors for all EDCM Connectees in all DNO Party areas relating to that network level, excluding all the factors that are either equal to zero or 1, or not used, based on the customer categories of each EDCM Connectee.
- Divide the list into two segments, one that contains factors that are lower than 1, and the other than contains the factors that are higher than 1.
- Take the list segment containing factors that are lower than 1. Starting from the lowest factor in this list segment, calculate the factor at the 15th percentile. This is the collar.
- Take the list segment containing factors higher than 1. Starting from the lowest factor in this segment, calculate the factor at the 85th percentile. This is the cap.

18.5 The same cap and collar would apply in all DNO Party areas to network use factors at that network level.

18.6 These caps and collars are recalculated triennially, with the three year cycle having being established when caps and collars were calculated when determining 2017/18 charges (in 2015). In years where a recalculation has not been carried out, the values used remain at the most recently calculated values.

18.7 Where year t is a charging year for which the caps and collars are being recalculated, the caps and collars calculated and used for years t, t+1 and t+2 will be based on applying the calculation detailed in paragraph 18.4 to the average of network use factors which were used in the calculation of charges applicable to years t-3, t-2 and t1.

18.8 The network use factor caps and collars that are updated in accordance with paragraphs 18.6 and 18.7 will be maintained by the DNO Parties and referenced within the EDCM user manual.

18.9 Separate adjusted site-specific asset values per kVA (in £/kVA) is calculated in respect of each network level. The asset value for the network level of connection is based on the Maximum Import Capacity of the EDCM Connectee, and for network levels above on consumption at peak time.

Adjusted site-specific asset value for capacity at level L (£/kVA) = NUaL * Average network asset value for capacity at level L (£/kVA)

Adjusted site-specific asset value for demand at level L (£/kVA) = NUaL * Average network asset value for demand at level L (£/kVA)

Where:

NUaL is the adjusted network use factor for that EDCM Connectee at level L after application of the cap and collar.

Average notional asset value for capacity at level L is the voltage level average calculated as described earlier.

Average notional asset value for demand at level L is the voltage level average calculated as described earlier.

18.10 The total value of the adjusted site-specific shared assets required to serve each EDCM Connectee is calculated according to the formula:

TNAa = NACa + (NADa * (1 - (Hours in super-red for which not a customer/Annual hours in super-red))* (Days in year / (Days in year - Days for which not a customer)))

Where:

TNAa is the total adjusted site-specific network assets in £/kVA required to serve a EDCM Connectee.

NACa is the adjusted site-specific asset value in £/kVA for capacity for that EDCM Connectee aggregated across all levels.

NADa is the adjusted site-specific asset value in £/kVA for demand for that EDCM Connectee aggregated across all levels.

18.11 Total adjusted site-specific shared assets for all EDCM demand is the aggregate value (in £) of all adjusted site-specific shared assets for EDCM Connectees. This is calculated by multiplying TNAa by the Maximum Import Capacity (adjusted, if necessary, for Connectees connected for part of the Charging Year), and then aggregating across all EDCM demand.

18.12 The direct cost and network rates allocations to individual demand Connectees is determined in the same way as the contributions to the EDCM demand revenue target was calculated, except that adjusted site-specific assets are used.

18.13 A single asset based charging rate for network rates is calculated for all EDCM Connectee. This is calculated as follows:

Network rates charging rate (per cent) = EDCM NR contribution / (Total adjusted site-specific shared assets)

Where:

EDCM NR contribution is the sum of the import capacity based network rates contribution from each EDCM Connectee.

Total adjusted site-specific shared assets is the aggregate value (in £) of all adjusted site-specific shared assets for EDCM Connectees.

18.14 A single asset based charging rate for direct operating costs is calculated for all EDCM Connectees. This is calculated as follows:

Direct operating costs charging rate (per cent) = EDCM DOC contribution / (Total adjusted site-specific shared assets)

Where:

EDCM DOC contribution is the sum of the import capacity based direct costs contribution from each EDCM Connectee.

Total adjusted site-specific shared assets is the aggregate value (in £) of all adjusted site-specific shared assets for EDCM Connectees.

18.15 The charging rates for network rates and direct operating costs are converted into p/kVA/day import capacity based charges for each EDCM Connectee.

Network rates and direct costs charge in p/kVA/day = (100 / DC) * TNAa * (NR rate + DOC rate)

Where:

DC is the number of days in the Charging Year.

TNAa is the total adjusted site-specific assets (£/kVA) for that EDCM Connectee.

NR rate is the network rates charge rate in per cent.

DOC rate is the direct operating costs charge rate in per cent.

18.16 A p/kVA/day charging rate for indirect costs for each EDCM Connectee is calculated on the basis of historical demand at the time of the DNO Party's peak and 50 per cent of Maximum Import Capacity of that Connectee.

Indirect cost charging rate in p/kVA/day = 100 / DC * (Aggregate indirect cost contribution) / Volume for scaling

Where:

DC is the number of days in the Charging Year.

Volume for scaling is calculated as the sum of (0.5 + coincidence factor)* import capacity * LDNO factor across all EDCM Connectees.

Coincidence factor is calculated as the forecast peak-time consumption in kW divided by Maximum Import Capacity in kVA of that Connectee (based on historical data) multiplied by (1 - (Hours in super-red for which not a customer/Annual hours in super-red))*(Days in year/(Days in year - Days for which not a customer))

Import capacity is the Maximum Import Capacity (adjusted if the Connectee is connected for part of the Charging Year) in kVA for that EDCM Connectee.

LDNO factor takes the value 0.5 if the EDCM Connectee is connected to a LDNO's network and 1 otherwise.

Aggregate indirect cost contribution is the sum of the import capacity based and sole use asset based indirect cost contribution from each EDCM Connectee.

18.17 The p/kVA/day charging rate for indirect costs is converted into an import capacity based charge for each EDCM Connectee as follows:

Import capacity based INDOC charge in p/kVA/day = Indirect cost charging rate * (0.5 + coincidence factor) * LDNO factor

Where:

Indirect cost charging rate is the Distribution System-wide p/kVA/day rate calculated as described in the previous paragraph.

Coincidence factor is calculated as the forecast peak-time consumption in kW divided by Maximum Import Capacity in kVA of that Connectee (based on historical data) multiplied by (1 - (Hours in super-red for which not a customer/Annual hours in super-red))*(Days in year/(Days in year - Days for which not a customer))

LDNO factor takes the value 0.5 if the EDCM Connectee is connected to a LDNO's network and 1 otherwise.

18.18 Residual charges will be allocated as follows:

- The difference between the EDCM demand revenue target and the sum of a, b and c under Paragraph 18.2 above will be apportioned to specific charging bands as set out in paragraph 2.4 of Schedule 32, according to the total forecast metered import consumption for the charging band proportionate to the total forecast metered import consumption for all Final Demand Sites which are EHV Designated Properties.
- The allocated proportion of the residual value to each charging band will then be divided equally among all Final Demand Sites within that charging band, resulting in the same level of residual fixed charge for each such site.
- Residual charges for each Final Demand Site will be applied as a fixed charge adder (p/Final Demand Site/day) calculated as follows: the revenue surplus or shortfall (in pence) to be returned or recovered for the band that the Final Demand Site is in; divided by the total number of Final Demand Sites in that band; divided by days in the charging year.
- For any DNO Party, if the count of Final Demand Sites in any given charging band is less than two in the charging year for which tariffs are being determined, the residual fixed charge for that band will be calculated as set out in accordance with the bullet points above, but the total forecast metered import consumption and total count of Final Demand Sites in that band will be combined with the equivalent information for the band above that band. If the band in question is the highest band, then it will be combined with the equivalent information for the band below that band. The residual fixed charge should therefore be the same for all Final Demand Sites in the combined bands. There must be no single or combined band with less than two Final Demand Sites within that band. A Final Demand Site connected

during the year will be counted as a fraction based on the proportion of the year for which the site was connected.

- There are eight possible combinations for grouping non-domestic charging bands under the above bullet point. Where there are less than two Final Demand Sites in a band the grouping of the bands under the above bullet point will be in accordance with the preference order given in the table below.

Preference order for band grouping combinations	**Band 1**	**Band 2**	**Band 3**	**Band 4**
First	1	2	3	4
Second	1 + 2		3	4
Third	1	2 + 3		4
Fourth	1	2	3 + 4	
Fifth		1 + 2		3 + 4
Sixth	1 + 2 + 3			4
Seventh	1	2 + 3 + 4		
Eighth	1 + 2 + 3 + 4			

- In all cases, residual fixed charge component will be added to the fixed charge component to create a single fixed charge.

18.19 Not Used.

18.20 Not Used.

18.21 Not Used.

18.21.A The fixed adder for a Non-Final Demand Site shall be zero.

19. APPLICATION OF EDCM DEMAND FOR EDCM CONNECTEES

19.1 The tariff application rules for the EDCM are the same as for the CDCM wherever possible. Each component of each tariff is rounded to the nearest value with no more than three decimal places in the case of unit rates expressed in p/kWh, and with no more than two decimal places in the case of fixed and capacity charges expressed in p/day and p/kVA/day respectively.

19.2 The part of EDCM portfolio tariffs (for LDNO networks and Distribution Licence exempt networks) that is based on CDCM tariffs will be billed like CDCM tariffs.

19.3 Final EDCM demand charges will have:

1. an import fixed charge (in p/day)
2. an import capacity charge (in p/kVA/day)
3. an import super-red unit rate charge (in p/kWh)
4. an exceeded import capacity charge (in p/kVA/day).

19.4 The import fixed charge for each EDCM Connectee in p/day would be calculated as follows:

EDCM import fixed charge (p/day) = [FCP fixed charge on sole use assets in p/day] + [residual fixed charge in p/day].

19.5 The final EDCM import capacity charge for each EDCM Connectee in p/kVA/day would be calculated as follows:

EDCM import capacity charge (p/kVA/day) = [FCP p/kVA/day capacity charge] + [Transmission exit charge

p/kVA/day] + [Network rates and direct costs charge in p/kVA/day] + [Indirect costs charge in p/kVA/day]

19.6 The final EDCM super-red unit rate in p/kWh is the FCP super-red unit rate as calculated as described earlier in this document.

19.7 If the EDCM import capacity charge (p/kVA/day) calculated above is negative and the Connectee's average kW/kVA (adjusted for part year) is not equal to zero, the final EDCM super-red unit rate is adjusted as follows:

Adjusted FCP super-red unit rate in p/kWh = [FCP super-red rate in p/kWh] + ([EDCM import capacity charge (p/kVA/day)] * ([Days in the Charging Year] - [Days for which not a customer]) / [Average kW/kVA] / ([hours in the super-red time band] - [Hours in super-red for which not a customer]))

19.8 Finally, any remaining negative import super-red unit rates or import capacity charges are set to zero.

19.9 Final EDCM export charges will have:

1. An export fixed charge on sole use assets (in p/day)
2. An export capacity charge (in p/kVA/day), which might include transmission exit credits to qualifying generators.
3. An export super-red unit rate (in p/kWh)
4. An exceeded export capacity charge (in p/kVA/day)

19.10 The export capacity charge (in p/kVA/day) is applied to the Chargeable Export Capacity of EDCM Connectees.

19.11 The export super-red unit rate (in p/kWh) is applied to active power units exported during the DNO Party's super-red time band.

20. EXCEEDED CAPACITY CHARGES

20.1 Where a Connectee uses additional capacity over and above the Maximum Import Capacity or Maximum Export Capacity without authorisation, the excess is classed as exceeded capacity.

20.2 For the purposes of determining capacity used, the following formula is used for each half hour:

Import capacity used = 2 * (SQRT(AI^2 + MAX(RI,RE)^2))

Where:

AI = Import consumption in kWh

RI = Reactive import in kVArh

RE = Reactive export in kVArh

Export capacity used = 2 * (SQRT(AE^2 + MAX(RI,RE)^2))

Where:

AE = Export production in kWh

RI = Reactive import in kVArh

RE = Reactive export in kVArh

20.3 For the purposes of calculating exceeded capacity for import charges, any reactive flows during half hours when there is no active power import would not be taken into account.

20.4 For the purposes of calculating exceeded capacity for export charges, any reactive flows during half hours when there is no active power export will not be taken into account.

20.5 Any reactive flows associated with a site which operates subject to grid code requirements for generation or sites providing voltage control at the request of the DNO Party would not be taken into account when calculating import or export capacity used.

20.6 For Connectees other than those that have an agreement with the DNO, the terms of which require them, for the purposes of P2/6 compliance, to export power during supergrid transformer (SGT) outage conditions, the exceeded portion of the export capacity is charged at the same rate as the capacity that is within the Maximum Export Capacity. This is charged for the duration of the month in which the breach occurs.

20.7 For Connectees other than those with DSM agreements, the exceeded portion of the import capacity is charged at the same rate as the capacity that is within the Maximum Import Capacity. This is charged for the duration of the month in which the breach occurs.

20.8 Sites subject to DSM arrangements would normally pay the DSM-adjusted capacity charge for capacity usage up to their Maximum Import Capacities.

20.9 If sites with DSM agreements were to exceed their maximum import capacities, the exceeded portion of the capacity will be charged at a different rate. This will be charged for the duration of the month in which the breach occurs. This charge for exceeded capacity (in p/kVA/day) would be determined as follows;

[Exceeded capacity charge in p/kVA/day] = [Import capacity charge p/kVA/day] + (([FCP capacity charge p/kVA/day] + ([FCP super-red rate p/kWh] * [Average kW/kVA adjusted for part year] * [number of super-red hours connected] / ([days in Charging Year] – [Days for which not a customer]))) * (1 - ([chargeable capacity]/ [Maximum Import Capacity]))

Where:

The FCP super-red unit rate and FCP capacity charges in the equation above are the charges before any adjustments for DSM have been made.

21. APPLICATION OF EDCM IMPORT CHARGE COMPONENTS

21.1 Table 21.1 summarises the method of application of import charge components.

Table 21.1 Application of EDCM import charge components

Tariff component	Unit	Application
Import fixed charge	p/day	Applied as a fixed charge.
Import capacity charge	p/kVA/day	Applied to the Maximum Import Capacity.
Exceeded import capacity charge	p/kVA/day	Applied to exceeded capacity for the duration of the month in which the breach occurs (except for sites which operates subject to grid code requirements for generation)
Import super-red unit rate	p/kWh	Applied to active power units consumed during the DNO Party's super-red time band.

21.2 Table 21.2 summarises the method of application of export charge components.

Table 21.2 Application of EDCM export charge components

Tariff component	Unit	Application
Export fixed charge	p/day	Applied as a fixed charge.
Export capacity charge	p/kVA/day	Applied to the Chargeable Export Capacity.
Exceeded export capacity charge	p/kVA/day	Applied to exceeded capacity for the duration of the month in which the breach occurs (except for sites which operates subject to grid code requirements for generation)
Export super-red unit rate	p/kWh	Applied to active power units exported during the DNO Party's super-red time band.

22. CHARGES FOR NEW CONNECTEES

22.1 New Connectees could connect at any time between the publication of EDCM charges for the new Charging Year and the end of that Charging Year.

22.2 If the connection of such Connectees had been anticipated before the publication of charges, the DNO Party would have included forecast data relating to the new Connectee in both the power flow model and the EDCM tariff model. The resulting tariff is applied to the new Connectee, on a pro-rata basis if the price is produced during the Charging Year.

22.3 If prices need to be produced for new connections that had not been anticipated at the time of calculating EDCM charges for that Charging Year, the DNO Party will:

- Seek indicative load profile information from the new Connectee, failing that, make a reasonable estimate;
- Run the power flow model after including the new Connectee to produce a full set of charges 1 and 2, including for the new Connectee;
- Include the new Connectee's details, including marginal charges from (a) in the EDCM tariff model, to produce a full set of new charges;
- Use the tariff relating to the new Connectee to calculate charges; and
- Charges relating to the current year for existing Connectees would not change as a result.

22.4 If a Connectee were to change their maximum import or export capacity at any time between the publication of EDCM charges for the Charging Year and the end of the Charging Year, the published tariff rates would continue to apply for the duration of the Charging Year.

23. DNO TO DNO CHARGES

23.1 In the case of DNO Party to DNO Party interconnections, the interconnections are categorised into four types:

a. The interconnector between the DNO Parties is normally closed (active), and there is an identifiable benefit from the existence of the interconnection to one DNO Party only. The other DNO Party does not benefit from the interconnection.

b. The interconnector is normally closed (active), and there is either an identifiable benefit to both DNO Parties, or no clear benefit to either DNO Party.

c. The interconnector is normally open, and the interconnection exists only to provide backup under certain conditions to either DNO Party.

d. All other interconnections between DNO Parties.

23.2 In all cases of type (a), the benefitting DNO Party will be treated as being equivalent to an EDCM Connectee connected to the other DNO Party's network. The DNO Party providing the benefit will calculate and apply EDCM import charges, except charges for sole use assets, as applicable to the other DNO Party. Export charges or credits will not apply.

23.3 In the case of type (b) interconnections, each DNO Party will treat the other as an EDCM Connectee. Normal EDCM import charges, except charges for sole use assets, will apply. Export charges or credits will not apply.

23.4 Type (c) interconnections are typically covered by special arrangements between DNO Parties. Use of system charges are agreed between DNO Parties and applied outside the EDCM model.

23.5 In every other case, each DNO Party applies import charges to the other as a normal EDCM Connectee, as with type (b) interconnections.

24. LDNO CHARGING

24.1 LDNOs with Distribution Systems that serve Connectees that fall within the scope of the CDCM would have their charges based on standard discount percentages applied to the CDCM all-the-way end user charges.

A LDNO with a Distribution System that qualifies as a CDCM “Designated Property” according to the definition set out in condition 13A.6 of the Distribution Licence is eligible for portfolio discounts calculated using the price control disaggregation model provided for under Schedule 29, with any subsequent adjustment applied in respect of the DNO Party's Supplier of Last Resort and Eligible Bad Debt pass-through costs as described in paragraphs 100 to 104 of the CDCM.

A LDNO with a Distribution System that qualifies as an EDCM “Designated EHV Property” according to the definition set out in condition 13B.6 of the Distribution Licence is eligible for discounts calculated using the price control disaggregation model provided for under Schedule 29, with any subsequent adjustment applied in respect of the DNO Party's Supplier of Last Resort and Eligible Bad Debt passthrough costs as described in paragraphs 100 to 104 of the CDCM.

24.2 A LDNO with a Distribution System that qualifies as an EDCM “Designated EHV Property” could itself have Connectees who would fall under the scope of the EDCM. Since the EDCM is a locational charging method, the host DNO Party would calculate EDCM charges at the DNO Party’s boundary for each EDCM-like Connectee on the LDNO’s Distribution System. No discounts are calculated for such EDCM Connectees as the DNO Party’s charges are based only on the specific site’s equivalent use of the DNO Party’s Distribution System.

25. CALCULATION OF LDNO DISCOUNTS

25.1 The discount percentages are determined in accordance with Schedule 29, which is deemed to form part of this EDCM (as if it were set our therein).

25.2 In each case, the discount is applied to all CDCM tariff components. Discount percentages are capped to 100 per cent.

25.3 Supplier of Last Resort pass-through costs are allocated by applying a fixed charge adder (p/day) to the following customer groups, as calculated under paragraph 102 of the CDCM:

- LDNO HVplus: Domestic Aggregated or CT;
- LDNO EHV: Domestic Aggregated or CT;
- LDNO 132kV/EHV: Domestic Aggregated or CT;
- LDNO 132kV: Domestic Aggregated or CT;
- LDNO 0000: Domestic Aggregated or CT.

25.4 Eligible Bad Debt pass-through costs are allocated by applying a fixed charge adder (p/day) to all metered demand tariffs excluding 'related MPAN' tariffs, as calculated under paragraph 103 of the CDCM.

25.5 Not used.

25.6 Not used.

25.7 Not used.

25.8 Not used.

25.9 Not used.

25.10 Not used.

25.11 Not used.

25.12 Not used.

25.13 Not used.

25.14 Not used.

25.15 Not used.

25.16 Not used.

25.17 Not used.

25.18 Not used.

25.19 Not used.

26. PORTFOLIO EDCM TARIFFS FOR CONNECTEES IN THE EDCM

26.1 For Connectees on a LDNO's Distribution System that would be covered by the EDCM if they were on the DNO Party's Distribution System, the EDCM is applied to calculate a portfolio EDCM charge/credit for each such Connectee.

26.2 These EDCM portfolio charges would be calculated as if each EDCM Connectee on the LDNO's Distribution System were notionally connected at the boundary between the DNO Party and the LDNO; except for LDNO UMS tariffs, which are charged by reference to the voltage of the Points of Connection that provide the majority of the energised domestic connections for the LDNO in the GSP Group (or, where there is no such

majority, on such other reasonable basis as the DNO Party determines). Both EDCM import and export charges will apply.

26.3 For the purposes of calculating the boundary-equivalent portfolio EDCM tariffs, each EDCM Connectee on the LDNO's Distribution System would be assigned the demand Connectee category determined by reference to that LDNO Distribution System's Point of Common Coupling. The demand Connectee category is assigned as per Table 15.6.

26.4 Such Connectees would attract charges (credits) in respect of any reinforcements caused (avoided) on the DNO Party's Distribution System only, i.e. any network Branches that are on the LDNO's Distribution System would be attributed a zero FCP charge/credit.

26.5 The setting of final charges to Embedded Designated EHV Properties including the calculation of charges for assets used on the LDNO's Distribution System will be established by the LDNO.

26.6 All EDCM charges would be calculated using "boundary equivalent" data provided by the LDNO to the host DNO Party for each Embedded Designated EHV Property. For the purposes of the EDCM, boundary equivalent data should be what the LDNO has allowed for at the DNO Party - LDNO boundary, for each EDCM Connectee, after taking into consideration the diversity and losses within the LDNO's Distribution System. Data relating to CDCM end users must be considered for the purposes of calculating boundary equivalent data in order to cater for the effect of diversity and losses.

26.7 The EDCM will include in the charges for Embedded Designated EHV Properties a fixed charge relating to any assets on the DNO Party's Distribution System that are for the sole use of a LDNO's Distribution System. The assets on the DNO Party's network that are for the sole use of a LDNO Distribution System are defined as the assets in which only consumption or output associated with Embedded customers on the LDNO Distribution System can directly alter the power flow in the asset, taking into consideration all possible credible running arrangements, i.e. all assets between the asset ownership boundary and the LDNO Distribution System's Point of Common Coupling are considered as sole use assets. These fixed charges would be calculated in the same way as it would be for EDCM Connectees connected directly to the host DNO Party's Distribution System.

26.8 In calculating charges for assets on the DNO Party's Distribution System that are for the sole use of a LDNO's Distribution System, DNO Parties will charge only for the proportion of sole use assets deemed to be used by Embedded Designated EHV Properties. This proportion will be calculated, in respect of each Embedded Designated EHV Properties, as the ratio of the boundary equivalent capacity of that Connectee to the capacity at the LDNO - DNO Party boundary.

26.9 If there are no Embedded Designated EHV Properties on the LDNO's Distribution System, no sole use asset charges would apply.

26.10 Demand scaling would be applied as normal to any EDCM portfolio tariff in respect of an EDCM Connectee. For the purposes of scaling, all EDCM Connectees connected to the LDNO's Distribution System will be treated as notional EDCM Connectees connected to the DNO Party's Distribution System with a Point of Common Coupling at the LDNO Distribution System's Point of Common Coupling.

26.11 For EDCM Connectees connected to the LDNO's Distribution System, the capacity-based charge for the DNO Party's indirect costs and 20% of the residual fixed charge for the EDCM Connectee, would be scaled down by a factor of 50 per cent, however, the scaling down will not apply where the residual revenue is negative.

27. OFFSHORE NETWORKS CHARGING

27.1 The DNO Party will treat offshore networks connected to the DNO Party as if they were EDCM Connectees.

27.2 The DNO Party will apply the EDCM to calculate an import and export charge based on capacity at the boundary and power flow data metered at the boundary.

27.3 Any sole use assets specific to the offshore network are charged as a p/day sole use asset charge calculated as applicable to a normal EDCM Connectee.

27.4 Demand scaling will also be applied.

28. DNO PARTY TO UNLICENSED NETWORKS

28.1 Unlicensed networks have a choice. If they are part of the Total System under the Balancing and Settlement Code with the network open to supply competition, and if they are party to the DCUSA, and have accepted the obligations to provide the necessary data, they can, if they wish, be treated as LDNOs.

28.2 Otherwise, the DNO Party applies the EDCM to calculate an import and export charge based on capacity and power flow data metered at the boundary. Any sole use assets specific to the unlicensed network are charged as a p/day sole use asset charge calculated as applicable to a normal EDCM Connectee.

29. DERIVATION OF 'NETWORK USE FACTORS'

Step 1

29.1 Powerflow analysis is used to determine the change in powerflow in each Branch (in MW) that is caused by a change in load (in MW) at each node in the EHV network model, that represents either EDCM demand or CDCM demand at the EHV/HV boundary.

29.2 In essence, a change in load of X MW is applied at the node under consideration and changes in powerflow in each network Branch are identified. If the change in powerflow in a particular Branch is Y MW, as a result in the change in load at the node under consideration, then the 'Change In Branch Flow per Change In Demand' is given by:-

Abs (Y/X) (MW Branch flow per MW of demand at node)

29.3 The effects of a change in demand at each node, upon the powerflows in Branches, are evaluated for each node in turn.

29.4 The method of evaluating the 'Change in Branch Flow per Change in Demand' shall be the Incremental Method, described below:

30. INCREMENTAL METHOD:

30.1 Establish the 'base case' powerflow in each Branch using a network model constructed with demand data used to represent the Maximum Demand Scenario analysed in the marginal cost calculation, using Maximum Demand Data that represents the regulatory year that use of system charges are being calculated for.

30.2 Apply a 0.1MW (at 0.95 lagging p.f.) increment to each node, in turn, in the EHV network model (at nodes that represent either an EDCM Connectee or CDCM demand at the EHV/HV boundary) and identify the change in powerflow (in MW) in all Branches where the change exceeds both 1kVA and 0.01% of the 'base case' powerflow in the Branch. The change in Branch flow corresponding to a 0.1MW increment at a node can be evaluated by actual application of an increment to the network model, or through the use of sensitivity coefficients. Prior to the application of the increment all the transformer tap positions, distributed generation outputs and switched shunt values are fixed to the values determined in the 'base case' powerflow to prevent change in their values when analysing the power flows with the increment applied.

30.3 This calculation is performed upon the Authorised Network Model and only considers normal running arrangements.

Step 2:

30.4 The 'MW usage' of each Branch by a given nodal demand is determined by multiplying the relevant value of 'Change In Branch Flow per Change In Demand' (derived in step 1) by the demand at the node (MW) as used in the Maximum Demand Scenario for the marginal cost calculation, using the Maximum Demand Data that represents the regulatory year that use of system charges are being calculated for. This will always be a positive quantity.

Step 3:

30.5 For each Branch, the 'total MW usage' of the Branch by all nodal demands is determined by summating the 'MW usage of the Branch' by each node (as determined in step 2).

Step 4:

30.6 Each nodal demand's proportionate usage of a Branch is determined using the equation below:

Alloc (£/year) = ([MW usage] / [Total MW usage]) * (Abs [Max contingency flow] / [Rating]) * AMEAV

If the Branch is "generation-dominated", or (2 * Abs [Base flow load]) ≤ Abs ([Base flow] - [Base flow load]), then use:

Alloc (£/year) = ([MW usage] / [Total MW usage]) * (Abs [Max contingency flow] / [Rating]) * Abs ([Base flow load] / [Base flow]) * AMEAV

Where:

- Alloc is the allocation of the AMEAV of the asset to a demand user in £/year
- MW usage is the absolute value of the "MW usage" of the asset attributable to that demand user (expressed in MW)
- Total MW usage is the sum of the absolute values of the "MW usage" of all demand users of that asset (expressed in MW)
- Max contingency flow is the maximum post-contingent flow through the asset in MVA. The maximum post-contingency asset flows may be extracted from the 'locational' analyses.
- Rating is the unadjusted rated capacity of the asset in MVA
- Base flow load is the algebraic sum of power flows through the Branch due to demand only in MW.
- Base flow is the aggregate power flow through the Branch under normal network operation in MW.
- AMEAV is the annualised modern equivalent asset value in £/year of that asset.
- The ratio ([Max contingency flow] / [Rating]) is called the asset utilisation factor and it is capped at 1.

The quantity (Abs [Max contingency flow] / [Rating]) * Abs ([Base flow load] / [Base flow]) is called the load utilisation factor.

30.7 Sole use assets are not to be included in the calculation of the MEAV of the Branches and consequently some Branches may have an MEAV of zero.

Step 5:

30.8 For each node, the £/annum 'usage' of Branches (calculated in Step 4) of the same voltage level, by the demand at the node, are summated to create a total £/annum for each voltage level for the nodal demand. The considered voltage levels correspond to those used in the CDCM and include voltage levels that represent transformation between two voltages. These voltage levels are '132kV', '132kV/EHV', 'EHV', 'EHV/HV' and '132kV/HV'.

30.9 For each node where EDCM demand is present, the total £/annum 'usage' of Branches of each voltage level, for the node, is divided by the demand at the node (in kW), as used in the Maximum Demand Scenario, to create a £/kW/annum total usage of Branches at each voltage level by the particular node. This shall be the numerator in the network use factor, for a particular voltage level, for the EDCM demand node.

30.10 For all nodes where CDCM demand is present, and the CDCM demand is considered to be 'dominant' at the node (CDCM demand shall be considered to be 'dominant' where the DNO Party estimates that the maximum demand associated with all CDCM demand at the node exceeds the maximum demand associated with all EDCM demand at the node), the £/annum 'usages' of Branches at each voltage level (calculated in Step 4) are summated to create a total £/annum 'usage' for all CDCM dominated nodes. The CDCM demand 'using' each voltage level is determined by summating the nodal demands of all CDCM dominated nodes that have non zero £/annum 'usages' at the particular voltage level. The average £/kW/annum network usage by CDCM dominated nodes is derived for each voltage level by dividing the total £/annum usage (at the voltage level by CDCM dominated nodes) by the total CDCM demand 'using' the voltage level. This provides the denominators used for the network use factors.

30.11 The network use factor, at each voltage level, for each node where EDCM demand is present therefore is the £/kW/annum for the nodal demand at the appropriate voltage level, divided by the corresponding average £/kW/annum for the same voltage level determined for CDCM dominated nodes.

Annex 1 - Implementation Guide

SCHEDULE 17 - EHV CHARGING METHODOLOGY (FCP MODEL)

1. SCOPE

1.1 This Annex describes the definitions, input data and power flow analyses required for modelling the DNO Party's Distribution System to enable the FCP methodology to be implemented as set out in the EDCM. The output data are also described.

2. POWER SYSTEMS ANALYSIS

2.1 The DNO Parties routinely analyse their Distribution Systems using power system analysis tools to identify where limitations exist on the network; this information is used to plan reinforcements.

2.2 Planning of a Distribution System (to satisfy the requirements of the Act and the Distribution Licences) using a power system analysis tool requires the development of a network model which represents the actual Distribution System and the application of demand data that represent the demands that the Distribution System will be required to deliver whilst satisfying the nationally defined security standard, ER P2/6.

2.3 The aim of using power flow analysis for pricing purposes is to replicate the reinforcement assessment process and determine the costs of future network reinforcements in order to generate cost-reflective incremental charges.

2.4 The DNO Parties use a variety of software tools to model their respective Distribution Systems for the purposes of operating and planning Distribution Systems. The Authority and the DNO Parties have agreed that it is not appropriate to prescribe which software tool is used for the analysis of the Distribution System, as it is for each DNO Party to satisfy itself that it is using the appropriate tools for planning and operation of its Distribution System.

2.5 The following sections describe the definitions, input data and the power flow analyses required to model the Distribution System for pricing purposes. The calculation of reinforcement costs and the main outputs are discussed.

3. DEFINITIONS

In this Schedule 17, unless the context otherwise requires, the expressions below shall have the meanings set out below.

Term	Definition
Active Power	The product of the voltage, current and cosine of the phase angle between them, measured in watts.
Allowed Revenue	The amount of revenue that the DNO Party can earn on its regulated business in accordance the special conditions within the DNO Party's Distribution Licence.
Authorised Network Model	The model that represents the DNO Party's entire EHV network (from the GSP level down to and including the HV busbar at the EHV/HV transformation level), as described in Paragraph 2.3 and section 4 of this Annex 1.

Branch	A representation of an asset, collection of assets or part of an asset of the DNO Party's EHV network through which Active Power flows as a consequence of supply to or export from a Connectee or busbar on the DNO Party's HV or EHV networks. A Branch must only be connected between two Nodes. A Branch should conform to the following: • there can be more than one Branch between the same two Nodes; • a three winding transformer may be represented by three Branches (one Branch for each of the windings) configured in a star formation; • the Active Power flowing out of one end of a Branch should equal the Active Power flowing into the other end of the Branch less any losses within the Branch; • shunt reactors and capacitors are not Branches; • earthing transformers, resistors and reactors are not Branches; and • a Branch may constitute a collection of assets e.g. a circuit constituting overhead lines and cables. When combining assets into a Branch, there is a need to consider the reinforcement solution for the Branch in the next stages for the Use of System Charging calculation.
Branch Rating	The Branch Ratings selected for the Authorised Network Model should be derived by appropriate consideration of the time of day / season / general nature of load profile (i.e. continuous, cyclic, etc.) represented within the model.
Bulk Supply Point (BSP)	A supply point on the DNO Party's Distribution System representing an EHV/EHV transformation level e.g. 132/33kV.
Charging Year	The financial year (12 month period ending on a 31st March) for which charges and credits are being calculated.
Circuit	The part of a Distribution System between two or more circuit breakers, switches and/or fuses inclusive. For the avoidance of doubt a circuit can contain a number of Branches and Nodes. A Circuit may include transformers, reactors, cables and overhead lines. Busbars are not considered as Circuits.
Circuit Branch	A categorisation used in the derivation of Branch reinforcement costs for Branches that represent an interconnection (or part of an interconnection) between substations and which operate at a single voltage level.
Connection Node	A Node which is a point of connection to one of the following: • an Entry Point or the Sole Use Assets connecting the Entry Point; or • an Exit Point or the Sole Use Assets connecting the Exit Point; or • the DNO Party's HV network; or • a Distribution System of another DNO Party or IDNO Party.
Contingency Analysis	The analysis to determine the effect on power flows for the Authorised Network Model under N-1 and where necessary, N-2 contingencies.
Diversity Allowance	The extent, expressed as a percentage, to which the sum of the maximum load across all assets in the modelled network level is expected to exceed the simultaneous maximum load for the network level as a whole.
Diversity Factor	A scaling factor calculated as the ratio of the maximum demand observed at a given location on the network and the aggregate of the individual maximum demands observed at multiple locations connected downstream (i.e. further from source) of the given location, taking account of losses. Such factors provide a means of recognising that the maximum demands observed at individual locations (e.g. substations at a given voltage level) on a section of network may not be coincident. Details of the calculation of Diversity Factors are set out in section 5.9 (Diversity Factors) of Annex 1.
EDCM	has the meaning given to that expression in Paragraph 1
EDCM Connectee	means a Connectee whose Connected Installation is a Designated EHV Property as defined in Standard Conditions 50A.11 and 13B.6 of the DNO Party's Distribution Licence.
EDCM Customer	means a Customer whose Customer Installation is a Designated EHV Property as defined in Standard Conditions 50A.11 and 13B.6 of the DNO Party's Distribution Licence.
EDCM Generation	means a Generator Installation that is a Designated EHV Property as defined in Standard Conditions 50A.11 and 13B.6 of the DNO Party's Distribution Licence.
EHV	Extra High Voltage.
Eligible Bad Debt	means any bad debts with respect to Use of System Charges that the DNO Party can recover in accordance with the DNO Party's Distribution Licence. For the avoidance of doubt, this definition includes the DNO Party's bad debt and bad debt which the DNO Party is recovering on behalf of LDNOs.
Embedded	means connected to a LDNO's Distribution System.
ER P2/6	Energy Network Association's Engineering Recommendation P2/6 which is the planning standard for security of supply to be used by the DNO Parties.
ETR 130	Energy Network Association's Engineering Technical Report 130 which is the Application Guide for assessing the capacity of Distribution Systems to which Generation Installations are connected.
Extra High Voltage (EHV)	Refers to voltages operating on the Authorised Network Model at 22kV or higher.
Forecast Business Plan Questionnaire or FBPQ	means the questionnaire that the DNO Party is required to submit under the Regulatory Instructions and Guidance issued by the Authority under the DNO Party's Distribution Licence.
FCP	Has the meaning given to that expression in Paragraph 2.1

Grid Supply Point (GSP)	A point of supply from the National Electricity Transmission System to the DNO Party's Distribution System.
High Voltage (HV)	Refers to voltages operating on the Authorised Network Model above 1000 volts but lower than 22kV.
kV	Kilovolt (1,000 Volts): a unit of voltage.
kVA	Kilo Volt Ampere: a unit of network capacity.
kVAr	Kilo Volt Ampere reactive: a unit of reactive power flow. The network capacity used by a flow of A kW and B kVAr is SQRT(A^2+B^2) kVA.
kVArh	kVA reactive hour: a unit of total reactive power flow over a period of time. Reactive power meters usually register kVArh.
kW	Kilowatt (1,000 Watts): a unit of power flow.
kWh	Kilowatt hour: a unit of energy. Meters usually register kWh.
LDNO	refers to a licensed distribution network operator, meaning an IDNO Party or a DNO Party operating an electricity distribution system outside of its Distribution Services Area.
Long Term Development Statement (LTDS)	The Long Term Development Statement as detailed by Licence Condition 25 of the Distribution Licences.
LV	Nominal voltages of less than 1kV.
Maximum Demand Data	The Network Demand Data that is applied to the demand (load) analysis for N-1 contingency testing. The construction of Maximum Demand Data is described in section 5.35 (Maximum **Demand Data for Demand (Load) Analysis**) of Annex 1.
Maintenance Demand Data	The Network Demand Data that is applied to the demand (load) analysis for N-2 contingency testing (by supposition, this would consider N-1 contingencies). The construction of Maintenance Demand Data is described in section 5.41 (Maintenance Demand Data for Demand (Load) Analysis) of Annex 1.
MVA	Mega Volt Ampere (1,000 kVA): a unit of network capacity.
MW	Megawatt (1,000 kW): a unit of power flow.
MWh	Megawatt hour (1,000 kWh): a unit of energy. Energy trading is usually conducted in MWh.
N-1 Contingency	An N-1 Contingency considers an N-1 Event occurring on the Authorised Network Model and models the consequential network actions and where appropriate constraints on customer demands. This is used to ensure that the resultant flows in Branches that remain in service are within rated capacity.
N-1 Event	An N-1 Event is a First Circuit Outage (FCO) as explained in ER P2/6. It signifies a fault or arranged outage on the network which would result in a section of the network defined by the relevant protection scheme to sectionalise and isolate the faulty section, or isolates the section to be worked on for maintenance, resulting in zero power flow in the affected network. N-1 Events should consider an outage of a complete Circuit and only consider faults or arranged outages occurring with the network initially running under Normal Running Arrangements.
N-2 Contingency	An N-2 Contingency considers an N-2 Event occurring on the Authorised Network Model and models the consequential network actions and where appropriate constraints on customer demands. This is used to ensure that the resultant flows in Branches that remain in service are within rated capacity.
N-2 Event	An N-2 Event is a Second Circuit Outage (SCO) as explained in ER P2/6. It signifies the occurrence of a fault on the network at the same time as a planned outage which would result in a section of the network defined by the relevant protection scheme to sectionalise and isolate the faulty section. As N-2 Events are considered to have occurred at the same time as a planned outage, they are confined to the maintenance period, as designated by the DNO Party. Maintenance Demand Data is used when considering N-2 Events.
National Electricity Transmission System	Has the meaning given to that expression in the CUSC
Negative Load Injection	A Negative Load Injection is a negative value of load calculated and applied to a source substation within the network model to represent the effects of diversity between associated downstream demands upon the actual demand observed at the source substation.
Net Diversity Factor	A scaling factor that represents the diversity between the maximum demands observed at substations at different levels of a network, which may be derived by multiplying Diversity Factors representing the diversity between interim levels.
network	This is a reference to the DNO Party's Distribution System, or to a particular part of that Distribution System.
Network Demand Data	This is the load and generation which is used to populate the Authorised Network Model. Network Demand Data is constructed of Network Demand Data (Load) and Network Demand Data (Generation).
Network Demand Data (Generation)	Generation export applied within the Authorised Network Model at Nodes representing the Entry Point for each EHV connected customer with an agreed Maximum Export Capacity factored according to ER P2/6, where appropriate.
Network Demand Data (Load)	The load applied within the Authorised Network Model at Nodes representing the Exit Point for each EHV customer and the lower voltage busbars at substations representing transformation points between Network Groups or EHV/HV substations.
Network Group	This is one of the parts of the Authorised Network Model described in Paragraph 2.7 and section 6 (Network Groups) of Annex 1.

network level	The network is modelled as a stack of circuit and transformation levels between supplies at LV and the National Electricity Transmission System. A network level is any circuit or transformation level in that stack. An additional network level is used for transmission exit.
Node	A representation of a point on the DNO Party's EHV network that is a point of connection between a Branch and one or more of the following: • another Branch; or • an Entry Point or the Sole Use Assets connecting the Entry Point; or • an Exit Point or the Sole Use Assets connecting the Exit Point; or • the DNO Party's HV network; or • the Distribution System of another DNO Party or IDNO Party; or • the National Electricity Transmission System.
Non-Final Demand Site	as defined in Schedule 32
Normal Running Arrangements	The DNO Party's EHV network with no system outages i.e. with no planned outages (e.g. for maintenance) and no unplanned outages (e.g. subsequent to a fault).
Point of Common Coupling	The point on the network where the power flow associated with the single Connectee under consideration, may under some (or all) possible arrangements interact with the power flows associated with other Connectees, taking into account all possible credible running arrangements
Power factor	The ratio of energy transported (kW) to network capacity used (kVA).
Portfolio tariff	A tariff for use of the network by another DNO/IDNO Party where charges are linked to flows out of/into the other DNO/IDNO Party's network from its Connectees or further nested networks.
Primary Substation	A substation on the DNO Party's Distribution System transforming the voltage from EHV to HV, e.g. 33/11kV
Reactive Power	The product of the voltage and current and the sine of the phase angle between them, measured in units of voltamperes reactive.
Regulatory Year	has the meaning given to that expression in the DNO Party's Distribution Licence.
RRP	Regulatory reporting pack, a dataset produced each year by each DNO Party for the Authority.
Sole Use Assets	Assets in which only the consumption or output associated with a single Connectee can directly alter the power flow in the asset, taking into consideration all possible credible running arrangements, i.e. all assets between the Connectee's Entry/Exit Point(s) and the Point(s) of Common Coupling with the general network.
Source Substation	Any substation which connects, via transformers and under Normal Running Arrangements, a particular Network Group to its "upstream" source. For example, for a 33kV group, the Source Substation is taken as the interconnecting 132/33kV grid transformers. A single Network Group may have more than one Source Substation.
Supplier of Last Resort	a supply licensee to which a Last Resort Supply Direction applies, where Last Resort Supply Direction has the meaning given to that expression in the Supply Licence.
System simultaneous maximum load	The maximum load for the GSP Group as a whole.
Transformer Branch	A categorisation used in the derivation of Branch reinforcement costs, for Branches that represent transformation between different voltage levels.
unit	Where the context permits, the word unit refers to kWh.
unit rate	A charging or payment rate based on units distributed or units generated. Unit rates are expressed in p/kWh. Tariffs applied to multi-rate meters and/or using several time bands for charging have several unit rates.

4. NETWORK MODELLING

4.1 This section describes the input data required to model the Distribution System for pricing purposes. The FCP methodology requires the Authorised Network Model to be populated with different load and generation levels, corresponding to the Demand (load) and Demand (generation) scenarios being analysed.

Authorised Network Model

4.2 This is the network model that represents the entire EHV network, from the GSP level down to and including the HV busbar at the EHV/HV transformation level and includes all authorised (i.e. sanctioned by the DNO Party) schemes (reinforcement, diversion and new connection works) that are anticipated to be constructed and operational at the time of Maximum Demand in the Regulatory Year for which the Use of System Charges are being calculated. Where a part of a single authorised network project is expected to be commissioned and operational in the Regulatory Year for which Use of System Charges are to be calculated

then the DNO Party may, if appropriate, model the fully completed network project. The model should also include a representation of the National Electricity Transmission System.

4.3 The Authorised Network Model may be constructed so that power flow analysis may be conducted separately upon individual Grid Supply Points (or groups of normally interconnected Grid Supply Points) provided that there is no interconnection with adjacent Grid Supply Points considered in the analysis of the respective contingency conditions and any interaction arising from the transfer of demand and generation is correctly accounted for.

4.4 Due to the timings difference between the publication of the LTDS and the creation and publication of use of system tariffs, the Authorised Network Model may contain revised assumptions to the LTDS information.

4.5 A representation of the National Electricity Transmission System shall be included in the model. The complexity of the representation shall be dependent on the level of interconnection of Grid Supply Points via the DNO Party's EHV network. The representation may be:

a. a simple generator in-feed at the Grid Supply Point; or

b. the use of equivalent circuits to model the interconnections of the Grid Supply Points via the National Electricity Transmission System; or

c. a full replication of the National Electricity Transmission System electrically local to the DNO Party's Distribution System; or

d. a full replication of the whole of the National Electricity Transmission System.

4.6 The method of representation should be carefully selected in order to produce a suitable representation of the flows into the DNO Party's EHV network from the National Electricity Transmission System during both Normal Running Arrangements and N-1 Contingency scenarios.

4.7 The Authorised Network Model can be modelled so that it takes into account every different section of a circuit, including individual underground cables and overhead line sections, with each different type forming a separate Branch in the model connected between two Nodes. However, this approach can lead to known issues associated with the non-convergence for a power flow solution of models with large numbers of Nodes and large numbers of Branches with very small impedances.

4.8 It is acceptable to model a single Branch to represent a composite of multiple subcomponents of underground cable and overhead line. The impedance of a composite Branch can be calculated from the types of subcomponent that make up the overall Circuit length. The rating of a composite Branch can be obtained by examining the rating of all the Branch subcomponents and the lowest rating used as the limiting section that overloads first. For underground cables the impedance and rating is dependent upon the construction type of the cable, cross sectional area of the conductor, conductor material, whether the cable is laid directly in the ground or in ducts. Similarly, for overhead lines the impedance and rating is dependent upon the construction type of the overhead line structures (to take account of the relative positions of the conductors), the conductor material and type and cross sectional area. This information can then be used to determine the Branch impedance and minimum component rating applied in the Authorised Network Model.

4.9 As an example, if Figure 2 represents the actual network, the approach described above to produce the EHV network model would reduce it to a nodal model representation as shown in Figure 2. Table 4.9 shows an example of the data held relating to Figure 2 with the individual subsections being cross referenced to each Branch; Table 4.9A lists the parameters used for the nodal model shown in Figure 3.

Figure 2 An example of a section of network to be converted into a nodal model.

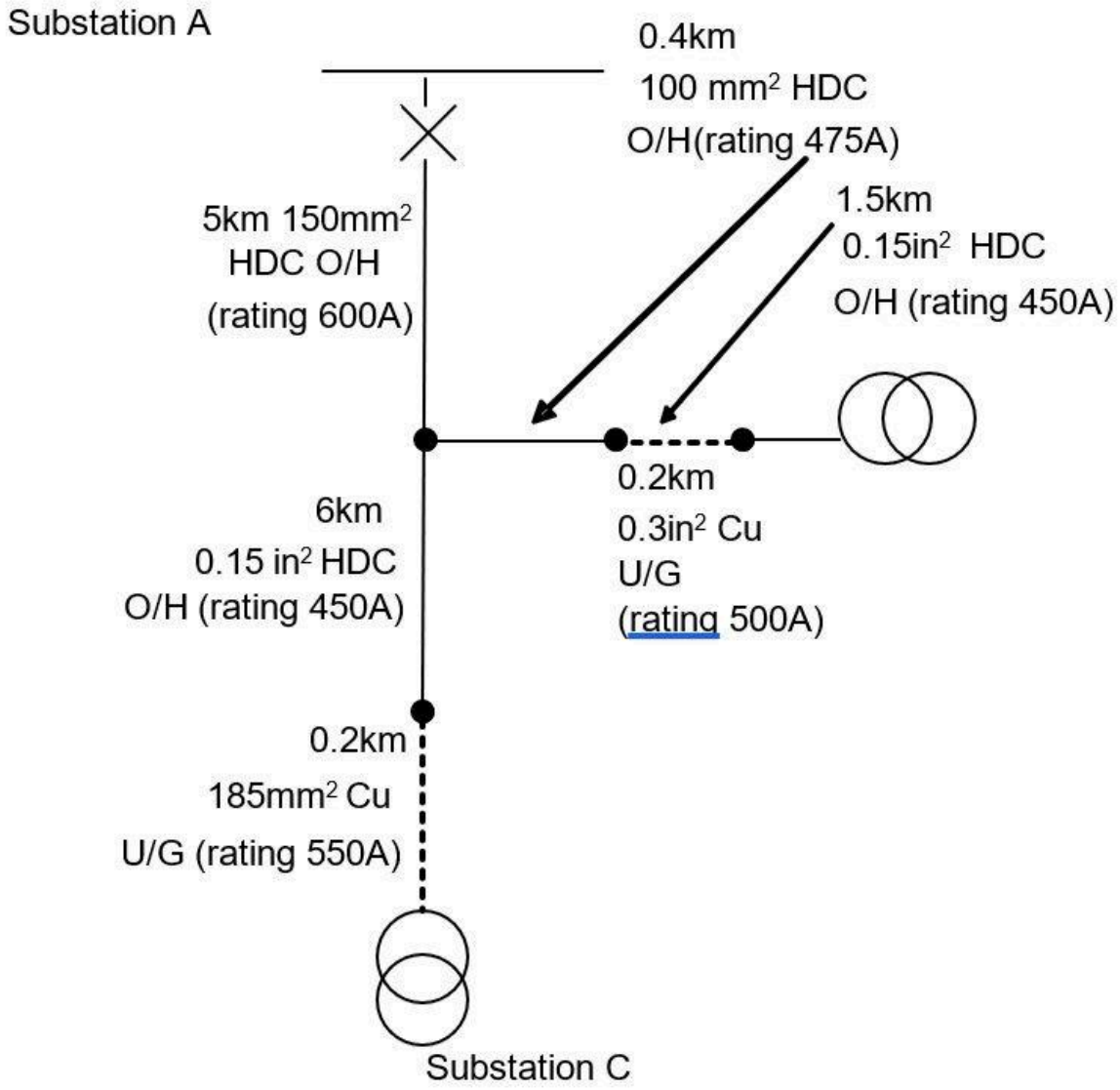

Figure 3 The resultant nodal model representative of the example network in Figure 2.

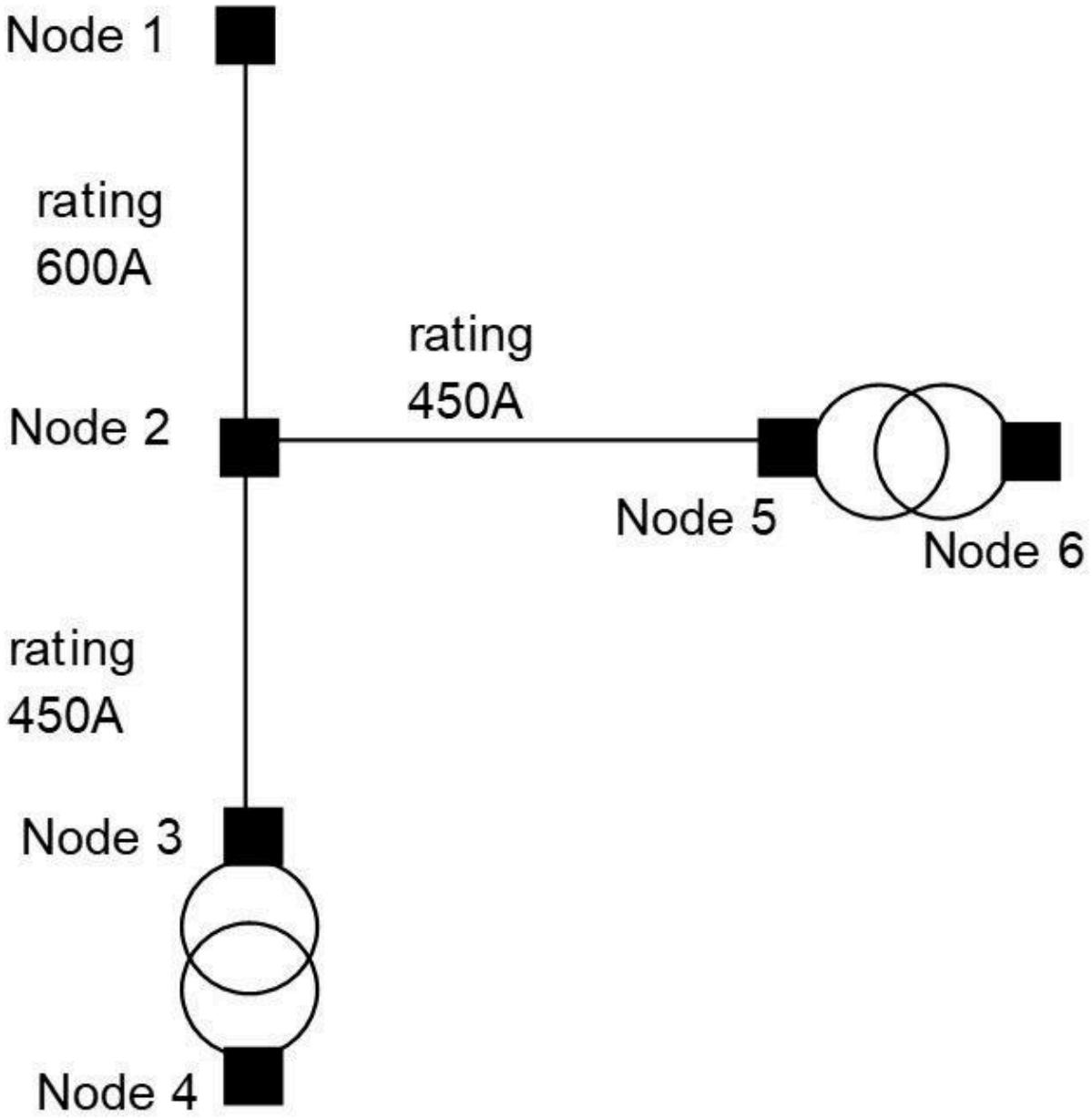

Table 4.9 An example of the information held separately relating to Figure 2 which is used to provide the composite Branch parameters.

Branch	Line Section	Type	Length	Rating	R(p.u.)[1]	X(p.u.)
Node 1 to Node 2	1	150mm^2 HDC O/H	5km	600A	0.001	0.01
Node 2 to Node 3	1	0.15in^2 HDC O/H	6km	450A	0.0018	0.0054
Node 2 to Node 3	2	185mm^2 Cu U/G	0.2km	550A	0.00003	0.0003
Node 2 to Node 5	1	100mm^2 HDC O/H	0.4km	475A	0.00004	0.0004
Node 2 to Node 5	2	0.3in^2 Cu U/G	0.2km	500A	0.00003	0.0001
Node 2 to Node 5	3	0.15in^2 HDC O/H	1.5km	450A	0.00045	0.00135

[1] For the sake of simplicity ratings, resistance (R) and reactance (X) values given above are assumed and should be used only for illustrative purposes such as the given example to calculate equivalent Branch ratings and parameters for a composite Branch.

Table 4.9A Composite Branch parameters used for the nodal model shown in Figure 3 above.

Branch	Branch Rating	R(p.u.)	X(p.u.)
Node 1 to Node 2	600A	0.001	0.01
Node 2 to Node 3	450A	0.00183	0.0057
Node 2 to Node 5	450A	0.00052	0.00185

Inclusion of Distribution Systems of LDNOs in the Authorised Network Model

4.10 Where there is a connection between the DNO Party's Distribution System and an EDCM LDNO Distribution System, the LDNO's network can be represented either by an Exit Point or Entry Point, in a similar manner to that of an ECDM Connectee. In the event that the LDNO's network derives its supply from several different connection points on the DNO Party's Distribution System it may become necessary to model some or the entire LDNO network to ensure that the flows at the boundary between the DNO Party's Distribution System and the Distribution System of the LDNO are representative of those expected under Normal Running Arrangements and Contingency scenarios.

5. NETWORK DEMAND DATA

5.1 This section 5 describes the input data required to model the Distribution System for FCP purposes.

Network Demand Data (Load)

5.2 The demands (load) in the Authorised Network Model will be based on LTDS network data as produced by the DNO Party. It is necessary to create a 10-year demand (load) set to assess the network for the 10-year study period. The following Network Demand Data is required as the basis for populating the Authorised Network Model:

a. Maximum Demands at each Connection Node;

b. Maximum Demands at Grid Supply Points; and

c. Maximum Demands at Bulk Supply Points or other intermediate substations.

5.3 The load estimates in the LTDS are normally cleansed and validated ensuring:

a. maximum loads that are recorded reflect Normal Running Arrangements;

b. application of suitable weather correction is considered, if appropriate; and

c. latent demand is accounted for in accordance with the guidance contained in ETR 130.

5.4 The LTDS forecasts the demand (loads) for 5 years. The remaining years (years 6 to 10) are to be assessed by the DNO Party using the appropriate engineering forecasts and local knowledge and information.

5.5 Where new EDCM Customers are included in the Authorised Network Model, their demands will be individually assessed and estimated by the DNO Party.

Network Demand Data (Generation)

5.6 Existing EDCM Generation in the model will be based on the Maximum Export Capacity for the EDCM Generation. Depending on the power flow studies being undertaken these may be scaled by an F factor as described in ER P2/6. Where sufficient actual recorded network data exists, a generator’s site-specific F factor may be calculated, as described in ETR 130.

Modelling of Customers with both Load and Generation

5.7 'Import/Export' Connectees (Connectees that have the ability to import electricity from and export electricity to the Distribution System) require special consideration.

5.8 The flows associated with these Connectees should contribute solely to the Network Demand Data (Load) element of the Maximum Demand Data and Maintenance Demand Data data sets. These demands should be derived as described in the Maximum Demand Data for Demand (Load) Analysis and Maintenance Demand Data for Demand (Load) Analysis.

Diversity Factors

5.9 The demands that are required to be populated in the Authorised Network Model need to be set so the modelled demand supplied through a GSP is equal to the Maximum Demand at the GSP as described in the Network Demand Data (Load) section. This may be achieved by using Diversity Factors to modify the Connection Node maximum demands or by the use of Negative Load Injections. The following describes acceptable methods to achieve this requirement.

5.10 To aid the description a simple network is shown in Figure 4 below which will provide a basis for the examples.

Figure 4 - Example model for the calculation of Diversity Factors

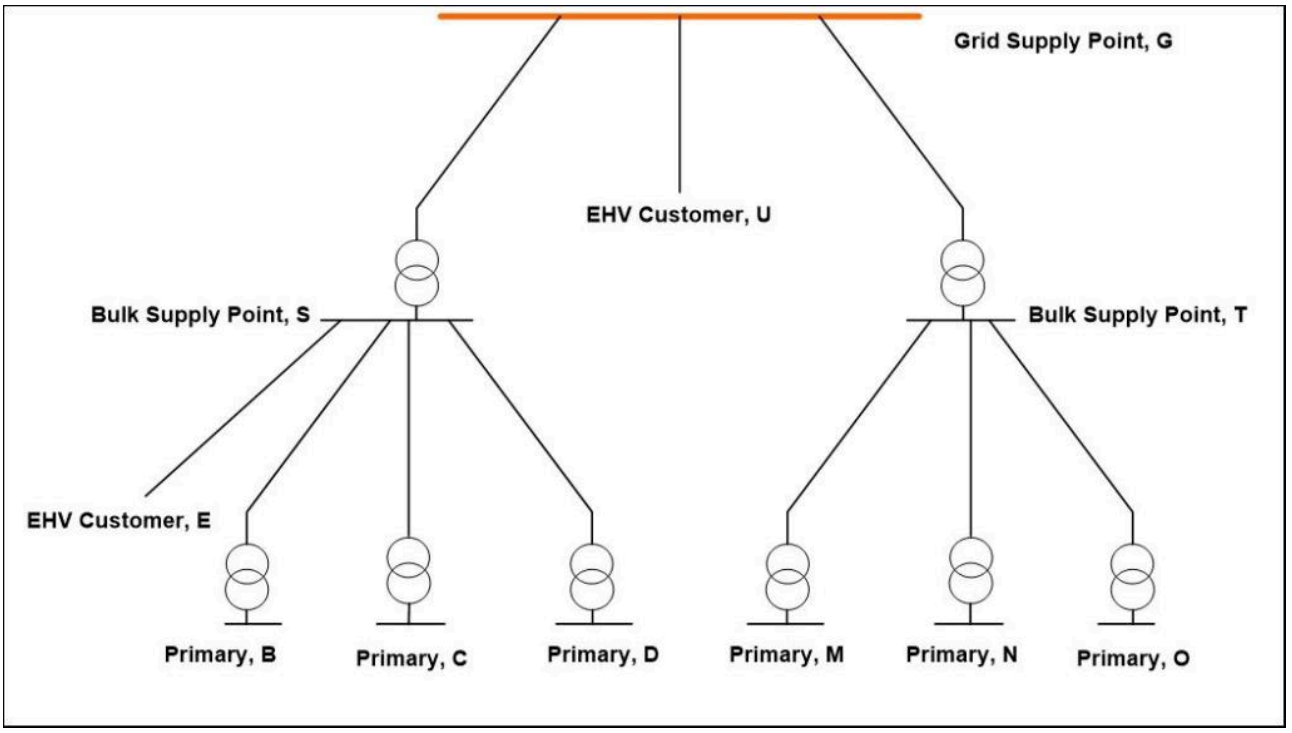

Method 1 – Hierarchical Diversity Factors

5.11 Networks are typically built as a hierarchy. The typical hierarchy levels are Primary Substation, Bulk Supply Points and Grid Supply Points. There may also occasionally be other intermediate levels such as 132kV switching substations. A Diversity Factor can then be calculated for each required substation. The Diversity Factor is calculated as the maximum demand at that substation divided by the sum of the maximum demands of all points of the network at the next lower hierarchy served by that substation plus an allowance for losses in that part of the network.

5.12 In our example, for Bulk Supply Point, S (see Figure 4), supplying three Primary Substations, B, C and D, and an EDCM Customer E, the Diversity Factor is derived as:

$$DF_s = \frac{MD_s}{MD_B + MD_C + MD_D + MD_E + losses_{s\rightarrow}}$$

Where:

DF_S	=	diversity factor
MD_S	=	maximum demand at substation S
MD_B	=	maximum demand at substation B
MD_C	=	maximum demand at substation C
MD_D	=	maximum demand at substation D
MD_E	=	maximum demand at substation E
$losses_{S\rightarrow}$	=	line losses in the downstream network supplied from Bulk Supply Point S

5.13 Similarly for Grid Supply Point, G, supplying two Bulk Supply Points, S and T, and an EDCM Customer U, the Diversity Factor is derived as:

$$DF_G = \frac{MD_G}{MD_S + MD_T + MD_U + losses_{G\rightarrow}}$$

Where:

DF_G	=	diversity factor
MD_G	=	maximum demand at substation G
MD_S	=	maximum demand at substation S
MD_T	=	maximum demand at substation T
MD_U	=	maximum demand at substation U
$losses_{G\rightarrow}$	=	line losses in the downstream network supplied from Grid Supply Point G

5.14 Diversity Factors are calculated separately for each substation at each level. In our example, Diversity Factors would be calculated for substations S, T, and G. A Net Diversity Factor is then applied to each Connection Node based on the product of Diversity Factors of all the Substations that supply that Connection Node. In the example, the following Net Diversity Factors would be applied to each of the Connection Nodes.

Table 5.14 - Calculation of Net Diversity Factors - Hierarchical Diversity Factors

Connection Node	Maximum Demand	Net Diversity Factor	Demand to be applied to the Network Model
Primary, B	MD_B	DF_G* DF_S	DF_G* DF_S * MD_B
Primary, C	MD_C	DF_G* DF_S	DF_G* DF_S * MD_C
Primary, D	MD_D	DF_G* DF_S	DF_G* DF_S * MD_D
EHV Customer, E	MD_E	DF_G* DF_S	DF_G* DF_S * MD_E

Primary, M	MD_M	DF_G* DF_T	DF_G* DF_T * MD_M
Primary, N	MD_N	DF_G* DF_T	DF_G* DF_T * MD_N
Primary, O	MD_O	DF_G* DF_T	DF_G* DF_T * MD_O
EHV Customer, U	MD_U	DF_G	DF_G* MD_U

5.15 Diversity Factors are applied to both the Active Power and Reactive Power demands at each Connection Point thus ensuring the power factor of the demand remains unchanged.

Method 2 – Single Diversity Factors

5.16 Where a network has significant interconnection or subject to regular rearrangement (e.g. Primary Substations being transferred between Bulk Supply Points) the use of a single Diversity Factor for all the demand supplied by a Grid Supply Point (or a set of interconnected Grid Supply Points) may be appropriate. The Diversity Factor for the GSP is calculated as the Maximum Demand at the GSP divided by the sum of all the Maximum Demands of each Connection Node supplied from that GSP plus an allowance for losses.

5.17 Using the example shown in Figure 4 a single Diversity Factor for Grid Supply Point, G can be calculated as:

$$DF_{G1} = \frac{MD_G}{MD_B + MD_C + MD_D + MD_E + MD_M + MD_N + MD_O + MD_U + losses}$$

Where:

DF_{G1}	=	diversity factor
MD_G	=	maximum demand at substation G
MD_B	=	maximum demand at substation B
MD_C	=	maximum demand at substation C
MD_D	=	maximum demand at substation D
MD_E	=	maximum demand at substation E
MD_M	=	maximum demand at substation M
MD_N	=	maximum demand at substation N
MD_O	=	maximum demand at substation O
MD_U	=	maximum demand at substation U
$losses_{S\rightarrow}$	=	network losses in the system shown in Figure 4

5.18 The Net Diversity Factor in this method is equal to the calculated single Diversity Factor. In the example the following Net Diversity Factors would be applied to each of the Connection Nodes.

Table 5.18 - Calculation of Net Diversity Factors – Single Diversity Factors

Connection Node	Maximum Demand	Net Diversity Factor	Demand to be applied to the Network Model
Primary, B	MD_B	DF_{G1}	DF_{G1} * MD_B
Primary, C	MD_C	DF_{G1}	DF_{G1} * MD_C
Primary, D	MD_D	DF_{G1}	DF_{G1} * MD_D
EHV Customer, E	MD_E	DF_{G1}	DF_{G1} * MD_E

Primary, M	MD_M	DF_{G1}	$DF_{G1} * MD_M$
Primary, N	MD_N	DF_{G1}	$DF_{G1} * MD_N$
Primary, O	MD_O	DF_{G1}	$DF_{G1} * MD_O$
EHV Customer, U	MD_U	DF_{G1}	$DF_{G1} * MD_U$

5.19 Diversity Factors are applied to both the Active Power and Reactive Power demands at each Connection Point thus ensuring the power factor of the demand remains unchanged.

Method 3 – Negative Load Injections

5.20 A Negative Load Injection is a negative value of load calculated and applied to a source substation within the network model to represent the effects of diversity between associated downstream demands upon the actual demand observed at the source substation.

5.21 Negative Load Injections are applied at a substation to ensure that the demand at the substation equals the required Maximum Demand for that substation. Negative load injections are normally placed at Bulk Supply Points, other intermediate substations (such as 132kV switching substations) and Grid Supply Points.

5.22 The amount of negative load injection required to be applied at a substation is calculated as the maximum demand at that substation minus the sum of the maximum demands of all points of the network at the next lower hierarchy served by that substation plus an allowance for losses in that part of the network.

5.23 In our example, for Bulk Supply Point, S, supplying three Primary Substations, B, C and D, and an EDCM Customer E, Negative Load Injection is derived as:

$$NLI_S = MD_S - (MD_B + MD_C + MD_D + MD_E + losses_{S\rightarrow})$$

Where:

NLI_{G1}	=	negative load injection
MD_S	=	maximum demand at substation S
MD_B	=	maximum demand at substation B
MD_C	=	maximum demand at substation C
MD_D	=	maximum demand at substation D
MD_E	=	maximum demand at substation E
$losses_{S\rightarrow}$	=	line losses in the downstream network supplied from Grid Supply Point G

5.24 Similarly for Grid Supply Point, G, supplying two Bulk Supply Point, S and T, and an EDCM Customer U, Negative Load Injection is derived as:

$$NLI_G = MD_G - (MD_S + MD_T + MD_U + losses_{S\rightarrow})$$

Where:

NLI_G	=	negative load injection
MD_G	=	maximum demand at substation G

MD_S	=	maximum demand at substation S
MD_T	=	maximum demand at substation T
MD_U	=	maximum demand at substation U
$losses_{S\rightarrow}$	=	line losses in the downstream network supplied from Grid Supply Point G

5.25 The value of Negative Load Injection calculated is a negative number. This is modelled as a negative load (or in fact generation) at the substation busbar so that the incoming flow matches the required maximum demand for that substation. Negative Load Injections are applied as an Active Power injection only. No Reactive Power injection is applied.

An Implementation of Diversity Factors Using Multiple Load Sets

5.26 The use of Network Groups for analysis in the FCP methodology allows for different levels of the network to be loaded independently with different Network Demand Data (Load). By loading all Primary Substations and EDCM Customers with their maximum demands as recorded in the LTDS, the total system demand at each GSP will be significantly higher than the demand reported to the Independent System Operator and Planner for the Week 24 submission. This excessive loading of the higher voltage network levels would give rise to premature reinforcement at this level as diversity has not been considered. However, when considering this Primary Substation load set only reinforcements between the lower voltage busbars of the Primary Substations and the lower voltage busbars of the supplying higher voltage substations are considered. The assets observed for overloads and hence need reinforcing are therefore the Primary Substation transformers and their supplying EHV Circuits, if applicable.

Example on a radial network

5.27 An example showing a radial network loaded with a Primary Substation load set is shown in Figure 5 and the shaded box shows the assets considered when looking for overloads. All upstream Branches should be ignored if they overload as these will be tested by a separate load set.

5.28 With the Primary Substation level tested, the loads connected to Primary Substations and EDCM Customers may be removed and the BSP substations maximum demands loaded as per the LTDS. An alternative approach to removing these loads would be to retain them in the network model but to scale them using appropriate diversity factors to match Maximum Demands at the BSP substations (as set out in Method 1).

5.29 The BSP load set can then be used to test the network assets between the BSP lower voltage busbar and the supplying GSP. Figure 6 shows the same network but with the BSP loads applied, the assets in the shaded box are the ones observed for overloads. It is accepted that using all BSP maximum demands (load) the resultant loads at the GSPs will not equal the maximum demands reported to Independent System Operator and Planner for the Week 24 submission. The extra demand (load) may overload the GSP transformers, however, these are zero-cost Branches as they are transmission assets; the Reinforcement Cost Calculation Principles section describes zero-cost Branches further.

Figure 5 - Network schematic showing Primary Substations loaded with maximum demands and the network assets monitored for overloads

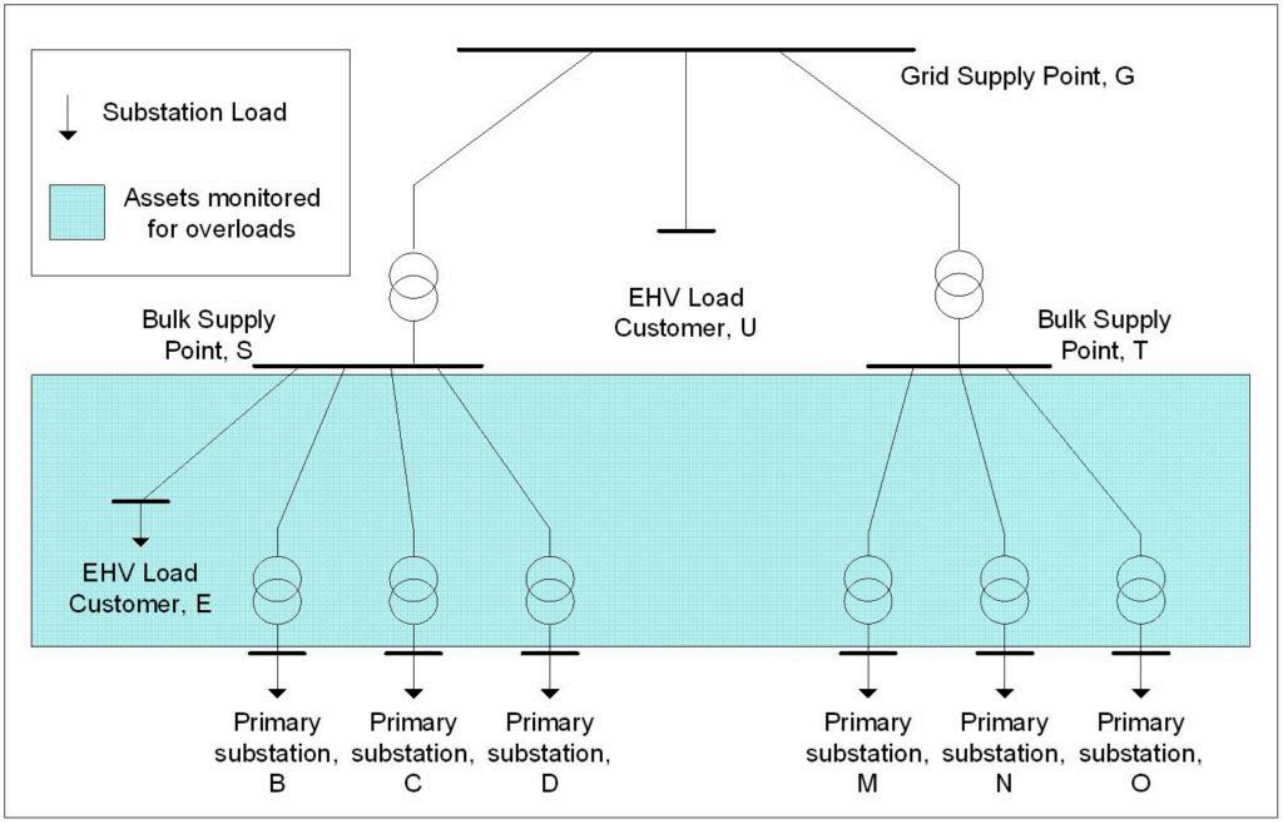

Figure 6 - Network schematic showing Primary Substations loads removed and BSP loads added, also showing the network assets monitored for overloads

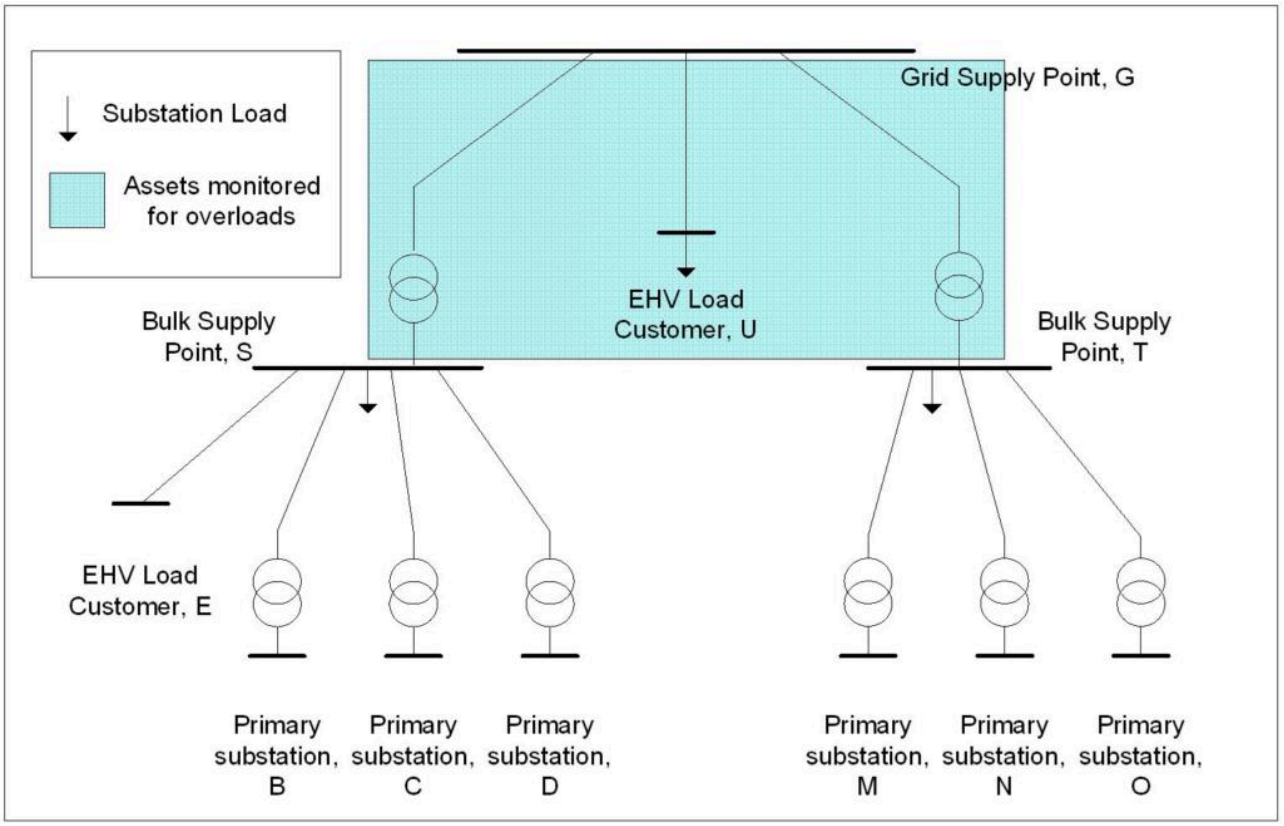

An implementation of diversity factors using multiple load sets (meshed and radial mix)

5.30 Where networks are comprised of a mix of radial and meshed sections (such as shown in Figure 6), it may not be appropriate to consider all substations as being loaded to their maximum demands. This implementation involves the application of hierarchical Diversity Factors to loads on meshed sections while the loads on the radial sections remain unchanged. The procedure is described below.

Calculation of hierarchical diversity factors:

5.31 Hierarchical diversity factors for each network group are calculated as described in Method 1.

Application of the hierarchical diversity factors:

5.32 The hierarchical diversity factors are applied only to the loads on meshed sections (see table 5.34 below).

Multiple network analyses:

5.33 The Primary Substation level is loaded and used to test for overloaded Branches between the Primary Substations and the BSPs (excluding any BSP transformers). To test for overloaded Branches between a BSP and a GSP, all downstream demand (load) supplied from the BSPs are removed - for example, demand (load) connected to Primary Substations B, C, D and EDCM Customer E would be removed when testing for overloaded Branches between BSP S and GSP G. BSP loads are then applied to the network model.

Figure 7 - Implementation of Diversity Factors using multiple load sets

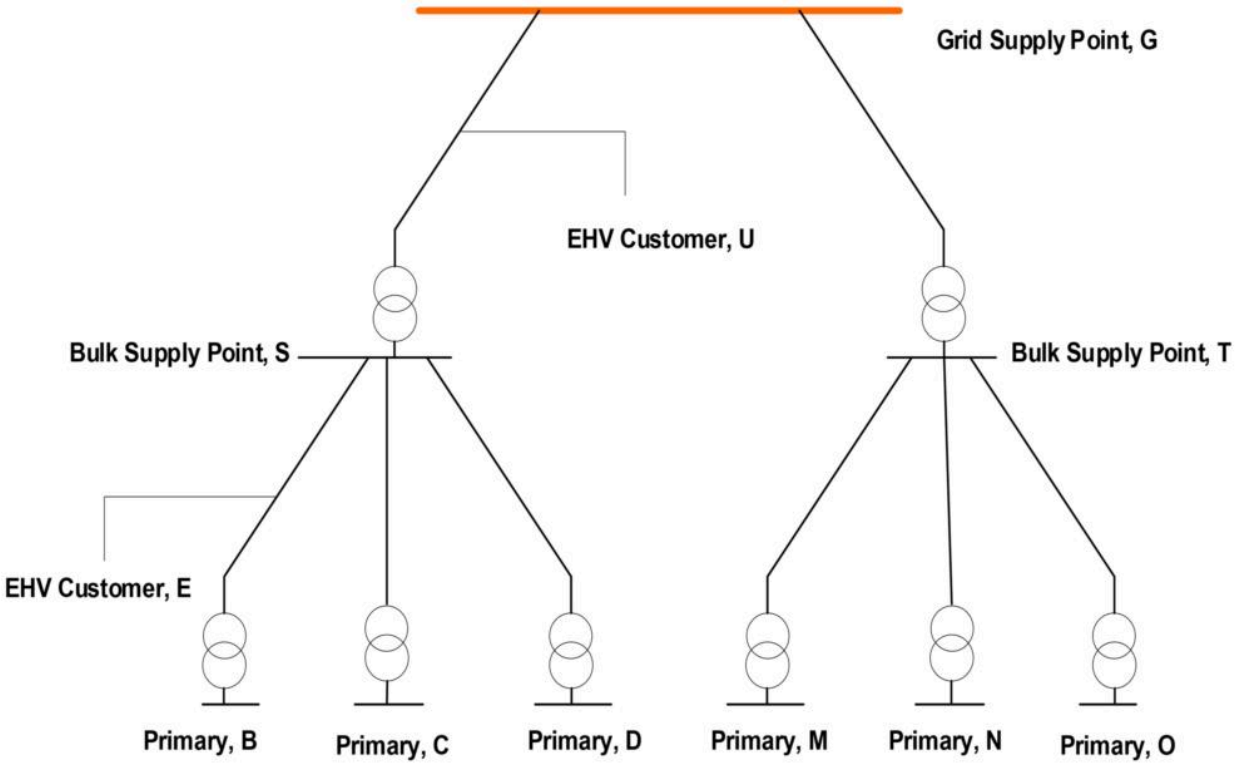

5.34 The final load which applied at each substation is shown in table 5.34 below:

Table 5.34 - Calculation of Diversity Factors - Multiple load sets (meshed and radial mix)

Connection Node	Maximum Demand	Diversity Factor	Demand to be applied to the Network Model
Primary, B	MD_B	DF_S	$MD_B * DF_S$

Primary, C	MD_C	1.00	MD_C
Primary, D	MD_D	1.00	MD_D
EHV Customer, E	MD_E	DF_S	$MD_E * DF_S$
Primary, M	MD_M	1.00	MD_M
Primary, N	MD_N	1.00	MD_N
Primary, O	MD_O	1.00	MD_O
EHV Customer, U	MD_U	DF_G	$MD_U * DF_G$
Bulk Supply Point, S	MD_S	DF_G	MDs * DF_G
Bulk Supply Point, T	MD_T	1.00	MD_T

Maximum Demand Data for Demand (Load) Analysis

Network Demand Data (Generation)

5.35 The Network Demand Data (Generation) element of the Maximum Demand Data shall be constructed with generation output set at zero unless the generation can be considered to have a contribution to security of supply under ER P2/6, in which case the ER P2/6 level of export shall be modelled.

5.36 The contribution of distributed generation to security of supply is dealt with in ER P2/6 through the application of F factors. Each distributed generator is assigned an F factor and this represents the percentage of the generator's declared net capacity that can be considered when assessing network security. ER P2/6 also uses the term 'Persistence' to reduce the F factor for intermittent generation, as the time period (in hours) for which its contribution to security is being assessed increases. Table 2-4 of ER P2/6 recommends values of 'Persistence'; these values are dependent on the demand class being assessed. The value of 'Persistence' to be used for intermittent generation will be as stated in Table 2-4 of ER P2/6 for 'Other outage', using the maximum GSP (or GSP groups') demand instead of the demand class of the demand group.

Network Demand Data (Load)

5.37 The Network Demand Data (Load) element of the Maximum Demand Data shall be constructed based on the Maximum Demands for each load point and either amended (Diversity Factors) or enhanced (Negative Load Injections) by the chosen diversity method (see the Diversity Factors section).

5.38 For the diversity methods 1 and 2 the maximum demand load estimates for each load point is scaled so that the modelled load in the Maximum Demand Data reflects the Grid Supply Point maximum load estimates under Normal Running Arrangement.

5.39 The application of diversity in the derivation of this data needs to be carefully considered and aim to produce, where possible, within the constraints of a single set of demand data, power flows that reflect typical flows under the Maximum Demand conditions; but also enable calculations to be undertaken upon an Authorised Network Model.

5.40 In considering the derivation of the Maximum Demand Data, it must be recognised that power flow analysis based on this Network Demand Data may not replicate the maximum power flow through individual assets that could be seen under all N-1 Contingency conditions, due to the limitations of analysis based upon a limited number of sets of Network Demand Data.

Maintenance Demand Data for Demand (Load) Analysis

Network Demand Data (Generation)

5.41 The Network Demand Data (Generation) element of the Maintenance Demand Data shall be the same as that modelled for the Maximum Demand Data.

Network Demand Data (Load)

5.42 The Network Demand Data (Load) element of the Maintenance Demand Data shall be constructed using the Maximum Demand Data load values scaled down to a minimum of 67% to represent the peak load demands observed during the maintenance period. Where actual loads are higher than 67% of Maximum Demand Data they can be used instead.

5.43 For the diversity methods 1 and 2 the maintenance demand load estimates for each load point are scaled so that the modelled load in the Maintenance Demand Data reflects the Grid Supply Point maintenance peak load estimates under Normal Running Arrangement.

5.44 The application of diversity in the derivation of this data needs to be carefully considered and aim to produce, where possible, within the constraints of a single set of demand data, power flows that reflect typical flows under the peak maintenance demand conditions; but also enable calculations to be undertaken upon an Authorised Network Model.

5.45 In considering the derivation of the Maintenance Demand Data, it must be recognised that power flow analysis based on this Network Demand Data may not replicate the maximum power flow through individual assets that could be seen under all N-2 Contingency conditions, due to the limitations of analysis based upon a limited number of sets of Network Demand Data.

6. NETWORK GROUPS

6.1 For the purpose of forecasting future reinforcement the network is broken down into a number of Network Groups. The use of Network Groups for analysis is an important stage in assessing security of supply requirements given in ER P2/6. Network Groups are defined at hierarchical levels, each level being defined by the operating voltage of the source substations, such that separate Network Groups are defined for Primary Substation, BSP and GSP levels.

6.2 Each Network Group is a part of the Distribution System that consists of:

a. the transformation assets at a source substation; and
b. the network that:

i. operates at the same voltage as the lower voltage of these transformation assets; and
ii. is electrically connected to these transformation assets, under Normal Running Arrangements, excluding electrical connection through assets operating at voltages other than the lower voltage of the transformation assets.

6.3 The following exceptions apply:

a. where a source substation operates, under Normal Running Arrangements, with open point(s) on the lower voltage busbar such that there are separate sections of the busbar that are not electrically connected at the same voltage as the busbar, then these separate sections of busbar, and their associated network, shall be considered as separate Network Groups; and
b. where multiple source substations, with the same lower voltage of transformation assets, operate in parallel, under Normal Running Arrangements, through network operating at the same voltage as the

lower voltage of the transformation assets, then these substations and their associated network shall be considered as a single Network Group.

6.4 Where a Network Group has, under Normal Running Arrangements:

a. no demand (load) or demand (generation) connected either within the Network Group, or any lower voltage Network Group associated with it; and

b. the Network Group exists solely for the purposes of providing security of supply support to an adjacent Network Group, through closure of open point(s) between such Network Groups,

then such Network Groups shall be considered as part of the adjacent Network Group to which they provide security of supply support (an example of such instances would be Network Groups that would otherwise be associated with transformers that operate on 'hot standby' under Normal Running Arrangements).

6.5 The demand (load or generation) that is considered to be associated with each Network Group is the demand that is connected within the Network Group and also within any lower voltage Network Group that is connected the source Network Group under Normal Running Arrangements.

6.6 Figure 8 shows an example network broken down into a number of Network Groups. This example shows how individual Network Groups may include multiple source substations. This is illustrated by the Level 2 group shown as BSP Group 1. In this example both BSP1 and BSP2 are Source Substations which are encompassed within a single Network Group, due to operation of an interconnected 33kV network between these substations under Normal Running Arrangements.

6.7 Separate Network Groups may be physically connected by circuits but under Normal Running Arrangements there are no flows between the Network Groups either by means of a normally open switch or normally open circuit breaker. Figure 9 shows the same example network as seen in Figure 8 except now the 33kV circuit interconnection between BSP 1 and BSP 2 is run open, creating two level 2 BSP Network Groups, where previously there was only one, with their own separate Source Substations.

6.8 Not all network levels discussed above are applicable across Great Britain with respect to the FCP methodology. In Scotland for example only Level 2 and Level 3 Network Groups are considered as voltages above 33kV are considered transmission and so are not included in the distribution pricing models. In England and Wales all three levels (Level 1, Level 2 and Level 3) as shown in (Figure 9) are considered, although depending on the network voltage transformations the Level 2 Network Group may not be present in some cases, as shown at Primary 5. In this case Primary 5's voltage transformation converts 132kV straight to 11kV and hence there is no intermediate distribution through a BSP, Level 2.

Figure 8 - Example network showing three levels of Network Groups

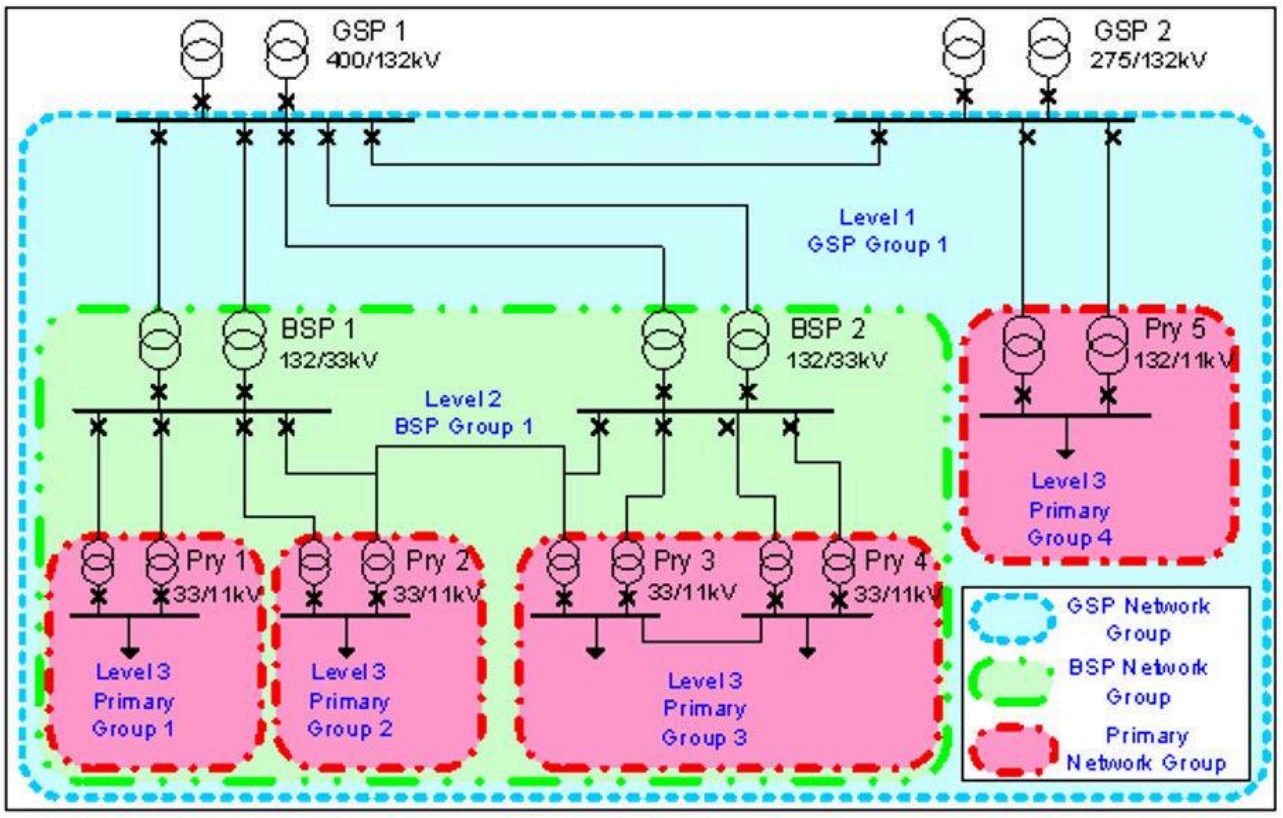

Figure 9 - Example network similar to Figure 8 showing that the addition of the Normally Open Point (NOP) has created two level 2 BSP Network Groups

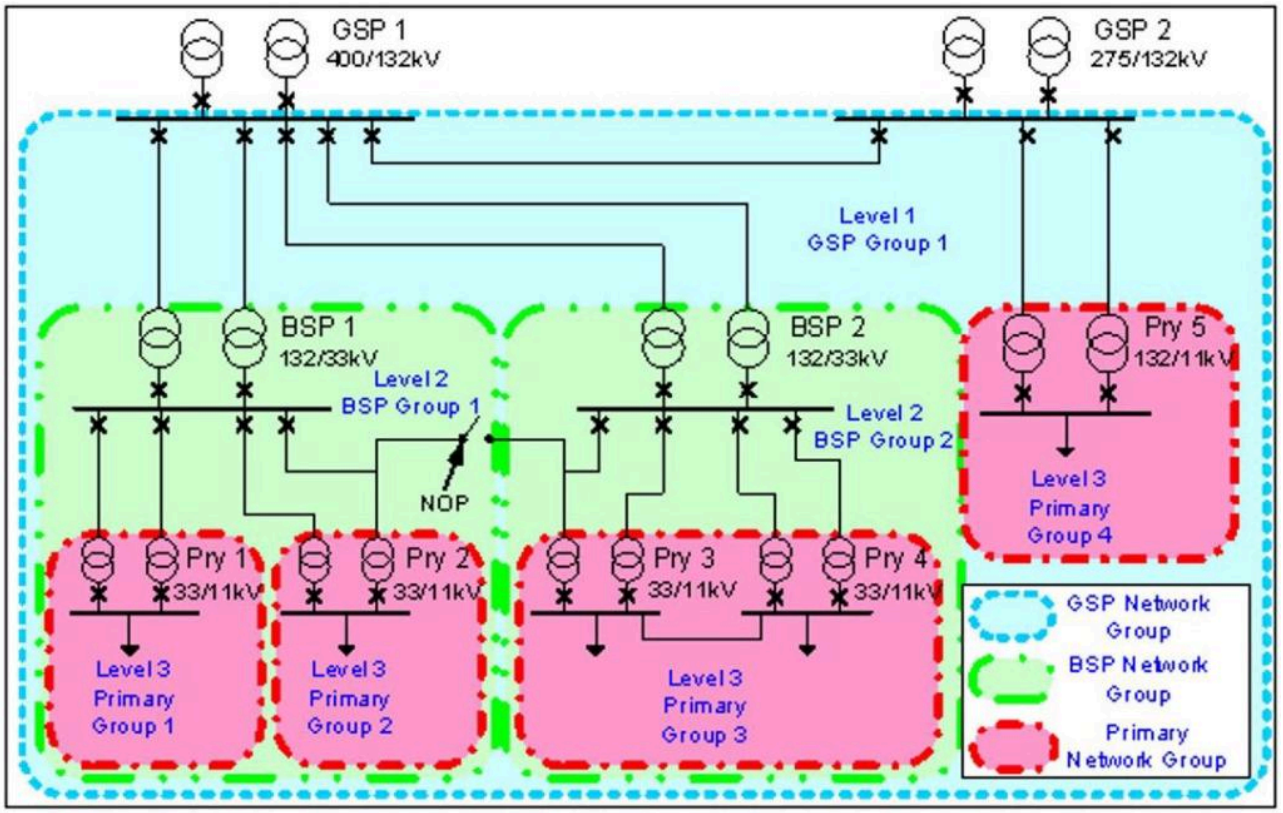

7. POWER FLOW ANALYSIS PROCESS

7.1 This section 7 describes the power flow analysis undertaken for pricing purposes. The purpose of power flow analysis is to determine when overloads occur on the Authorised Network Model caused by forecast changes in demand (load) in each Network Group using Contingency Analysis. Each overloaded chargeable Branch will then in turn be given a reinforcement cost which will be used in the calculation of Network Group incremental charges using the FCPload formula as shown in section 9 below (Calculation of Network Group Incremental Charges). The power flow is also known as Demand (Load) Analysis.:

7.2 Figure 10 shows a flow chart for the FCP methodology showing the overall processes and stages.

Figure 10 - Flowchart of the FCP pricing model

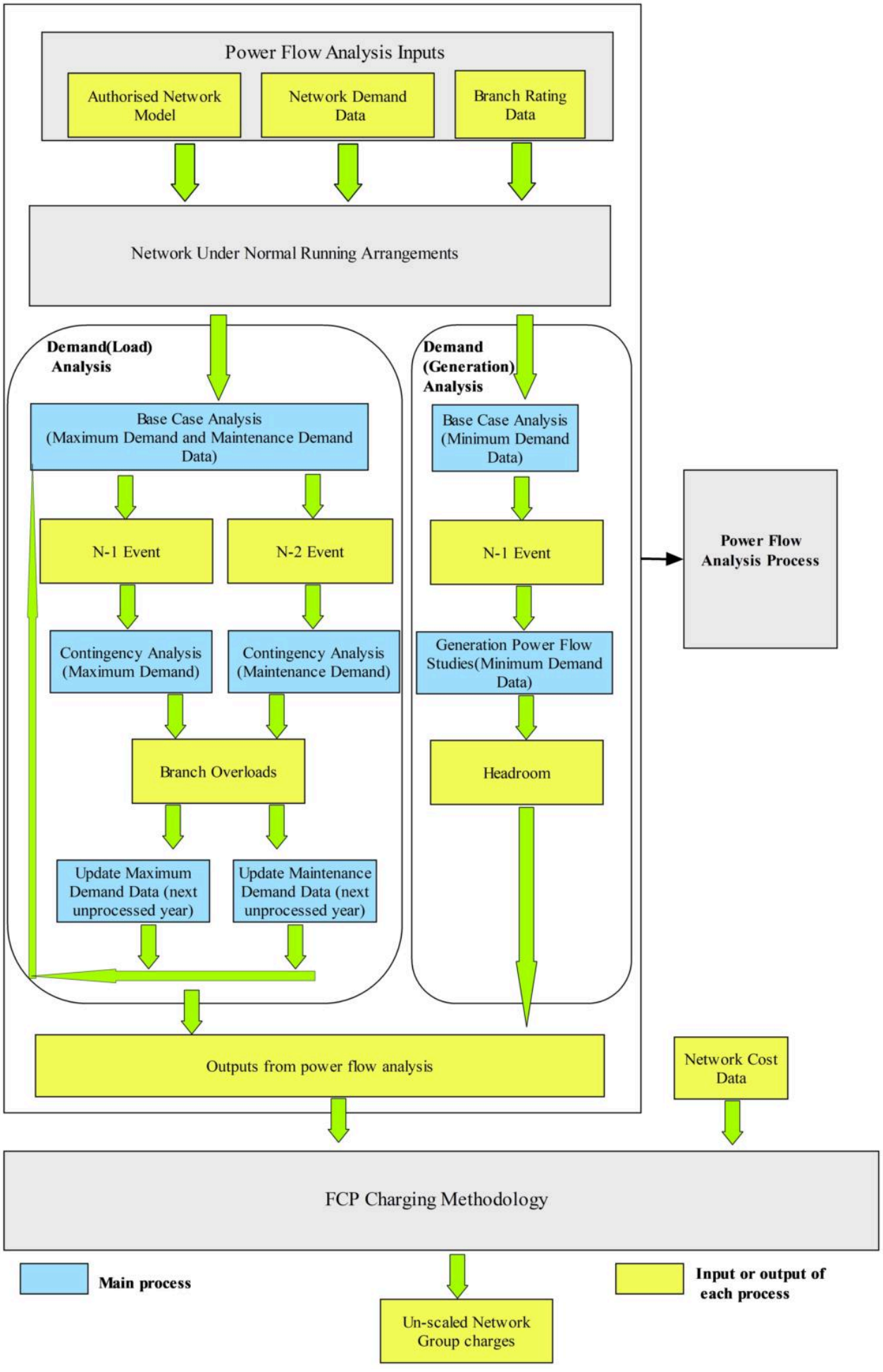
Power Flow Analysis Inputs
Authorised Network Model
Network Demand Data
Branch Rating Data
Network Under Normal Running Arrangements
Demand(Load) Analysis
Demand (Generation) Analysis
Base Case Analysis (Maximum Demand and Maintenance Demand Data)
Base Case Analysis (Minimum Demand Data)
N-1 Event
N-2 Event
N-1 Event
Power Flow Analysis Process
Contingency Analysis (Maximum Demand)
Contingency Analysis (Maintenance Demand)
Generation Power Flow Studies(Minimum Demand Data)
Branch Overloads
Headroom
Update Maximum Demand Data (next unprocessed year)
Update Maintenance Demand Data (next unprocessed year)
Outputs from power flow analysis
Network Cost Data
FCP Charging Methodology
Main process
Input or output of each process
Un-scaled Network Group charges

Demand (Load) Analysis

7.3 This section examines the processes for identifying overloads and their respective timings by analysing the Authorised Network Model in succession over a 10-year period starting from the Regulatory Year for which the Use of System Charges are being calculated. During this analysis only changes in demand (load) are modelled over the 10-year period.

Contingency Analysis

7.4 In line with planning standards for network security[1] Contingency Analysis is undertaken to identify the assets in each Network Group that will require reinforcement; this is achieved using AC load flow studies. The objective of the Contingency Analysis is to identify the Branches that require reinforcement and to determine the time (years) to reinforcement.

[1] Network security is a licence condition embodied in ER P 2/6

7.5 The Contingency Analysis is based on all credible outages that could affect the DNO Party's Distribution System. Both N-1 Events and where necessary, N-2 Events are modelled and the consequential network actions required to meet the security of supply requirements of ER P2/6 and the agreed level of security of supply to individual Connectees. For example, where appropriate, it may include constraints in distributed generation output, customer demand reductions, automatic switching schemes and manual switching. Such switching operations may include the transfer of demand or generation, as appropriate. For the N-1 Contingencies the model is set up using the Maximum Demand Data and appropriate Branch Ratings. For the N-2 Contingencies the N-2 Event is assumed to take place at the same time as a planned outage and therefore the Maintenance Demand Data and appropriate Branch Ratings are used. Only N-2 Events applicable to ER P2/6 demand class E[2] shall be considered within the Contingency Analysis, where the assessment of demand class is performed based upon the in the Regulatory Year for which the Use of System Charges are being calculated.

[2] ER P2/6 specifies the normal level of system security for distribution networks, classified in ranges of group demand. ER P2/6 Class E specifies the security of supply requirements where the group demand is classified as over 300MW and up to 1500MW

7.6 The N-1 and N-2 Contingency Analyses are repeated for each year of the specified 10 year planning period as shown in Figure 10. The timing for each overloaded Branch is determined from these analyses as described in Figure 11 (see Demand (Load) Analysis block). The overloaded Branches are identified by running the appropriate N-1 or N-2 Contingency Analyses on the networks populated by Maximum Demand Data or Maintenance Demand Data, respectively. If any of these two analyses cause a Branch overload for the considered year u, the time to reinforcement of the Branch is set to Y=u. If a Branch overload is identified in both analyses the time to reinforcement is set to the earliest year the overload is found.

7.7 As the load flow analysis progresses through the 10-year planning period the same reinforcements will be identified and to avoid double counting of reinforcements only new Branch reinforcements each year are considered. It should be noted that the network model is static and hence not updated if a reinforcement is required.

7.8 The outputs from the Contingency Analysis will include all EHV network Branches which are overloaded, which Network Group they belong to, the time at which they were overloaded and the demand (load) that causes the overload.

Figure 11 - Reinforcements considered over the 10 year planning period

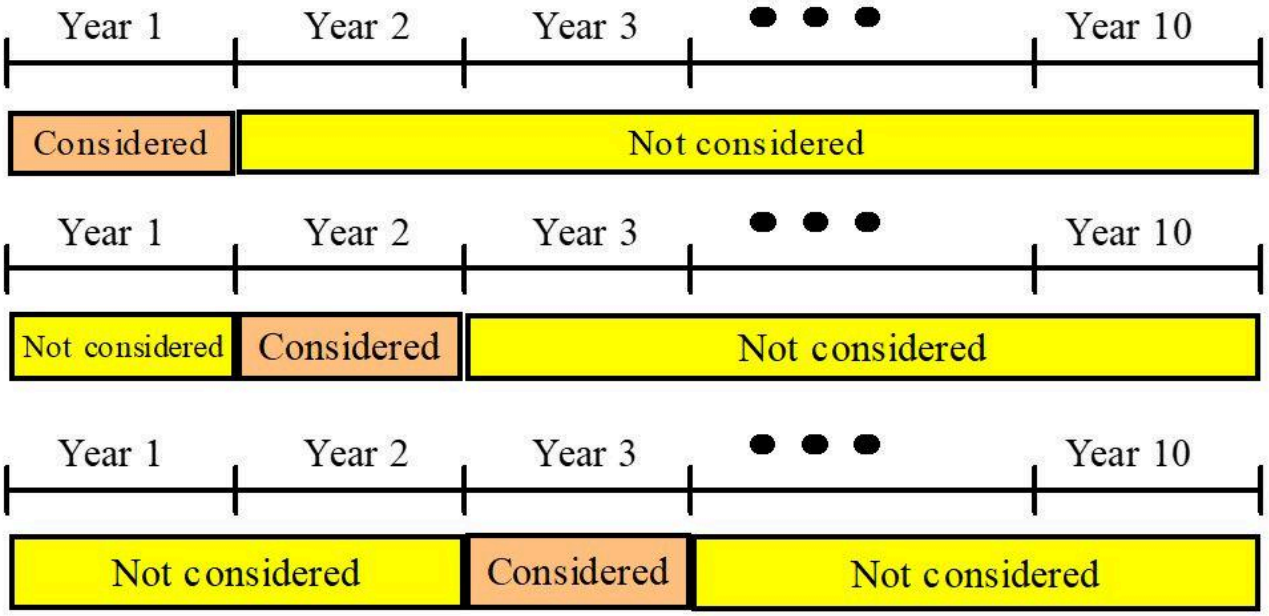

8. CALCULATION OF REINFORCEMENT COSTS

8.1 The calculation of Network Group incremental charges for demand (load/) is based on the outputs obtained from the power flow analysis process which is discussed in the section 9 (Calculation of Network Group incremental charges) below (see Figure 12).

8.2 Using the results of the power flow analysis and reinforcement costs, Network Group incremental charges for demand (load/) can be calculated based on the formulae presented in section 9 (Reinforcement Cost Calculation Principles) below. The main principles for the calculation of reinforcement costs are given in section 8.3 (Reinforcement Cost Calculation Principles) below.

Reinforcement Cost Calculation Principles

8.3 These are general principles for the calculation of the reinforcement costs:

a. Each Branch within the Authorised Network Model should be considered as being one of three types:-

i. Transformer Branches - which represent Branches at substations that provide transformation between different voltage levels.
ii. Circuit Branches - which represent an interconnection (or part of an interconnection) between substations and which operate at a single voltage level.
iii. Zero-cost Branches - these Branches exist in the network model but have zero reinforcement costs.

b. Zero-cost Branches shall include, but not be limited to:-

i. Branches that represent assets that are not part of the DNO Party's Distribution System for which marginal costs are being calculated e.g. sections of the National Electricity Transmission System, adjacent Distribution Systems etc.
ii. Branches that represent Sole Use Assets.
iii. Branches that represent internal connections within substations, other than installed transformation (e.g. bus couplers, bus section circuit breakers etc.)

c. The cost of reinforcement for a Branch shall be constructed from typical unit costs appropriate to the categorisation of the Branch and the components represented.
d. The typical unit costs used to derive the cost of reinforcement for a Branch shall:

   i. reflect the modern equivalent asset value of reinforcing the particular asset;
   ii. include overheads directly related to the construction activity;
   iii. include building and civil engineering works, in unmade ground.

e. A cost of reinforcement shall be allocated to each Transformer Branch and Circuit Branch taking account where possible of:

   i. the voltage of operation of the Circuit (or in the case of Transformer Branches, the voltages of transformation);
   ii. the existing mix of overhead line and underground cable within Circuit Branches;
   iii. the requirements and costs of similar historic reinforcement projects.

f. The costs associated with substation plant and equipment (such as circuit breakers, switches, protection equipment, earthing devices etc.) shall be included within the cost of reinforcement and allocated appropriately across the Transformer Branches and Circuit Branches to which they relate.
g. The typical unit costs used to derive the cost of reinforcement for a Branch shall:

   i. reflect the modern equivalent asset value of reinforcing the particular asset;
   ii. include overheads directly related to the construction activity;
   iii. include building and civil engineering works, in unmade ground.

Branch Rating Data

8.4 Each Branch in the Authorised Network Model needs to be assigned a Branch Rating appropriate to each analysis scenario considered. Where a Branch represents a number of components (for instance, a number of sections of overhead line and/or underground cable) then the rating of that Branch is calculated by looking at the ratings of all the subcomponents and determining the lowest value. The rating of a transformer shall be the capability of the transformer to supply load at its secondary terminals.

9. CALCULATION OF NETWORK GROUP INCREMENTAL CHARGES

FCP load incremental charge

9.1 In each Network Group reinforcements within a 10-year horizon are identified. Reinforcements that are a part of lower voltage Network Groups are excluded. From Figure 8 it can be seen that:

a. In the GSP Network Group (Level 1) the Branches that are considered for reinforcement are only the EHV Branches connecting the GSPs to the BSPs, the transformers connected to the GSPs are transmission Branches and so not included in the EDCM. All of the other network Branches fall into the lower voltage Network Groups (Level 2 and Level 3).
b. In the BSP Network Groups (Level 2) incremental charges are derived from the reinforcement costs of the BSP transformers and the outgoing Network Group Branches.
c. In the Primary Network Groups (Level 3) incremental charges are derived from the reinforcement costs related only to the Primary transformer as the 11kV circuits are not considered in the EDCM.

9.2 The following charging function is used to derive the Network Group incremental charge (£/kVA/annum) for demand (load):

$$FCP_{load} = \sum_{j} \frac{i\left(\frac{A_j}{C_l}\right)\left(\frac{D}{C_l}\right)^{\frac{2i}{g_l}-1}}{1-e^{-iT}}$$

Where:

FCP_{load}	=	FCP load incremental charge (£/kVA/annum)
j	=	index of Branch whose reinforcement is required in the planning period
i	=	discount rate, which is set to equal the latest pre-tax real weighted average cost of capital (CC below) for each DNO Party calculated using the following formula: CC = (Gearing Assumption x Pre-Tax Cost of Debt) + (1- Gearing Assumption)*(Post Tax Cost of Equity/(1-Corporation Tax Rate)) where: Gearing Assumption is set to the 'Notional gearing' value for the regulatory year for which tariffs are being set in the latest version of the PCFM (InputSummary sheet, Finance inputs, Vanilla allowed return on capital) prepared for the relevant DNO Party for publication with such tariff setting on the DNO Party's website; Pre-Tax Cost of Debt is set to the 'Allowed return on debt' value for the regulatory year for which tariffs are being set in the latest version of the PCFM (InputSummary sheet, Finance inputs, CAPM calculator tool: allowed return on debt) prepared for the relevant DNO Party for publication with such tariff setting on the DNO Party's website; Post Tax Cost of Equity is set to the 'Allowed return on equity' value for the regulatory year for which tariffs are being set in the latest version of the PCFM (InputSummary sheet, Finance inputs, CAPM calculator tool: allowed return on equity) prepared for the relevant DNO Party for publication with such tariff setting on the DNO Party's website; and Corporation Tax Rate is set to the 'Corporation tax rate' value for the regulatory year for which tariffs are being set in the latest version of the PCFM (InputSummary sheet, Tax, Tax policy) prepared for the relevant DNO Party for publication with such tariff setting on the DNO Party's website. In the event of any value not being available from the above data sources, the DNO Party will prepare a forecast of the value to be used in the CC formula instead. The CC value is calculated as a percentage, and rounded to two decimal places.
A_j	=	total cost (£) of asset "j" reinforcement in the considered Network Group over 10-year period
I	=	index of the total load level at which reinforcement of Branch "j" is required
C_I	=	total demand (kVA) of the Network Group, in the Maximum Demand Scenario, in the year YI in which reinforcement of Branch "j" is required
D	=	total demand (kVA) in the Network Group in the first year of the 10-year horizon in the Maximum Demand scenario
g_I	=	annual average load growth rate corresponding to the year in which the reinforcement is expected to be required (see below)
T	=	10 years over which the reinforcement cost is recovered

9.3 The annual average load growth rate corresponding to the year in which the reinforcement is expected to be required generic Network Group load growth rate, g_I, is calculated by:

$$g_I = \frac{ln\left(\frac{C_I}{D}\right)}{Y_I}$$

Where:

g_I	=	annual average load growth rate corresponding to the year in which the reinforcement is expected to be required
Y_I	=	number of years before the reinforcement of Branch "j" is required
C_I	=	total demand (kVA) of the Network Group, in the Maximum Demand Scenario, in the year Y_I in which reinforcement of Branch "j" is required

D	=	total demand (kVA) in the Network Group in the first year of the 10-year horizon in the Maximum Demand scenario

Hybrid groups

9.4 This scenario necessitates that a hypothetical, hybrid Network Group, which represents a composite of the 'parent' groups, is constructed for the purpose of setting incremental charges. The demand and generation incremental charges for a hybrid Network Group should be calculated by aggregating the incremental charges of all constituent Network Groups weighted by the demands supplied to the downstream Network Group.

9.5 Consider the following:

a. a Primary Substation (Level 3) Network Group, PRY, that is supplied from two separate BSP (Level 2) Network Groups, BSP1 and BSP2;
b. transformers T1 and T3 at PRY are supplied from BSP1 and transformer T2 is supplied from BSP2. The power flows through T1, T2 and T3 are D_{PRY}^{T1}, D_{PRY}^{T2} and D_{PRY}^{T3} under Normal Running Arrangements; and
c. the incremental charge (Charge 1) associated with Network Group BSP1 is FCP_{BSP1} and the incremental charge associated with BSP2 is FCP_{BSP2}.

9.6 The incremental charge (Charge 1) for the hybrid 'parent' group supplying PRY is given by:

$$FCP_{hybrid} = \frac{(FCP_{BSP1} * (D_{PRY^{T1}} + D_{PRY^{T3}})) + (FCP_{BSP2} * D_{PRY^{T2}})}{D_{PRY^{T1}} + D_{PRY^{T2}} + D_{PRY^{T3}}}$$

Where:

FCP_{hybrid}	=	'hybrid' parent group incremental charge
FCP_{BSP1}	=	incremental charge associated with Network Group BSP1
D_{PRY}^{T1}	=	demand recorded at T1 at Primary Substation PRY
D_{PRY}^{T3}	=	demand recorded at T3 at Primary Substation PRY
FCP_{BSP2}	=	incremental charge associated with Network Group BSP2
D_{PRY}^{T2}	=	demand recorded at T2 at Primary Substation PRY

ATTACHMENT 1 - CALCULATION OF NETWORK GROUP LOAD INCREMENTAL CHARGES – A SIMPLE EXAMPLE

1 A small network example is shown below (Figure 12) to illustrate the calculation of Network Group incremental charges for demand (load).

2 The shown network consists of a single GSP Network Group (Level 1 shown in red) that contains two BSP Network Groups (denoted as BSP_A and BSP_D shown in green) (Level 2). For the sake of simplicity and brevity the calculation is carried out assuming that the network is split only into Level 1 and Level 2 (ignoring Level 3) Network Groups. The calculation principles described in this example can be similarly 'extended' to Level 3 Network Groups.

3 There are five reinforcements identified for this small network through a power flow analysis discussed in section 7 (Power flow analysis process) of Annex 1 - Implementation Guide. These reinforcements are: a 132 kV line between 'GSPB10' and 'GENB10' and two primary transformers in each Level 2 Network Group. The required reinforcements and the year when these would be required are shown in the figure below.

Figure 12 Example of charging by Network Groups

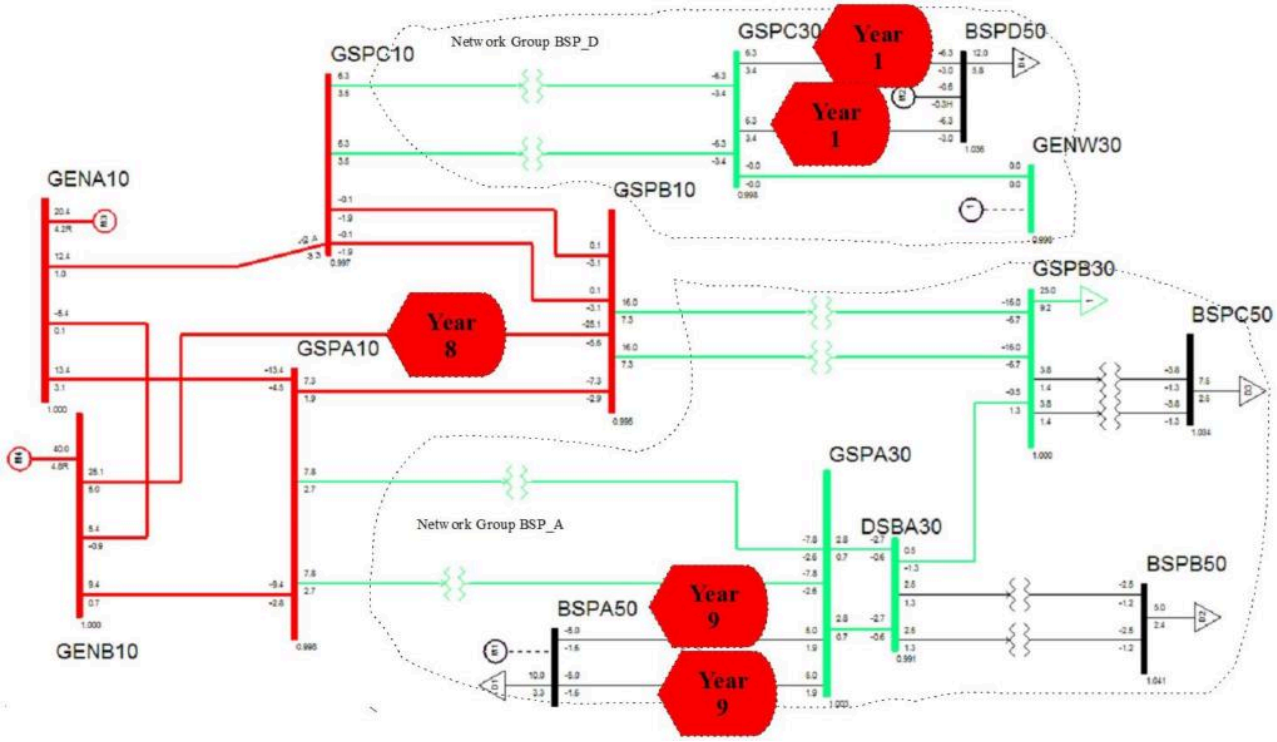

4 The calculation of Network Group incremental charges is summarised in **(Table 8)** for demand connected to 132 kV and in **Table 8A** for demand connected within BSP_A and BSP_D. The calculation is based on the formula given in paragraph 1.16 of the Authority's Decision Document (ref: 90/09, Annex 2):):

$$FCP = \frac{i\left(\frac{A}{C}\right)\left(\frac{D}{C}\right)^{\frac{2i}{g}-1}}{1-e^{iT}} = 0.134786 * \left(\frac{A}{C}\right)\left(\frac{D}{C}\right)^{\frac{2i}{g}-1}$$

Where:

i	is a discount rate,
T	10 years,
A	is the Branch reinforcement cost (£),

C	is demand (MVA) of the Network Group at which each reinforcement would be required,
D	is initial demand (MVA) in the Network Group and
G	is demand growth rate calculated from the formulae given in Attachment 1 - Calculation of Network Group Load incremental charges - A Simple Example, specifically:

$$\frac{\ln(\frac{C}{D})}{Y}$$

where Y is the number of years into the future when reinforcement is required.

5 The implementation of the formula given above is described in a number of steps in Tables 8 and 8A below.

6 Both tables are split into two parts, the shaded one which contains information on:

- Network Group name;
- Network Group incremental charge for reinforcements within the Network Group;
- Network Group incremental charge for reinforcements in the parent Network Group;
- Total Network Group incremental charge;
- C and D.

The second part (non-shaded) is a decomposition of the Network Group incremental charge with respect to each reinforcement, where a 'reinforcement share' in the Network Group incremental charge is calculated.

7 The Network Group incremental charge for Level 1 Network Group is 3.24 £/kVA/annum due to the cost of the 132 kV reinforcement of £4,125,000.

8 The Network Group incremental charges for Level 2 consist of the corresponding incremental charge due to reinforcements identified in the Network Group (BSP_A 1.28 £/kVA/annum, BSP_D 9.18 £/kVA/annum) and the incremental charge calculated for the corresponding higher level, which is 3.24 £/kVA/annum. The combined Network Group incremental charge for BSP_A is a sum of 1.28 £/kVA and 3.24 £/kVA/annum, which is 4.52 £/kVA/annum. Similarly, for Network Group BSP_D the combined Network Group incremental charge is 12.42 £/kVA/annum.

Table 8 – Network Group incremental charge for Level 1 Network Group

Network Group	**Network Group charge (£/kVA/annum)**	**Higher Level charge (£/kVA/annum)**	**Combine charge (£/kVA/annum)**	**Demand [MVA]**	**Incremental charge decomposition**				
GSP	3.24	0	3.24	D=63.94 C=67.04 (Year 8)	Branch Cost - *A*[£]	Timing [years]	(A/C)	(D/C)^(2i/g-1)	Branch Share (footnote) [£/kVA/annum]
					4125000	8	61530	0.389	3.24

Table 8A - Network Group incremental charge for Level 2 Network Group.

Network Group	Network Group charge (£/kVA/annum)	Higher Level charge (£/kVA/annum)	Combined charge (£/kVA/annum)	Demand [MVA]	Incremental charge decomposition				
BSP_A	1.28	3.24	4.52	D=50.6 C=52.6 (Year 9)	Branch Cost -*A*[£]	Timing [years]	(A/C)	(D/C)^(2i/g-1)	Branch Share [£/kVA/annum]
					727600	9	13832.7	0.345	0.64
					727600	9	13832.7	0.345	0.64
BSP_D	9.18	3.24	12.42	D=13.33 C=13.46 (Year 1)	Branch Cost -*A*[£]	Timing [years]	(A/C)	(D/C)^(2i/g-1)	Branch Share [£/kVA/annum]
					509200	1	37830.6	0.9	4.59
					509200	1	37830.6	0.9	4.59

ATTACHMENT 3 - OUTPUT RESULTS

1 The final outputs of the work outlined in this Schedule are Network Group incremental charges for demand (load). These are not however the final Use of System Charges and further calculations under EDCM are required to derive the final Use of System Charges.

2 The output data listed in table 3 below are the minimum necessary for the calculation of the final EDCM Customer Use of System Charges. To 'link' Network Groups and Nodes representing demand (load) additional 'mapping' tables might be required.

3 It should be pointed out that the other information used to derive the output data will be retained for the interests of transparency.

Table 3 – Output information required to calculate final EDCM Use of System Charge

Item	Item Name	Details
1	Network Group ID	Unique identifier of the Network Group
2	Charge 1: Demand (load) Use of System Charge (£/kVA/annum)	Network Group incremental charge for demand (load)
4	Parent ID	Identifier of the higher voltage Network Group immediately associated with the Network Group described by Item 1[1]
5	Active Power (kW) of Demand (Load) for Maximum Demand Scenario.	The total kW demand (load) connected to the Network Group (negative value) in the Maximum Demand Scenario
6	Reactive Power (kVAr) of Demand (Load) for Maximum Demand Scenario	The total kVAr demand (load) connected to the Network Group in the Maximum Demand Scenario[2]
9	Active Power (kW) of Demand (Generation) for Maximum Demand Scenario	The total kW demand (generation) connected to the Network Group (positive value) in the Maximum Demand Scenario
10	Reactive Power (kVAr) of Demand (Generation) for Maximum Demand Scenario	The total kVAr demand (generation) connected to the Network Group in the Maximum Demand Scenario[8]

[1] Where there is no higher voltage Network Group associated with the Network Group described by Item 1 (i.e. it is a GSP level Network Group), then the Parent ID field should be left blank.

[2] Where the current calculated for demand lags its voltage the reactive power shall be allocated the same sign as the active power. Where the current calculated for demand leads its voltage the reactive power shall be allocated the opposite sign to the active power.

4 The demand (load) information that is provided as part of the output information (Active Power (kW) of Demand (Load) for Maximum Demand Scenario and Reactive Power (kVAr) of Demand (Load) for Maximum Demand Scenario) shall be determined by summation of the demands (load) modelled at all Nodes within the Network Group and any associated lower voltage Network Group(s).

5 The demand (generation) information that is provided as part of the output information (Active Power (kW) of Demand (Generation) for Maximum Demand Scenario and Reactive Power (kVAr) of Demand (Generation) for Maximum Demand Scenario) shall be determined by summation of the demands (generation) modelled at all Nodes within the Network Group and any associated lower voltage Network Group(s).

[1] Where there is no higher voltage Network Group associated with the Network Group described by Item 1 (i.e. it is a GSP level Network Group), then the Parent ID field should be left blank.

[2] Where the current calculated for demand lags its voltage the reactive power shall be allocated the same sign as the active power. Where the current calculated for demand leads its voltage the reactive power shall be allocated the opposite sign to the active power.

Annex 2 - Derivation of FCP charging formulae

The basis of the Forward Cost Pricing (FCP) methodology for demand is to set incremental charges so as to recover the expected reinforcement costs from the contributing demand over the 10-year period prior to the forecast time of reinforcement. The revenue is assumed to be invested at the discount rate. Costs and incremental charges are determined for each Network Group separately. The charging formulae below are first derived for the reinforcement of a single asset (Branch). The final incremental charge rates result from the reinforcement costs of several assets, the cost being apportioned between the Network Group in which the reinforcement is forecast and the Network Groups at lower voltage levels connected to this Network Group.

Demand charging formula

Consider an asset subject to a current demand D in kVA where D grows continuously at a rate of g:

$$D(t) = D \cdot exp(g \cdot t) \qquad (1)$$

Suppose reinforcement would be required when the demand reaches a capacity of C (kVA), i.e. D(t)=C. Then the time t till reinforcement is required is given by:

$$t = \frac{ln\left(\frac{C}{D}\right)}{g} \qquad (2)$$

Assume a discount rate of i, then applying the discount rate continuously (rather than in annual increments) to asset cost A gives a present value of the asset of:

$$PV = A \cdot exp(-i \cdot t) \qquad (3)$$

The marginal change in PV with respect to the demand D is given by differentiating expression (3), applying chain rule and using expression (2):

$$\frac{dPV}{dD} = \frac{dPV}{dt}\frac{dt}{dD} = -i \cdot A \cdot exp(-i \cdot t) \cdot \left[\frac{1}{g\left(\frac{C}{D}\right)}(-CD^{-2})\right] = \left(\frac{i}{g}\right)\left(\frac{A}{D}\right)exp(-i \cdot t) \qquad (4)$$

To obtain an annual rate (£/kVA/annum) the marginal charge in £/kVA needs to be annuitised. There is no unique way of calculating the annuity factor as new payments are calculated each year. One solution is to assume NPV approach, that is, apply continuous discounting factor, and spread the incremental charge over the total time T between reinforcements (during which reinforcement incremental charges may be levied). The “annuity factor” α is then calculated as:

$$\alpha = exp(-i \cdot t)/T \qquad (5)$$

and the annuitised marginal charge is obtained by multiplying (4) and (5):

$$p(t) = \frac{\left(\frac{i}{g}\right)\left(\frac{A}{D}\right)exp(-2i \cdot t)}{T}\ £/kVA/annum \qquad (6)$$

The basic principle of the FCP approach is to ensure that the total revenue recovered over the 10 year period prior to reinforcement is equal to the cost of reinforcement. The total recovered revenue is calculated by multiplying the annuitised marginal charge by demand and revaluing to the time of reinforcement (i.e. applying the continuous “future value” factor):

$$\int_0^{T=10} p(t) \cdot D \cdot exp(it)dt \qquad (7.1)$$

which gives upon substitution of expression (6):

$$\int_0^{T=10} \frac{\left(\frac{i}{g}\right)\left(\frac{A}{D}\right)exp\left(-2i \cdot t\right)}{T \cdot D \cdot exp(it)}dt = \frac{A}{gT}\left[1 - exp\left(-10i\right)\right] \qquad (7.2)$$

The total recovered cost (7.2) shall be equal to asset cost A, so the marginal charge (6) needs to be scaled by factor [1-exp(-10i)]/gT first and then time t from expression (2) substituted giving the FCP demand formula:

$$FCP_{load} = \frac{i\left(\frac{A}{D}\right)exp(-2it)}{[1 - exp(-10i)]} = \frac{i\left(\frac{A}{D}\right)exp\left[-2i \cdot ln\left(\frac{C}{D}\right)^{\frac{1}{g}}\right]}{[1 - exp(-10i)]} = \frac{i\left(\frac{A}{C}\right)\left(\frac{D}{C}\right)^{\frac{2i}{g}-1}}{[1 - exp(-10i)]}\ £/kVA/annum \qquad (8)$$

In applying this formula to a reinforcement within a Network Group, C refers to the total kVA within the Network Group at which reinforcement would be required and similarly D refers to the current total kVA within the Network Group across which the cost is shared.

Each Network Group is studied over the planning period of 10 years and several reinforcements are likely to be required. The demand charging formula can then be written for the Network Group as:

$$FCP_{load} = \sum_j \frac{i\left(\frac{A_j}{C_l}\right)\left(\frac{D}{C_l}\right)^{\frac{2i}{gl}-1}}{(1 - e^{-iT})}£/kVA/annum \qquad (9)$$

where:

j is index of Branch asset whose reinforcement is required in the planning period;

i is the discount rate, which is set to equal the latest pre-tax real weighted average cost of capital (CC below) for each DNO Party calculated using the following formula:

CC=(Gearing Assumption x Pre-Tax Cost of Debt) + (1- Gearing Assumption)*(Post Tax Cost of Equity/(1-Corporation Tax Rate))

where:

- Gearing Assumption is set to the 'Notional gearing' value for the regulatory year for which tariffs are being set in the latest version of the PCFM (InputSummary sheet, Finance inputs, Vanilla allowed return on capital) prepared for the relevant DNO Party for publication with such tariff setting on the DNO Party's website;

  Pre-Tax Cost of Debt is set to the 'Allowed return on debt' value for the regulatory year for which tariffs are being set in the latest version of the PCFM (InputSummary sheet, Finance inputs, CAPM calculator tool: allowed return on debt) prepared for the relevant DNO Party for publication with such tariff setting on the DNO Party's website;

- Post Tax Cost of Equity is set to the 'Allowed return on equity' value for the regulatory year for which tariffs are being set in the latest version of the PCFM (InputSummary sheet, Finance inputs, CAPM calculator tool: allowed return on equity) prepared for the relevant DNO Party for publication with such tariff setting on the DNO Party's website; and

- Corporation Tax Rate is set to the 'Corporation tax rate' value for the regulatory year for which tariffs are being set in the latest version of the PCFM (InputSummary sheet, Tax, Tax policy) prepared for the relevant DNO Party for publication with such tariff setting on the DNO Party's website.

- In the event of any value not being available from the above data sources, the DNO Party will prepare a forecast of the value to be used in the CC formula instead.

- The CC value is calculated as a percentage, and rounded to two decimal places.

Aj is the total cost (£) of asset j reinforcement in the considered Network Group;

l is index of the total load level at which reinforcement of asset j is required;

Cl is total demand (kVA) of the Network Group in the year Yl in which reinforcement of asset j is required;

D is initial total demand (kVA) in the Network Group;

gl is demand growth rate calculated from *ln(Cl/D) / Yl* where Yl is the number of years into the future when reinforcement of asset j is required;

T is the 10 year period over which the reinforcement cost is recovered.

SCHEDULE 18: EHV CHARGING METHODOLOGY (LRIC MODEL)

1. INTRODUCTION

1.1 This Schedule 18 sets out one, of the two, EHV Distribution Charging Methodologies (**EDCM**). The other EDCM is set out in Schedule 17.

1.2 This Schedule 18 sets out the methods, principles, and assumptions underpinning the EDCM for the calculation of Use of System Charges by the DNO Parties with the following Market Domain I.D.s:

- EELC;
- NORW;
- LOND;
- NEEB;
- YELG;
- SEEB;
- SWAE; and
- SWEB.

1.3 In order to comply with this methodology statement when setting distribution Use of System Charges the DNO Parties referred to above will populate the following EDCM model versions:

a. for charges effective from 1 April 2020:

i. where the Authority has given no direction under Clause 19.1B, EDCM model version LRIC v3 as issued by the Panel in accordance with Clause 14.5.3; or
ii. where the Authority has given direction under Clause 19.1B that periods of notice described in Clause 19.1A need not apply, EDCM model version LRIC v3(332) as issued by the Panel in accordance with Clause 14.5.3;

b. for charges effective from 1 April 2021:

i. where the Authority has given no direction under Clause 19.1B, EDCM model version LRIC v7 as issued by the Panel in accordance with Clause 14.5.3; or
ii. where the Authority has given direction under Clause 19.1B that periods of notice described in Clause 19.1A need not apply, EDCM model version LRIC v7(379) as issued by the Panel in accordance with Clause 14.5.3; or

c. or charges effective from 1 April 2022 or later:

i. where the Authority has given no direction under Clause 19.1B, EDCM model version LRIC v9 as issued by the Panel in accordance with Clause 14.5.3; or
ii. where the Authority has given direction under Clause 19.1B that periods of notice described in Clause 19.1A need not apply, EDCM model version LRIC v10 as issued by the Panel in accordance with Clause 14.5.3.

Main steps

1.4 The EDCM involves four main steps.

1.5 Step 1 is the application of load flow techniques and the LRIC or FCP methodologies to determine an EDCM tariff element, known as Charge 1, which represents costs associated with demand-led reinforcement, estimated by reference to power flows in the maximum demand scenario.

1.6 Step 2 involves the allocation of DNO Party costs to Connectees using appropriate cost drivers.

1.7 Step 3 adds a scaling element to charges which is related to Allowed Revenue.

1.8 Step 4 uses CDCM charges to determine the element of portfolio charges to be applied in the case of DNO/IDNO Parties who are supplied from the DNO Party's network at voltages higher than the scope of CDCM charges.

1.9 Figure 1 provides a diagrammatic overview of the steps involved for import charges.

Figure 1 Diagrammatic overview of the EDCM for import

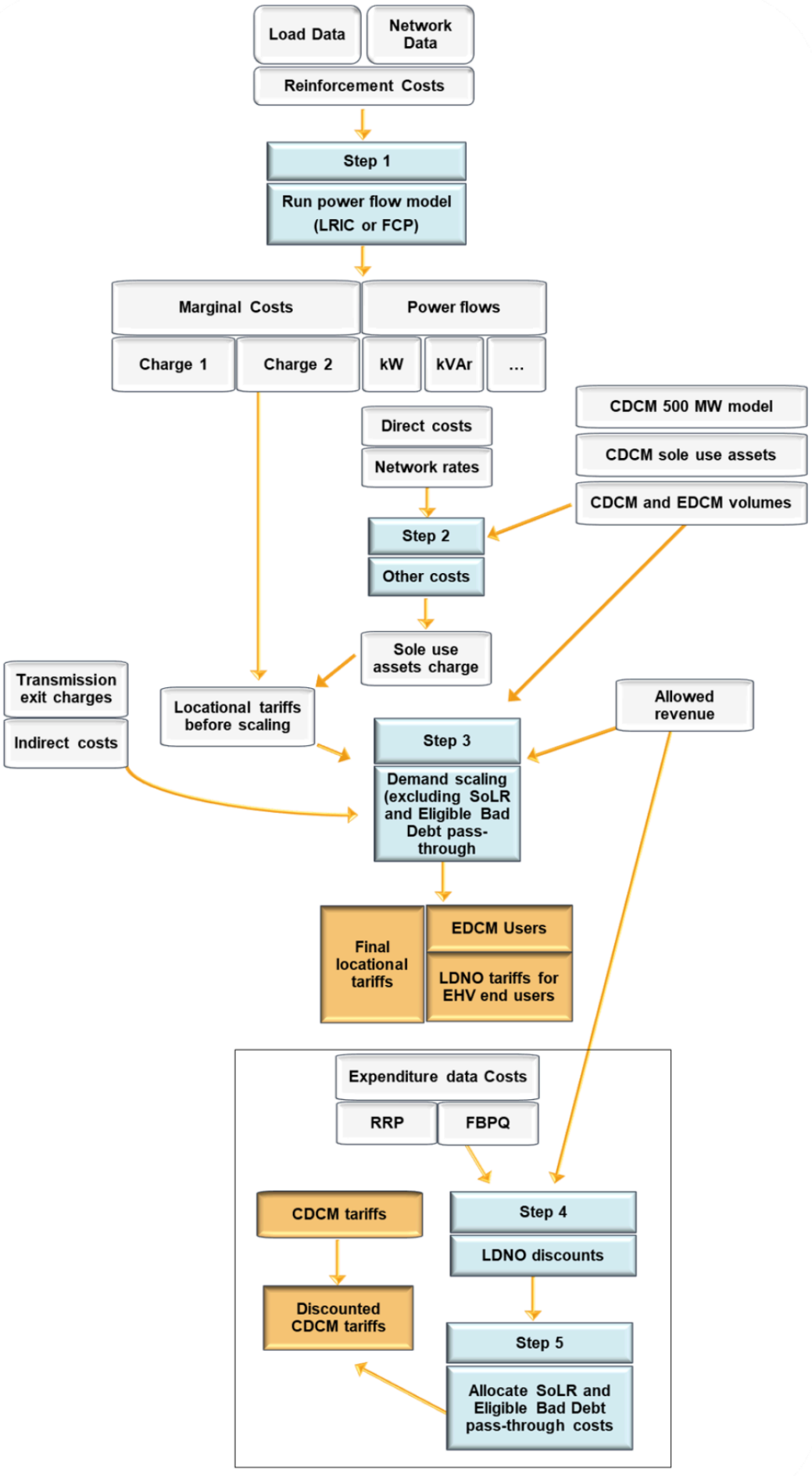
Load Data
Network Data
Reinforcement Costs
Step 1
Run power flow model (LRIC or FCP)
Marginal Costs
Power flows
Charge 1
Charge 2
kW
kVAr
...
CDCM 500 MW model
Direct costs
CDCM sole use assets
Network rates
CDCM and EDCM volumes
Step 2
Other costs
Sole use assets charge
Transmission exit charges
Indirect costs
Locational tariffs before scaling
Allowed revenue
Step 3
Demand scaling (excluding SoLR and Eligible Bad Debt pass-through
Final locational tariffs
EDCM Users
LDNO tariffs for EHV end users
Expenditure data Costs
RRP
FBPQ
CDCM tariffs
Step 4
LDNO discounts
Discounted CDCM tariffs
Step 5
Allocate SoLR and Eligible Bad Debt pass-through costs

2. LONG RUN INCREMENTAL COST PRICING ANALYSIS

Introduction

2.1 This Schedule 18 sets out the principles and high-level detail that should be adopted as the common approach to EDCM Use of System Charging that is based on the Long Run Incremental Cost (LRIC) model.

2.2 The LRIC model calculates Nodal incremental costs. These costs represent the brought forward (or deferred) reinforcement costs caused by the addition of an increment of demand or generation at each network Node. The method models the impact changes in Connectees' behaviour have on network costs.

2.3 In particular, the LRIC model takes account of the effects a change in Connectee behaviour has on the network by using AC power flow analysis, which enables the calculation of the time needed before elements of the network require reinforcement and subsequently the net present value (NPV) of the future costs of reinforcement. The incremental cost is equal to the difference in the NPV of reinforcing under existing conditions and when an increment of new demand or generation is added.

2.4 To calculate Use of System Charges for EDCM Connectees (demand and generation), the common LRIC method consists of the following stages:

a. LRIC model:

i. AC power flow analysis;
ii. calculation of Branch incremental costs (in £/annum); and
iii. calculation of Nodal incremental costs (including the consideration of the Maximum Demand Scenario and the Minimum Demand Scenario; in £/annum);
iv. calculation of Nodal, Charge 1 (by taking account of the magnitude of the increment driving the incremental costs; in £/kVA/annum).

b. derivation of site-specific Use of System Charges (including the consideration of sole use asset charges, transmission exit charges and operating and maintenance costs); and
c. scaling to derive the final EHV Use of System Charges.

Power Flow Analysis

2.5 Power flow analysis calculates the effects of adding an increment of demand or generation to the DNO Party's Distribution System. In particular, it calculates the power flows passing over the various assets comprising the DNO Party's network under base and incremented conditions using maximum (typically during the winter period) and minimum (typically during the summer period) demand data.

2.6 The power flow analysis calculates the following values for each Node/Branch combination:

a. base power flows using Maximum Demand Data and Minimum Demand Data, and
b. incremented power flows using Maximum Demand Data and Minimum Demand Data.

2.7 Power flow analysis uses a number of processes and assumptions as follows:

a. A representation of the entire EHV network captured using appropriate power flow modelling software (the Authorised Network Model)[1]. The modelled network should be based on the network expected to exist and be in operation in the Regulatory Year that Use of System Charges are being calculated for, based on the DNO Party's Long Term Development Statement (save that, until 5 November 2016, where charges

are being calculated for two or more Regulatory Years, the same Authorised Network Model will be used for all the years).

b. AC power flows should be calculated for maximum and minimum demand base conditions and for maximum and minimum demand conditions plus an increment of demand or generation[2]. A 0.1MW Nodal increment should be used in relation to calculating the active demand and generation elements of the incremented power flows, assuming that the power factor is 0.95 for increments applied at Nodes where demand is located and unity for increments applied at Nodes where generation is located. Increments will be applied in the direction of demand for the analysis of maximum demand network conditions and in the direction of generation for the analysis of minimum demand conditions. Where both demand (load) and generation are located at a Node, separate incremental power flows shall be calculated using increments at 0.95 power factor and at unity power factor.

c. Nodal demand and generation data should be used, which is based on actual metered network usage data that is recovered from the DNO Party's Supervisory Control and Data Acquisition (SCADA) (or equivalent) system. In particular:

   i. **Demand Data -** for the maximum demand period, the model uses demands consistent with those used to assess reinforcement[3]. This includes diversity to allow a complete EHV network model to be run[4]. Minimum demands are taken as being a percentage of maximum demands[5]. This percentage is derived for each Grid Supply Point (GSP) and applied to the demands supplied by that GSP;

   ii. **Generation Data** - for the maximum demand period generation is zero unless it is deemed to contribute to network security in accordance with ER P2/6[6]. The generation export used for the minimum demand period is the Maximum Export Capacity for each EDCM (Generation) Connectee, factored to reflect coincidence with other generation export. This factor is derived for each GSP and applied to EDCM (Generation) Connectees connected to that GSP. These are broadly similar to the assumptions that are used by the DNO Party when investment planning[7];

   iii. **Cleansing Data -** the DNO Party should cleanse demand and generation data so that it is representative of typical network usage. That is, anomalous power flows, which represent, for example, demand levels at a time when the network is experiencing an outage, should be removed from the data set and the effects of load management schemes should be taken account of[8];

   iv. **Growth Rate -** a single underlying network growth rate is used to assess the timing of future reinforcement for both demand and generation Connectees. It represents the long run growth of all DNO Parties' networks and is set to 1% growth per annum. To facilitate predictability and stability, the growth rate is used throughout the model, and (as with all assumptions) the DNO Party should keep this growth rate under review. As a minimum, the rate should be reviewed and reset when the charge restriction conditions in the DNO Party's Distribution Licence are reviewed every five years; and

   v. **Security Factors -** a pair of Security Factors should be determined[9] for each Branch using a full N-1 Contingency Analysis assuming maximum and minimum demand conditions[10]. These factors are used to determine the usable capacity of network Branches during maximum and minimum demand conditions. They are recalculated each time the network is changed or new load estimates used. Each N-1 Contingency will consider the consequential network actions and where appropriate constraints on Connectee demands (both generation and load) to meet the security of supply requirements of E/R P2/6.

d. The results of the power flow analysis are sense checked to identify where application of Security Factors to the incremented power flows leads to excessively large (and non-credible) estimations of the change in Branch utilisation. The following conditions are identified:

   i. low base power flows;

ii. high Security Factors; and
iii. where the difference between the base and incremented Branch power flows exceeds the change that could reasonably be expected to occur as a result of the application of an increment of demand or generation.
iv. Where such cases are encountered a modified approach to the anticipated change in power flow in the Branch is used. Guidance on the sense checking of the power flow analysis results is provided in section 8.3 of Annex 1 - Implementation Guide. This approach does not apply the Security Factor when considering the change in flow between the incremented and the base case power flow.

Calculation of Branch incremental costs

2.8 The incremental cost of reinforcing a Branch due to an increment at a Node is the difference in the net present value (NPV) of reinforcing the Branch under base and incremented conditions. An explanation of the derivation of the formulae used to calculate Branch incremental costs is provided in Annex 1 - Implementation Guide.

2.9 The Branch incremental cost, denoted ΔCi, is calculated using the following formulae:

$$\Delta C_i = [NPV(inc) - NPV(base)]i \cdot AnnuityRate$$

$$NPV(inc) = \frac{CostOfReinforcementSolution}{[1 + DiscountRate]^{YearsToReinforcement(inc)}}$$

$$NPV(base) = \frac{CostOfReinforcementSolution}{[1 + DiscountRate]^{YearsToReinforcement(base)}}$$

$$YearsToReinforcement\,(base) = \frac{log(BranchCapacity) - log(BasePowerFlow(MVA))}{log(1 + GrowthRate)}$$

$$YearsToReinforcement\,(inc) = \frac{log(BranchCapacity) - log(IncPowerFlow(MVA))}{log(1 + GrowthRate)}$$

$$AnnuityRate = \frac{DiscountRate}{1 - \left[\frac{1}{(1+DiscountRate)^{AnnuityPeriod}}\right]}$$

BranchCapacity is the MVA rating of the “critical” asset in the considered Branch divided by the corresponding Security Factor; a pair of Branch capacities is calculated for maximum demand and minimum demand conditions. Guidance on Branch ratings is provided in section 7.5 of Annex 1. Guidance on sense

checking Security Factors prior to the calculation of Branch incremental costs is provided in section 8.3 of Annex 1.

CostOfReinforcementSolution is the modern equivalent asset value (MEAV) of reinforcing the particular Branch, bearing in mind the requirements of similar historic projects. This cost is the same under both base and incremented conditions. The DNO Party should use the specifications and costs of similar, past reinforcement projects as a means for determining the requirements and costs of a particular future reinforcement project. Guidance on the reinforcement cost calculation principles is provided in section 7.4 of Annex 1.

YearsToReinforcement is the number of years into the future when reinforcement of the Branch will be required. This is calculated separately under base and incremented conditions.

DiscountRate is set to equal the latest pre-tax real weighted average cost of capital (CC below) for each DNO Party calculated using the following formula:

CC = (Gearing Assumption x Pre-Tax Cost of Debt) + (1- Gearing Assumption) * (Post Tax Cost of Equity / (1-Corporation Tax Rate))

where:

Gearing Assumption is set to the 'Notional gearing' value for the regulatory year for which tariffs are being set in the latest version of the PCFM (InputSummary sheet, Finance inputs, Vanilla allowed return on capital) prepared for the relevant DNO Party for publication with such tariff setting on the DNO Party's website;

Pre-Tax Cost of Debt is set to the 'Allowed return on debt' value for the regulatory year for which tariffs are being set in the latest version of the PCFM (InputSummary sheet, Finance inputs, CAPM calculator tool: allowed return on debt) prepared for the relevant DNO Party for publication with such tariff setting on the DNO Party's website;

Post Tax Cost of Equity is set to the 'Allowed return on equity' value for the regulatory year for which tariffs are being set in the latest version of the PCFM (InputSummary sheet, Finance inputs, CAPM calculator tool: allowed return on equity) prepared for the relevant DNO Party for publication with such tariff setting on the DNO Party's website; and

Corporation Tax Rate is set to the 'Corporation tax rate' value for the regulatory year for which tariffs are being set in the latest version of the PCFM (InputSummary sheet, Tax, Tax policy) prepared for the relevant DNO Party for publication with such tariff setting on the DNO Party's website.

In the event of any value not being available from the above data sources, the DNO Party will prepare a forecast of the value to be used in the CC formula instead.

The CC value is calculated as a percentage, and rounded to two decimal places.

GrowthRate is the growth rate in per units of the power flow, currently set at 1%.

AnnuityPeriod is the period over which costs are annuitised. This period is set to 40 years and represents the typical life of an asset.

2.10 Separate assessment of the total Branch cost recovery associated with incremental costs that represent charges, *PositiveCostRecovery*, and the total Branch recovery associated with incremental costs that

represent credits, *NegativeCostRecovery*, is done to eliminate over-recovery of both the charges and credits.

2.11 Two total Branch cost recoveries, namely *PositiveCostRecovery* and *NegativeCostRecovery*, are derived from the power-flow modelling and sense checked for each Branch individually. Guidance on sense checking of overall positive and negative Branch cost recoveries is provided in section 8.3 of Annex 1.

2.12 The positive Branch cost recovery for a particular Branch is calculated by adding together the cost recovery for the Branch at each Node where the incremental cost is positive (i.e. 'charge', determined by the product of the positive Branch incremental costs and the appropriate Nodal demands, or generation output, used in the modelled network).

2.13 Similarly, the negative Branch cost recovery is calculated for the Branch where each Node incremental cost is negative (i.e.'credits', determined by the product of the negative Branch incremental costs and the appropriate Nodal demands, or generation output, used in the modelled network).

2.14 Both sense checks only consider Branch incremental costs associated with the period that drives reinforcement. Where either the positive or the negative (by absolute value) cost recovery for a particular Branch is greater than the actual reinforcement cost of the Branch (*ActualReinforcementCost*, as determined by the product of the Annuity Rate and the *CostofReinforcementSolution*), then it is considered that the Branch recovery of charges or credits is excessive.

2.15 In order to limit the level of positive Branch cost recovery (charges) to being no greater than the actual reinforcement cost of the Branch, a Positive Cost Recovery Factor, S_{Pi}, is applied to the positive Branch incremental costs associated with Branch i, when used in the calculation of Nodal incremental costs. Similarly, a Negative Cost Recovery Factor, S_{Ni}, is applied to the negative Branch incremental costs associated with Branch i in order to limit the level of negative Branch cost recovery (credits).

2.16 Where the positive cost recovery associated with Branch i (ie charges) is determined by the sense checking, to be excessive then:-

$$S_{Pi} = \frac{ActualReinforcementCost_i}{PositiveCostRecovery_i}$$

otherwise:-

$$S_{Pi} = 1$$

Where the negative cost recovery associated with Branch i (i.e. credits) is determined to be excessive, then:-

$$S_{Ni} = \frac{ActualReinforcementCost_i}{NegativeCostRecovery_i}$$

$S_{Ni} = 1$.

2.17 The EHV network includes single Connectees using sole-use assets that have been sized to their connection requirements. Costs for these assets should be excluded from the calculation of incremental

costs. Replacement and operation and maintenance costs for these assets should also be excluded from the calculation of incremental costs, but may be incorporated into a Connectee's final Use of System Charge.

Calculation of Nodal incremental costs

2.18 Guidance on the calculation of Nodal incremental costs, is provided in section 8 (Output results) of Annex 1. The formulae used to calculate Nodal incremental costs are described in Annex 2.

2.19 A pair of incremental costs (one for the Maximum Demand Scenario and another for the Minimum Demand Scenario) is calculated for each Node by summating Branch incremental costs that result from applying an increment at that Node. A peak Nodal incremental cost is calculated by summating Branch peak incremental costs, where maximum demand conditions drive Branch reinforcement. An off-peak Nodal incremental cost is calculated by summating Branch off-peak incremental costs, where minimum demand conditions drive Branch reinforcement. Only Branches that experience a change greater than both 1kVA and 0.01 % of Base Power Flow in the power that flows across them are used in the calculation of Nodal charges. The period that is deemed to drive reinforcement is the period with the highest absolute incremental cost.

2.20 The formulaic expression for Nodal incremental cost is given by:

$$IncrementalCostAtNode^{Peak} = \sum_{i \in \alpha} s_i \cdot \Delta C_i^{Peak}, \alpha = \left\{1, 2, \dots B \middle| \left|\Delta C_i^{Peak}\right| > \left|\Delta C_i^{Off-Peak}\right|\right\}$$

$$IncrementalCostAtNode^{Off-Peak} = \sum_{i \in \beta} s_i \cdot \Delta C_i^{Off-Peak}, \beta = \left\{1, 2, \dots B \middle| \left|\Delta C_i^{Peak}\right| < \left|\Delta C_i^{Off-Peak}\right|\right\}$$

where:

$$\Delta C_i^{Peak} = [NPV(inc) - NPV(base)]_i^{Peak} \cdot AnnuityRate$$

$$\Delta C_i^{Off-Peak} = [NPV(inc) - NPV(base)]_i^{Off-Peak} \cdot AnnuityRate$$

ΔC $_i^{Peak}$ **and** ***ΔC*** $_i^{OffPeak}$ denote the incremental cost of reinforcing Branch *i*, under maximum and minimum demand conditions respectively, due to an increment of demand or generation at the Node;

Si denotes the Recovery Factor for Branch i;

B is the total number of Branches in the network;

α **and** ***β*** are subsets of Branches where relevant conditions are satisfied.

Calculation of Nodal marginal charges for demand

2.21 Guidance on the calculation of Nodal marginal charges for demand sites is provided in section 8.12 (Demand Nodes) of Annex 1 - Implementation Guide.

2.22 The Nodal incremental costs for demand sites are derived using Branch incremental costs produced by application of 0.1MW increments at 0.95 power factor, which is equivalent to 0.10526MVA. The Nodal marginal charges for demand in (£/kVA/annum) are obtained by dividing the Nodal incremental cost for each period by the absolute value of the kVA increment:

$$ChargeAtNode^{Peak} = IncrementalCostAtNode^{Peak}/105.26 \quad (£/kVA/annum)$$

2.23 A positive value of *ChargeAtNode*^{Peak} represents a charge for demand sites at the Node, whereas a negative value represents a credit. This statement defines the sign convention of the Nodal marginal charges (as outlined in section 8 (Output results) of Annex 1 - Implementation Guide and Attachment 3 - Output Results. However, it should be noted that this does not describe the application of these charges in the calculation of final Use of System Charges (or credits in respect of final Use of System Charges).

Generation sites

2.24 Guidance on the calculation of Nodal marginal charges for generation sites is provided in section 8.13 (Generation Nodes) of Annex 1 - Implementation Guide.

2.25 The Nodal incremental costs for generation sites are derived using Branch incremental costs produced by application of 0.1MW increments at unity power factor being equal to 0.1MVA. The Nodal marginal charges for generation are obtained by dividing the Nodal incremental cost for each period by the absolute value of the kVA increment:

$$ChargeAtNode^{Peak} = IncrementalCostAtNode^{Peak}/100 \quad (£/kVA/annum)$$

2.26 A positive value of *ChargeAtNode*^{Peak} represents a credit for generation sites at the Node, whereas a negative value represents a charge. This statement defines the sign convention of the Nodal marginal charges (as outlined in section 8 (Output results) of Annex 1 - Implementation Guide and Attachment 3 - Output Results. However, it should be noted that this does not describe the application of these charges in the calculation of final Use of System Charges (or credits in respect of final Use of System Charges).

Decomposition of Nodal marginal charges

2.27 Each Nodal marginal charge, derived from the Nodal incremental costs, is decomposed into two sub-elements, termed 'local' and 'remote', such that:-

$$ChargeAtNode^{Peak} = LocalChargeAtNode^{Peak} + RemoteChargeAtNode^{Peak}$$

2.28 The local element of each charge at a Node is derived from:-

a. the Branch incremental costs associated with Branches that are operating at the same nominal voltage as the voltage of the Node where the increment was applied; and
b. the Branch incremental costs associated with Branches that represent transformation from a higher voltage down to the same nominal voltage as the voltage of the Node where the increment was applied.

2.29 The remote element of each Nodal incremental cost is derived from the Branch incremental costs from all Branches other than those where the Branches are operating at the same nominal voltage as the voltage of the Node where the increment was applied, or where the Branches represent transformation from a higher voltage down to the same nominal voltage as the Node. In other words, all Branches that are not 'local' are 'remote'.

Outputs from LRIC Analysis

2.30 The LRIC methodology produces the following outputs:

a. Location (Node);
b. Demand Type (Generation or Load);
c. Local Charge 1: $LocalChargeAtNode^{peak}$ (£/kVA/annum);
d. Remote Charge 1: $RemoteChargeAtNode^{peak}$ (£/kVA/annum);
e. Active Power (kW) for the Maximum Demand Scenario;
f. Reactive Power (kVAr) for the Maximum Demand Scenario;

3. EDCM CHARGE COMPONENTS FOR CONNECTEES

3.1 This section sets out the different charge components that will apply to Connectees under the EDCM. Charge components are the outputs of the EDCM and make up the distribution use of system charges applied to Connectees.

3.2 In the EDCM, each set of charges comprises import rates, export rates, or both, as applicable to the Connectee. The DNO Party's Relevant Charging Statement includes information that enables a Supplier to determine which Designated EHV Property each set of charges applies to.

3.3 Demand charges under the EDCM comprise the following individual components:

- Import fixed charges.
- Import capacity charges.
- Exceeded import capacity charges.
- Unit rate charges for consumption at the time of the DNO Party's peak (super-red time band).

3.4 The EDCM charge components for import are listed in Table 3.4.

Table 3.4 Charge components for import

Tariff component	Unit
Import fixed charge	p/day
Import capacity charge	p/kVA/day
Exceeded import capacity charge	p/kVA/day
Super-red import unit charge	p/kWh

3.5 Generation charges under the EDCM comprise the following individual components:

- Export fixed charges
- Export capacity charges
- Exceeded export capacity charges
- Export super-red unit rate (credit)

3.6 The EDCM charge components for export are listed in Table 3.6.

Table 3.6 Charge components for export

Tariff component	Unit
Export fixed charge	p/day
Export capacity charge	p/kVA/day
Exceeded export capacity charge	p/kVA/day
Export Super-red unit charge	p/kWh

3.7 The next section details the calculation of the elements that determine the charge components described above.

4. CALCULATION OF EDCM CHARGE COMPONENTS

4.1 EDCM charge components are derived from charge elements. This section describes the method for calculating each of these charge elements.

5. CHARGEABLE EXPORT CAPACITY FOR EXPORT CHARGES

5.1 The Chargeable Export Capacity for each Connectee is defined as the Maximum Export Capacity minus any capacity that is exempt from use of system charges in the charging year.

6. APPLICATION OF LRIC CHARGE 1

6.1 Each tariff in the model is linked to one LRIC location or point. Each LRIC point may have a local and remote charge 1 in £/kVA/year associated with it.

6.2 Some LRIC points might be designated as linked. Each set of linked points comprises a maximum of eight points. Where a tariff is associated with a point which is part of a set of linked points, the LRIC charge 1 used for that tariff are determined by calculating the applicable local and remote charge 1 as a weighted average of the local and network charge 1 respectively at each linked point (ignoring negative values) using the kVA modelled flow in the maximum demand run as weights. If all the weights are zero in any of these calculations then an unweighted average is used instead of the weighted average.

6.3 The import charges for the application of charge 1, is given by the formulas:

[p/kWh super-red rate] = (([remote charge 1 £/kVA/year] / PF) / [number of hours in the super-red time band in a year]) * 100

[p/kVA/day capacity charge] = ([local charge 1 £/kVA/year] /[days in Charging Year])*100

Where:

PF is the power factor of the flow at the point at which the customer is attached in the maximum demand scenario. This is calculated as - [Active power flow] / (SQRT([Active power flow]^2 + [Reactive power flow]^2). If either the numerator or denominator in calculation of the power factor is zero, the PF is replaced with 1. If the active power flow is generation-dominated, then PF is replaced with 1.

6.4 If the Connectee is attached to a cluster of linked locations, the sums of active power flows and reactive power flows at each location are used to calculate PF.

6.5 Charge 1 is applied to export charges as a credit. The credit is expressed as a negative charge rate in p/kWh and is applied in respect of active power units exported during the DNO Party's super-red time band. The credit rate is set to zero for Connectees who are assigned an F Factor of zero. The credit rate is calculated as follows:

[p/kWh super-red export rate] = -100*[Proportion eligible for charge 1 credits]*([local charge 1 £/kVA/year] + [remote charge 1 £/kVA/year]) * ([Chargeable export capacity]/[Maximum export capacity]) /[number of hours in the super-red time band]

Where:

The proportion eligible for charge 1 credits is zero if the F factor that is assigned to the Connectee as described in the LRIC methodology is equal to zero, and 1 otherwise.

The super-red export rate is not applied to Connectees with zero Chargeable Export Capacity.

7. NO APPLICATION OF NEGATIVE CHARGES

7.1 Under LRIC, charge 1 can be negative at some locations. Any negative values of Charge 1 (both local and remote) are set to zero.

8. DEMAND SIDE MANAGEMENT (DSM) AND GENERATION SIDE MANAGEMENT (GSM)

8.1 Some EDCM Customers are subject to demand side management (DSM) or generation side management (GSM) agreements.

8.2 For Connectees with DSM agreements, let “chargeable capacity” be equal to the Maximum Import Capacity minus the capacity that is subject to restrictions under a DSM agreement. These restrictions would take into account any seasonal variations built into these agreements.

8.3 For Connectees with DSM agreements, DSM-adjusted local and remote (or parent and grandparent) elements of the LRIC charge are calculated as the product of the ratio of “chargeable capacity” to Maximum Import Capacity and the unadjusted elements of the LRIC charge. Where the Maximum Import Capacity is zero, this ratio is set to 1. The DSM-adjusted local element of the LRIC charge 1 is applied to the Maximum Import Capacity, and the DSM-adjusted remote (or parent and grandparent) element of the LRIC charge 1 is applied to units consumed during the super-red time band.

8.4 For Connectees with GSM agreements, no adjustments are made in the EDCM.

9. TRANSMISSION CONNECTION (EXIT) CHARGES FOR DEMAND

9.1 A separate transmission exit charge is applied to demand tariffs.

9.2 A single charging rate, in p/kW/day is calculated as follows:

Transmission exit charging rate p/kW/day = 100 / DC * ISOP charge / (CDCM system maximum load + total EDCM peak time consumption)

Where:

DC is the number of days in the Charging Year.

ISOP charge is the DNO Party's forecast annual expenditure on transmission connection point charges in £.

CDCM system maximum load is the forecast system simultaneous maximum load from CDCM Connectees (in kW) from CDCM table 2506.

Total EDCM peak time consumption (in kW) calculated by multiplying the Maximum Import Capacity of each Connectee by the forecast peak-time kW divided by forecast maximum kVA of that Connectee (adjusted for losses to transmission and, if necessary, for Connectees connected for part of the Charging Year) and aggregating across all EDCM Customer demand.

The single p/kW/day charging rate is converted into a p/kVA/day import capacity based charge for each EDCM Connectees as follows:

Transmission exit charge p/kVA/day = [Transmission exit charging rate in p/kW/day] * [Forecast peak-time kW divided by kVA of that Connectee, adjusted for transmission losses and, if necessary for Connectees connected part of the year]

10. TRANSMISSION CONNECTION (EXIT) CREDITS FOR GENERATORS

10.1 A capacity-based credit related to transmission exit is applied to generation tariffs.

10.2 Transmission exit credits are paid to generators that have an agreement with the DNO, the terms of which require the generator, for the purposes of P2/6 compliance, to export power during supergrid transformer (SGT) outage conditions.

10.3 The rate in p/kVA/day for each generation customer would be calculated as follows:

Transmission exit credit p/kVA/day = -[Transmission exit charging rate in p/kW/day] × [Capacity eligible for credits in kW] / [Chargeable Export Capacity in kVA of that Connectee]

Where:

Transmission exit charging rate in p/kW/day is calculated as described for demand tariffs.

Capacity eligible for credits (in kW) is the capacity that is made available by the generator under the agreement with the DNO.

Chargeable Export Capacity (in kVA) is the forecast average value of the maximum export capacity of the generator over the charging year, less any capacity that is exempt from use of system charges in the charging year.

10.4 The generation transmission connection (exit) rate is not calculated for Connectees with zero Chargeable Export Capacity.

10.5 Transmission connection (exit) credits are applied to the Chargeable Export Capacity (in kVA)

11. REACTIVE POWER CHARGES

11.1 The EDCM does not include a separate charge component for any reactive power flows.

12. EXPORT CAPACITY CHARGES

12.1 The EDCM includes an export capacity charge.

12.2 First, an EDCM generation revenue target would be calculated as follows:

EDCM DG revenue target £/year = GL × [Total 2005-2010 EDCM generation capacity] / ([Total 2005-2010 EDCM generation capacity] + [Total 2005-2010 CDCM generation capacity]) + AGPa × [Total post-2010 EDCM generation capacity] / ([Total post-2010 EDCM generation capacity] + [Total post-2010 CDCM generation capacity]) + (OM × ([Total Pre-2005 EDCM DG capacity] + [Total Post-2010 EDCM DG capacity]))

Where:

GL is the incentive revenue in the charging year in respect of generation connected between 2005 and 2010 calculated for the charging year as in paragraph 11.10 of the Special Conditions of the Electricity Distribution Licence (CRC11). From and including Regulatory Year 2015/2016 GL is zero.

AGPa is the average of the values of GPa for the charging year and each of the two years immediately preceding the charging year. For Regulatory Year 2014/2015 GPa is calculated using a modified version of the formula in paragraph 11.6 of the Electricity Distribution Licence (CRC11) resulting from DPCR5. To calculate GPa, the term GPX is replaced by the term GPS in the formula in paragraph 11.6. Both GPX and GPS are defined in paragraph 11.7 of the same document. For Regulatory Years 2015/16 onwards GPa is zero.

Total Pre-2005 EDCM DG capacity is the aggregate maximum export capacity of all non-exempt EDCM generators that connected before 1 April 2005, adjusted for part-year connected generators. In the case of generators that have subsequently increased their maximum export capacity, the part of their capacity that was added after 1 April 2005 would be ignored.

Total 2005-2010 EDCM generation capacity is the sum of the maximum export capacities of all non-exempt EDCM generators that connected between 1 April 2005 and 31 March 2010, adjusted for part-year connected generators.

Total Post-2010 EDCM generation capacity is the sum of the maximum export capacities of all non-exempt EDCM generators that connected on or after 1 April 2010, adjusted for part-year connected generators. In the case of generators that originally connected before 1 April 2010 and have increased their maximum export capacity on or after 1 April 2010, the capacity that was added after 1 April 2010 should be included.

Total 2005-2010 CDCM generation capacity is the sum of the maximum export capacities of all non-exempt CDCM generators that connected between 1 April 2005 and 31 March 2010, adjusted for part-year connected generators.

Total Post-2010 CDCM generation capacity is the sum of the maximum export capacities of all non-exempt CDCM generators that connected on or after 1 April 2010, adjusted for part-year connected generators.

OM is an allowance in £/kW in respect of the operational and maintenance costs for assets that are deemed to have been installed for the purposes of connecting generators to the distribution network. The value of OM is set to £0.20/kW.

12.3 A fixed export capacity charge in p/kVA/day is calculated as follows:

Fixed export capacity charge in p/kVA/day = (100 / DC) * [EDCM DG revenue target] / [Total EDCM generation capacity]

Where:

EDCM DG revenue target in £/year is calculated as described above

Total EDCM generation capacity (in kVA) is the aggregate Chargeable Export Capacity of all Connectees, adjusted, if necessary for Connectees connected part of the year.

12.4 The fixed export capacity charge in p/kVA/day is applied to the Chargeable Export Capacity of each EDCM Connectee.

13. ALLOCATION DRIVERS FOR OTHER CHARGE ELEMENTS IN THE EDCM

13.1 In addition to charges calculated using the FCP and LRIC methodologies and transmission connection (exit) charges, the EDCM includes charge elements relating to:

- the DNO Party's direct operating costs (this includes inspection and maintenance costs, operating expenditure relating to fault repairs and the cost of tree cutting);
- the DNO Party's indirect costs. (these are costs that are not directly related to network assets, such as business support costs);
- the DNO Party's network rates (these are business rates paid by DNO Parties); and
- the DNO Party's residual revenue.

13.2 The residual revenue is that part of the DNO Party's Allowed Revenue less any revenue relating to recovery of the DNO Party_pass-through costs that has not been pre-allocated to demand charges using cost-based charge elements.

13.3 EDCM charge elements are determined using allocation drivers. The following allocation drivers are used in the EDCM:

- The value of assets that are for the sole use of a Connectee (sole use assets). This is relevant to import and export charges.
- The value of site-specific shared network assets used by the Connectee. This is relevant to import charges only. The sum of historical consumption at the time of system peak and 50 per cent of Maximum Import Capacity. This is relevant to import charges only.
- Chargeable Export Capacity. This is relevant to export charges only.

13.4 The methods used to determine the value of sole use assets and shared site-specific shared network assets are described below.

14. SOLE USE ASSETS

14.1 The value of a customer's sole use assets used is expressed in the form of a modern equivalent asset value (MEAV) in £.

14.2 Sole use assets are assets in which only the consumption or output associated with a single Connectee can directly alter the power flow in the asset, taking into consideration all possible credible running

arrangements, i.e. all assets between the Connecteegeneral network are considered as sole use assets.

14.3 The Point of Common Coupling for a particular single Connectee is the point on the network where the power flow associated with the single Connectee under consideration, may under some (or all) possible arrangements interact with the power flows associated with other Connectees, taking into account all possible credible running arrangements.

14.4 Where a single site has both import and export charges, associated with import and export meter registrations, the sole use assets are allocated between the import and export proportionally to Maximum Import Capacity and Maximum Export Capacity respectively. Where any part of the Maximum Export Capacity associated with an export meter registration is exempt from use of system charges in the charging year, the value of sole use assets allocated to the export tariff is reduced by multiplying it by the ratio of the Chargeable Export Capacity to the Maximum Export Capacity.

14.5 Where an EDCM site was originally connected as a single Connected Installation, and has subsequently split into multiple Connected Installations, these sites continue to be considered as one site for the purposes of determining sole use assets. The sole use asset MEAV is allocated between these Connected Installations in proportion to their Maximum Import Capacities and Maximum Export Capacities.

15. SITE-SPECIFIC SHARED NETWORK ASSETS

15.1 A Connectee's notional site-specific shared network asset value is the value of network assets that are deemed to be used by that Connectee, other than sole use assets as defined earlier.

15.2 The value of notional site-specific shared assets used by each Connectee is expressed in the form of a modern equivalent asset value (MEAV) in £.

15.3 The value of shared network assets used by each demand Connectee is calculated as set out below.

15.4 Five levels are defined for the network's assets:

- Level 1 comprises 132 kV circuits.
- Level 2 comprises substations with a primary voltage of 132 kV and a secondary voltage of 22 kV or more.
- Level 3 comprises circuits of 22 kV or more but less than 132 kV.
- Level 4 comprises substations with a primary voltage of 22 kV or more but less than 132 kV and a secondary voltage of less than 22 kV.
- Level 5 comprises substations with a primary voltage of 132 kV and a secondary voltage of less than 22 kV.

15.5 In some cases, it might be appropriate to treat 66 kV equipment as being equivalent to 132 kV equipment and allocate Connectees to categories accordingly.

15.6 EDCM Customers are split into 15 categories based on the parts of the EHV network they are deemed to use. This is based on the Point of Common Coupling. The Point of Common Coupling might be at a different voltage than the Connectee's connection, and might also be at a different voltage than the voltage of connection when the Connectee was connected.

Table 15.6 Categorisation of EDCM Customers

Category	Definition
Category 0000	Point of Common Coupling at the GSP, whether the GSP is shared or not.
Category 1000	In England or Wales only, Point of Common Coupling at a voltage of 132 kV, unless the Connectee qualifies for category 0000.
Category 1100	Point of Common Coupling at 22 kV or more on the secondary side of a substation where the primary side is attached to a 132 kV circuit.
Category 0100	Point of Common Coupling at 22 kV or more, but less than 132 kV, on the secondary side of a substation where the primary side is attached at 132 kV to a co-located GSP with no use of any 132 kV circuits.
Category 1110	Point of Common Coupling at a voltage of 22 kV or more, but less than 132 kV, not at a substation, fed from a substation whose primary side is attached to a 132 kV distribution circuit.
Category 0110	Point of Common Coupling at a voltage of 22 kV or more, but less than 132 kV, not at a substation, fed from a substation whose primary side is attached at 132 kV to a co-located GSP with no use of any 132 kV circuits.
Category 0010	Point of Common Coupling at a voltage of 22 kV or more, but less than 132 kV, fed from a GSP with no intermediate transformation.
Category 0001	Point of Common Coupling at a voltage of less than 22 kV on the secondary side of a substation where the primary side is attached at 132 kV to a co-located GSP with no circuit.
Category 0002	Point of Common Coupling at a voltage of less than 22 kV on the secondary side of a substation where the primary side is attached at 22 kV or more but less than 132 kV, to a co-located GSP with no circuit.
Category 1001	Point of Common Coupling at a voltage of less than 22 kV on the secondary side of a substation whose primary side is attached to a 132 kV distribution circuit.
Category 0011	Point of Common Coupling at a voltage of less than 22 kV on the secondary side of a substation whose primary side is at a voltage of 22 kV or more, but less than 132 kV, fed from a GSP with no intermediate transformation.
Category 0111	Point of Common Coupling at a voltage of less than 22 kV on the secondary side of a substation whose primary side is at a voltage of 22 kV or more, but less than 132 kV, fed through a distribution circuit from a substation whose primary side is attached at 132 kV to a co-located GSP with no circuit.
Category 0101	Point of Common Coupling at a voltage of less than 22 kV on the secondary side of a substation whose primary side is at a voltage of 22 kV or more, but less than 132 kV, fed from the secondary side of a co-located substation whose primary side is attached at 132 kV to a co-located GSP with no circuit.
Category 1101	Point of Common Coupling at a voltage of less than 22 kV on the secondary side of a substation whose primary side is at a voltage of 22 kV or more, but less than 132 kV, fed from the secondary side of a co-located substation whose primary side is attached to a 132 kV distribution circuit.
Category 1111	Point of Common Coupling at a voltage of less than 22 kV on the secondary side of a substation whose primary side is at a voltage of 22 kV or more, but less than 132 kV, fed through a distribution circuit from a substation whose primary side is attached to a 132 kV distribution circuit.

15.7 All references to GSP in Table 15.6 above relate to interconnections with the onshore National Electricity Transmission System.

15.8 The figure below provides examples of Connectees who might be placed in each of the categories described above.

Customer Categories

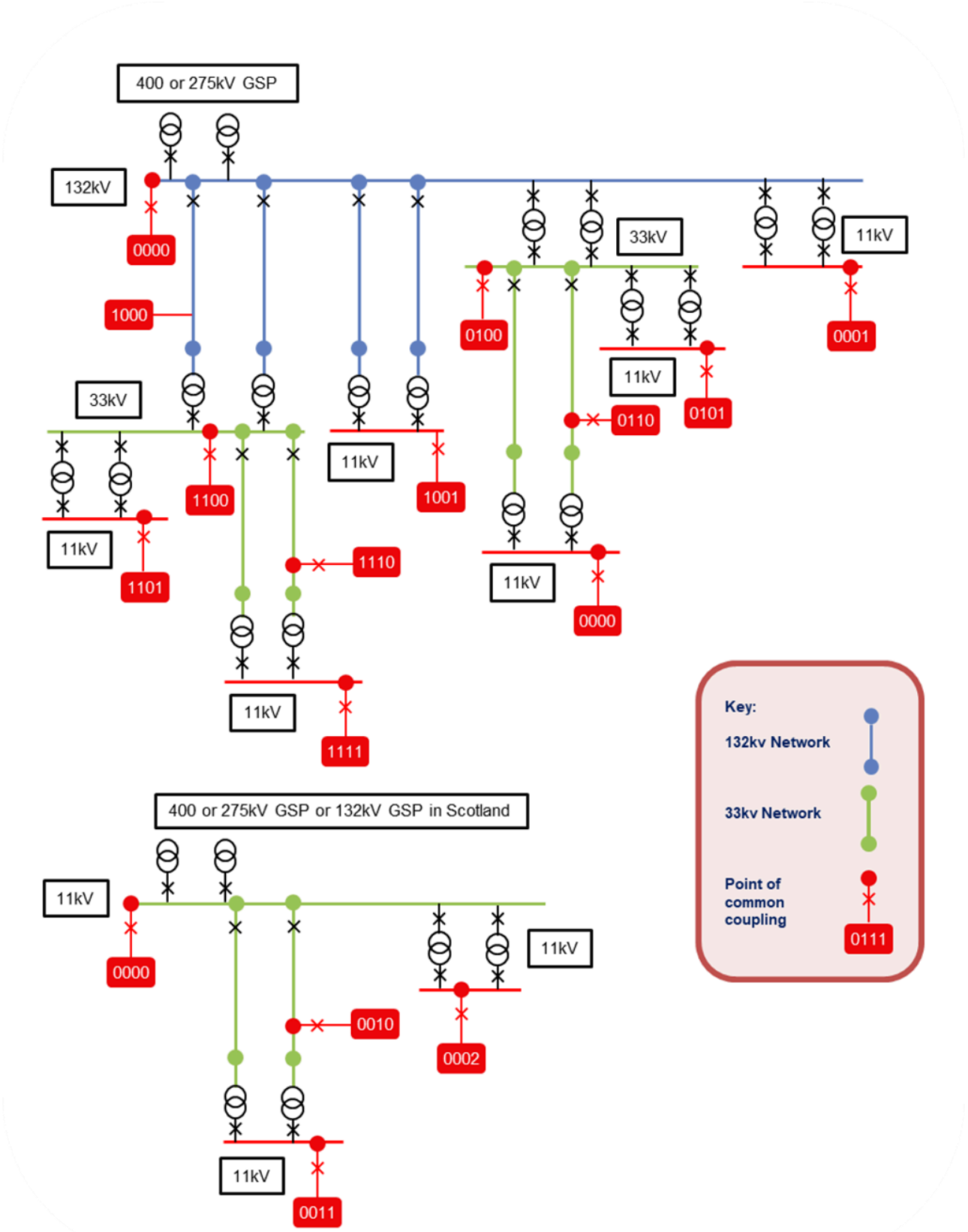

15.9 The use of each network level by each EDCM Connectee is determined according the rules set out in Table 15.9.

Table 15.9 - Use of each network level by each EDCM Connectee

EDCM Customers in category	Level 1	Level 2	Level 3	Level 4	Level 5
Category 0000	Zero	Zero	Zero	Zero	Zero
Category 1000	Capacity kVA	Zero	Zero	Zero	Zero
Category 1100	Peak-time active kW	Capacity kVA	Zero	Zero	Zero
Category 0100	Zero	Capacity kVA	Zero	Zero	Zero
Category 1110	Peak-time active kW	Peak-time active kW	Capacity kVA	Zero	Zero
Category 0110	Zero	Peak-time active kW	Capacity kVA	Zero	Zero
Category 0010	Zero	Zero	Capacity kVA	Zero	Zero
Category 0001	Zero	Zero	Zero	Zero	Capacity kVA
Category 0002	Zero	Zero	Zero	Capacity kVA	Zero
Category 1001	Peak-time active kW	Zero	Zero	Zero	Capacity kVA
Category 0011	Zero	Zero	Peak-time active kW	Capacity kVA	Zero
Category 0111	Zero	Peak-time active kW	Peak-time active kW	Capacity kVA	Zero
Category 0101	Zero	Peak-time active kW	Zero	Capacity kVA	Zero
Category 1101	Peak-time active kW	Peak-time active kW	Zero	Capacity kVA	Zero
Category 1111	Peak-time active kW	Peak-time active kW	Peak-time active kW	Capacity kVA	Zero

15.10 Category 0000 Connectees are deemed not to use any network assets other than sole use assets.

15.11 An average network asset value per kVA (in £/kVA) is calculated in respect of each network level. The average network asset value for the network level of connection is based on the Maximum Import Capacity of the Connectee, and for network levels above on consumption at peak time.

Average network asset value for capacity at level L (£/kVA) = NARL × AE /(1 + DL)

Average network asset value for demand at level L (£/kVA) = NARL × D × LAF

Where:

NAR L is the network asset rate at level L in £/kW based on the 500 MW model.

DL is the Diversity Allowance from the level exit to the GSP group (from CDCM table 2611).

D is the peak time active power consumption in (kW/kVA). This is calculated as the historical peak-time kW divided by historical maximum kVA.

LAF is the loss adjustment factor to transmission from the CDCM for the network level relevant to the EDCM Customer category of that Connectee. See Table 15.11 below for the correspondence between EDCM Customer categories and network levels.

AE is the active power equivalent of capacity adjusted to transmission (in kW/kVA). This is calculated by multiplying the power factor in the 500 MW model (0.95) by the loss adjustment factor to transmission for the network level relevant to that Connectee (as above).

Table 15.11 Customer category relevant network level for loss adjustment factors

Customer categories	Relevant network level for loss adjustment factors
0000	GSP (the loss adjustment factor is always 1 for this network level)
1000	132kV (level 1)
1100 and 0100	132kV/EHV (level 2)
1110, 0110 and 0010	EHV (level 3)

1111, 1101, 0101, 0111, 0011 and 0002	EHV/HV (level 4)
1001 and 0001	132kV/HV (level 5)

15.12 Again, separate site-specific asset values per kVA (in £/kVA) are calculated in respect of each network level. The asset value for the network level of connection is based on the Maximum Import Capacity of the Connectee, and for network levels above on consumption at peak time.

Site-specific asset value for capacity at level L (£/kVA) = NUL × Average network asset value for capacity at level L (£/kVA)

Notional asset value for demand at level L (£/kVA) = NUL × Average network asset value for demand at level L (£/kVA)

Where:

NUL is the network use factor for that Connectee at level L, representing the proportion of the average 500 MW model assets that the Connectee is deemed to use at that level. The methodology to calculate these network use factors is set out in Annex 2 of this Schedule.

Average notional asset value for capacity at level L is the voltage level average calculated as described earlier.

Average notional asset value for demand at level L is the voltage level average calculated as described earlier.

15.13 Network use factors for import charges of a mixed import-export site that is generation-dominated are set to default values. These default values are equal to the “collars” for each network level calculated as described in section on demand scaling. Generation-dominated sites are determined according to the rules set out in the LRIC methodology to determine whether a location is to be modelled as a generation site.

15.14 The total value of the site-specific shared assets required to serve each Connectee is calculated according to the formula:

TNA = NAC + (NAD × (1 - (Hours in super-red for which not a customer/Annual hours in super-red))×(Days in year/(Days in year - Days for which not a customer)))

Where:

TNA is the total site-specific network assets in £/kVA required to serve a Connectee.

NAC is the site-specific asset value in £/kVA for capacity for that Connectee aggregated across all levels.

NAD is the site-specific asset value in £/kVA for demand for that Connectee aggregated across all levels.

15.15 Total site-specific shared assets is the aggregate value (in £) of all site-specific shared assets for EDCM Connectees. This is calculated by multiplying TNA by the Maximum Import Capacity (adjusted, if necessary, for Connectees connected for part of the Charging Year), and then aggregating across all EDCM Connectees.

16. CALCULATION OF THE EDCM DEMAND REVENUE TARGET

16.1 The EDCM demand revenue target is the share of the DNO Party's Allowed Revenue less any revenue relating to recovery of the DNO Party's Supplier of Last Resort and Eligible Bad Debt pass-through costs (excluding transmission exit charges and net revenue from EDCM generation) that will be recovered from EDCM Connectees through import charges.

16.2 This section describes the method used to calculate the EDCM demand revenue target.

16.3 A single contribution rate for network rates is calculated for all EDCM Connectees as follows:

Network rates contribution rate (per cent) = NR / (Total site-specific shared assets + Total EDCM sole use assets + EHV assets + HV and LV network assets + HV and LV service model assets)

Where:

NR is the DNO Party's total expenditure on network rates.

Total site-specific shared assets is the aggregate value (in £) of all site-specific shared assets for EDCM (Load) Connectees.

Total EDCM sole use assets is the aggregate sole use asset MEAVs of all EDCM Connectees, excluding the value of sole use assets associated with exempt export capacity, adjusted for part-year connected Connectees. EHV assets are the aggregate EHV assets in the CDCM model.

HV and LV network assets from the CDCM model.

HV and LV service model assets from the CDCM model.

16.4 A single contribution rate for direct operating costs is calculated for all EDCM Connectees as follows:

Direct operating costs contribution rate (per cent) = DOC / (Total site-specific shared assets + Total EDCM sole use assets + EHV assets + (HV and LV network assets + HV and LV service model assets) / 0.68)

Where:

DOC is the DNO Party's total expenditure on direct operating costs.

Total site-specific shared assets is the aggregate value (in £) of all site-specific shared assets for EDCM Connectees.

Total EDCM sole use assets is the aggregate sole use asset MEAVs of all EDCM Connectees, excluding the value of sole use assets associated with exempt export capacity, adjusted for part-year connected Connectees. EHV assets are the aggregate EHV assets in the CDCM model.

HV and LV network assets from the CDCM model.

HV and LV service model assets from the CDCM model.

0.68 is the operating intensity factor.

16.5 A single contribution rate for indirect costs is calculated for all EDCM Connectees as follows:

Indirect costs contribution rate (per cent) = INDOC / (Total site-specific shared assets + Total EDCM sole use assets + EHV assets + (HV and LV network assets + HV and LV service model assets) / 0.68)

Where:

INDOC is the DNO Party's total expenditure on indirect costs.

Total site-specific shared assets is the aggregate value (in £) of all site-specific shared assets for EDCM Connectees.

Total EDCM sole use assets is the aggregate sole use asset MEAVs of all EDCM Connectees, excluding the value of sole use assets associated with exempt export capacity, adjusted for part-year connected Connectee. EHV assets are the aggregate EHV assets in the CDCM model.

HV and LV network assets from the CDCM model.

HV and LV service model assets from the CDCM model.

0.68 is the operating intensity factor.

16.6 Next, a residual revenue contribution rate is calculated as follows:

Residual revenue contribution rate (per cent) = (AR - DOC - INDOC - NR - GCN) / (Total site-specific shared assets + EHV assets + HV and LV network assets)

Where:

AR is the DNO Party's total Allowed Revenue excluding transmission exit charges in £/year and excluding any revenue relating to recovery of the DNO Party's Supplier of Last Resort and Eligible Bad Debt pass-through costs.

DOC is the DNO Party's total expenditure on direct operating costs.

INDOC is the DNO Party's total expenditure on indirect costs.

NR is the DNO Party's total expenditure on network rates.

GCN is the total forecast net revenue in £/year from the application of EDCM export charges, including the EDCM generation fixed charge. This amount is estimated by applying the calculated EDCM export charges rounded to the relevant number of decimal points.

Total site-specific shared assets is the aggregate value (in £) of all site-specific shared assets for EDCM Connectees.

EHV assets are the aggregate EHV assets in the CDCM model.

HV and LV network assets from the CDCM model.

16.7 The contribution rates for network rates, direct costs, indirect costs and residual revenue is converted into a £/year import capacity based contribution and a demand sole use asset MEAV based contribution for each EDCM Connectee.

Import capacity based network rates contribution for each Connectee = TNA × NR rate × import capacity

Import capacity based direct operating costs contribution for each Connectee = TNA × DOC rate × import capacity

Import capacity based indirect costs contribution for each Connectee = TNA × INDOC rate × import capacity

Import capacity based residual revenue contribution for each Connectee = TNA × residual revenue rate × import capacity

Where:

TNA is the total site-specific assets (£/kVA) for that EDCM Connectee.

NR rate is the network rates contribution rate in per cent.

DOC rate is the direct operating costs contribution rate in per cent.

INDOC rate is the indirect costs contribution rate in per cent.

Residual revenue rate is the residual revenue contribution rate in per cent.

Import capacity is the Maximum Import Capacity (adjusted, if necessary, if the Connectee is connected for part of the Charging Year) in kVA for that EDCM Connectee.

16.8 The demand sole use asset MEAV based contribution in £/year is calculated as follows:

Demand sole use asset based network rates contribution = S × NR rate

Demand sole use asset based direct operating costs contribution = S × DOC rate

Demand sole use asset based indirect costs contribution = S × INDOC rate

Where

S is the MEAV of demand sole use assets of that EDCM Connectee (adjusted for Connectees connected for part of the Charging Year).

NR rate is the network rates contribution rate in per cent.

DOC rate is the direct operating costs contribution rate in per cent.

INDOC rate is the indirect costs contribution rate in per cent.

16.9 The target contributions from import capacity and sole use assets are aggregated across all EDCM Connectees.

16.10 The aggregate EDCM demand revenue target is calculated as the sum, across all EDCM demand, of the contributions based on import capacities and demand sole use assets, less the total reduction in fixed charges made to EDCM customers under paragraph 17.2. Such fixed charge reduction is to be derived as follows:

FCR = OMR × (EHV assets + HV and LV network assets) / (Total site-specific shared assets + EHV assets + HV and LV network assets)

Where

OMR is the total reduction in fixed charges made to EDCM customers under paragraph 17.2, where the reduction is derived as the aggregated value of the amount each EDCM customer would have paid under

paragraph 17.1 less the amount paid under 17.2 for eligible customers.

17. FIXED CHARGES FOR IMPORT AND EXPORT

17.1 The contribution rates for network rates and direct operating costs are converted into a p/day fixed charge for the sole use assets of each EDCM Connectee as follows:

Import fixed charge on sole use assets in p/day = 100 / DC × SD × (NR contribution rate + DOC contribution rate)

Export fixed charge on sole use assets in p/day = 100 / DC × SG × (NR contribution rate + DOC contribution rate)

Where

DC is the number of days in the Charging Year.

SD is the MEAV of sole use assets allocated to demand of that EDCM Connectee.

SG is the MEAV of sole use assets allocated to generation of that EDCM Connectee excluding the value of sole use assets associated with exempt export capacity.

NR contribution rate is the network rates contribution rate in per cent.

DOC contribution rate is the direct operating costs contribution rate in per cent.

17.2 Where a customer demonstrates with written evidence to the DNO Party (or where the DNO Party has written evidence) that the customer (or its predecessors) made a capitalised O&M payment in respect of a connection to the DNO Party's network, and the period over which the O&M payment was capitalised remains unexpired, then the import fixed charge will be calculated as set out below (and the calculation for the import fixed charge in paragraph 17.1 will not apply).

The sole use assets will be split between those where capitalised O&M has been paid and those where it has not, and the fixed charge will be derived as follows:

p/day = (((DOC rate + NR rate) × SUA MEAVU) + (NR rate × SUA MEAVP)) / (days in Charging Year) × 100

Where:

DOC rate is the direct operating costs contribution rate in per cent;

NR rate is the network rates contribution rate in per cent;

Where SUA MEAVU is the Modern Equivalent Asset Value of Sole Use Assets where capitalised O&M has not been paid (or the period over which it was to be capitalised has expired);

and SUA MEAVP is the Modern Equivalent Asset Value of Sole Use Assets where capitalised O&M has been paid (and the period over which it was to be capitalised has not expired).

17.3 For customers that are classified as exempt pre-2005 EDCM Distributed Generators (DGs), it is deemed for the purposes of paragraph 17.2 that the customer paid capitalised O&M to be capitalised over a period of 25 years from connection.

18. DEMAND SCALING

18.1 Demand scaling is the process by which import charges to EDCM Connectees are set so that the forecast notional recovery from the application of those import charges to EDCM Connectees matches the EDCM demand revenue target.

18.2 Demand scaling using the site-specific assets approach involves the following steps:

- Calculating adjusted site-specific shared asset values for each Connectee using network use factors that have been subjected to a cap and collar.
- Allocation of the direct operating cost and network rates elements in the EDCM demand revenue target to individual EDCM Connectees on the basis of adjusted site-specific assets and sole use assets. [a]
- Allocation of the indirect cost element in the EDCM demand revenue target to individual EDCM Connectees on the basis of their consumption at the time of the DNO Party's peak and 50 per cent of Maximum Import Capacity as a p/kVA/day charge. [b]
- Forecasting the notional recoveries from the application of FCP charges to EDCM Connectee. [c]
- Application of residual charges is provided for in accordance with paragraph 18.18 below.

18.3 Adjusted site-specific assets are calculated using network use factors that have been subjected to caps and collars.

18.4 A cap and a collar are calculated for each network level as follows:

- In ascending order, list the network use factors for all EDCM Connectees in all DNO Party areas relating to that network level, excluding all the factors that are either equal to zero or 1, or not used, based on the customer categories of each EDCM Connectee.
- Divide the list into two segments, one that contains factors that are lower than 1, and the other than contains the factors that are higher than 1.
- Take the list segment containing factors that are lower than 1. Starting from the lowest factor in this list segment, calculate the factor at the 15th percentile. This is the collar.
- Take the list segment containing factors higher than 1. Starting from the lowest factor in this segment, calculate the factor at the 85th percentile. This is the cap.

18.5 The same cap and collar would apply in all DNO Party areas to network use factors at that network level.

18.6 The caps and collars are recalculated triennially, with the three year cycle having being established when caps and collars were calculated when determining 2017/18 charges (in 2015). In years where a recalculation has not been carried out, the values used remain at the most recently calculated values.

18.7 Where year t is a charging year for which the caps and collars are being recalculated, the caps and collars calculated and used for years t, t+1 and t+2 will be based on applying the calculation detailed in paragraph 18.4 to the average of network use factors which were used in the calculation of charges applicable to years t-3, t-2 and t-1.

18.8 The network use factor caps and collars that are updated in accordance with paragraphs 18.6 and 18.7 will be maintained by the DNO Parties and referenced within the EDCM user manual.

18.9 Separate adjusted site-specific asset values per kVA (in £/kVA) is calculated in respect of each network level. The asset value for the network level of connection is based on the Maximum Import Capacity of the EDCM Connectee, and for network levels above on consumption at peak time.

Adjusted site-specific asset value for capacity at level L (£/kVA) = NUaL × Average network asset value for capacity at level L (£/kVA)

Adjusted site-specific asset value for demand at level L (£/kVA) = NUaL × Average network asset value for demand at level L (£/kVA)

Where:

NUaL is the adjusted network use factor for that EDCM Connectee at level L after application of the cap and collar.

Average notional asset value for capacity at level L is the voltage level average calculated as described earlier.

Average notional asset value for demand at level L is the voltage level average calculated as described earlier.

18.10 The total value of the adjusted site-specific shared assets required to serve each EDCM Connectee is calculated according to the formula:

TNAa = NACa + (NADa × (1 - (Hours in super-red for which not a customer/Annual hours in super-red))×(Days in year / (Days in year - Days for which not a customer)))

Where:

TNAa is the total adjusted site-specific network assets in £/kVA required to serve a EDCM Connectee.

NACa is the adjusted site-specific asset value in £/kVA for capacity for that EDCM Connectee aggregated across all levels.

NADa is the adjusted site-specific asset value in £/kVA for demand for that EDCM Connectee aggregated across all levels.

18.11 Total adjusted site-specific shared assets for all EDCM demand is the aggregate value (in £) of all adjusted site-specific shared assets for EDCM Connectees. This is calculated by multiplying TNAa by the Maximum Import Capacity (adjusted, if necessary, for Connectees connected for part of the Charging Year), and then aggregating across all EDCM demand.

18.12 The direct cost and network rates allocations to individual demand Connectees is determined in the same way as the contributions to the EDCM demand revenue target was calculated, except that adjusted site-specific assets are used.

18.13 A single asset based charging rate for network rates is calculated for all EDCM Connectee. This is calculated as follows:

Network rates charging rate (per cent) = EDCM NR contribution / (Total adjusted site-specific shared assets)

Where:

EDCM NR contribution is the sum of the import capacity based network rates contribution from each EDCM Connectee.

Total adjusted site-specific shared assets is the aggregate value (in £) of all adjusted site-specific shared assets for EDCM Connectees.

18.14 A single asset based charging rate for direct operating costs is calculated for all EDCM Connectees. This is calculated as follows:

Direct operating costs charging rate (per cent) = EDCM DOC contribution / (Total adjusted site-specific shared assets)

Where:

EDCM DOC contribution is the sum of the import capacity based direct costs contribution from each EDCM Connectee.

Total adjusted site-specific shared assets is the aggregate value (in £) of all adjusted site-specific shared assets for EDCM Connectees.

18.15 The charging rates for network rates and direct operating costs are converted into p/kVA/day import capacity based charges for each EDCM Connectee.

Network rates and direct costs charge in p/kVA/day = (100 / DC) × TNAa × (NR rate + DOC rate)

Where:

DC is the number of days in the Charging Year.

TNAa is the total adjusted site-specific assets (£/kVA) for that EDCM Connectee.

NR rate is the network rates charge rate in per cent.

DOC rate is the direct operating costs charge rate in per cent.

18.16 A p/kVA/day charging rate for indirect costs for each EDCM Connectee is calculated on the basis of historical demand at the time of the DNO Party's peak and 50 per cent of Maximum Import Capacity of that Connectee.

Indirect cost charging rate in p/kVA/day = 100 / DC × (Aggregate indirect cost contribution) / Volume for scaling

Where:

DC is the number of days in the Charging Year.

Volume for scaling is calculated as the sum of (0.5 + coincidence factor) × import capacity × LDNO factor across all EDCM Connectees.

Coincidence factor is calculated as the forecast peak-time consumption in kW divided by Maximum Import Capacity in kVA of that Connectee (based on historical data) multiplied by (1 - (Hours in super-red for which not a customer/Annual hours in super-red))×(Days in year/(Days in year - Days for which not a customer))

Import capacity is the Maximum Import Capacity (adjusted if the Connectee is connected for part of the Charging Year) in kVA for that EDCM Connectee.

LDNO factor takes the value 0.5 if the EDCM Connectee is connected to a LDNO's network and 1 otherwise.

Aggregate indirect cost contribution is the sum of the import capacity based and sole use asset based indirect cost contribution from each EDCM Connectee.

18.17 The p/kVA/day charging rate for indirect costs is converted into an import capacity based charge for each EDCM Connectee as follows:

Import capacity based INDOC charge in p/kVA/day = Indirect cost charging rate × (0.5 + coincidence factor) × LDNO factor

Where:

Indirect cost charging rate is the Distribution System-wide p/kVA/day rate calculated as described in the previous paragraph.

Coincidence factor is calculated as the forecast peak-time consumption in kW divided by Maximum Import Capacity in kVA of that Connectee (based on historical data) multiplied by (1 - (Hours in super-red for which not a customer/Annual hours in super-red))×(Days in year/(Days in year - Days for which not a customer))

LDNO factor takes the value 0.5 if the EDCM Connectee is connected to a LDNO's network and 1 otherwise.

18.18 Residual charges will be allocated as follows:

- The difference between the EDCM demand revenue target and the sum of a, b and c under Paragraph 18.2 above will be apportioned to specific charging bands as set out in paragraph 2.4 of Schedule 32, according to the total forecast metered import consumption for the charging band proportionate to the total forecast metered import consumption for all Final Demand Sites which are EHV Designated Properties.
- The allocated proportion of the residual value to each charging band will then be divided equally among all Final Demand Sites within that charging band, resulting in the same level of residual fixed charge for each such site.
- Residual charges for each Final Demand Site will be applied as a fixed charge adder (p/Final Demand Site/day) calculated as follows: the revenue surplus or shortfall (in pence) to be returned or recovered for the band that the Final Demand Site is in; divided by the total number of Final Demand Sites in that band; divided by days in the charging year.
- For any DNO Party, if the count of Final Demand Sites in any given charging band is less than two in the charging year for which tariffs are being determined, the residual fixed charge for that band will be calculated as set out in accordance with the bullet points above, but the total forecast metered import consumption and total count of Final Demand Sites in that band will be combined with the equivalent information for the band above that band. If the band in question is the highest band, then it will be combined with the equivalent information for the band below that band. The residual fixed charge should therefore be the same for all Final Demand Sites in the combined bands. There must be no single or combined band with less than two Final Demand Sites within that band. A Final Demand Site connected during the year will be counted as a fraction based on the proportion of the year for which the site was connected.
- There are eight possible combinations for grouping non-domestic charging bands under the above bullet point. Where there are less than two Final Demand Sites in a band the grouping of the bands under the above bullet point will be in accordance with the preference order given in the table below.

Preference order for band grouping combinations	Band 1	Band 2	Band 3	Band 4
First	1	2	3	4
Second	1 + 2		3	4
Third	1	2 + 3		4
Fourth	1	2	3 + 4	
Fifth		1 + 2		3 + 4
Sixth	1 + 2 + 3			4
Seventh	1	2 + 3 + 4		
Eighth	1 + 2 + 3 + 4			

- In all cases, residual fixed charge component will be added to the fixed charge component to create a single fixed charge.

18.19 Not Used.

18.20 Not Used.

18.21 Not Used.

18.21.A The fixed adder for a Non-Final Demand Site shall be zero.

19. APPLICATION OF EDCM CHARGES FOR EDCM CONNECTEES

19.1 The tariff application rules for the EDCM are the same as for the CDCM wherever possible. Each component of each tariff is rounded to the nearest value with no more than three decimal places in the case of unit rates expressed in p/kWh, and with no more than two decimal places in the case of fixed and capacity charges expressed in p/day and p/kVA/day respectively.

19.2 The part of EDCM portfolio tariffs (for LDNO networks and Distribution Licence exempt networks) that is based on CDCM tariffs will be billed like CDCM tariffs.

19.3 Final EDCM demand charges will have:

1. an import fixed charge (in p/day)
2. an import capacity charge (in p/kVA/day)
3. an import super-red unit rate charge (in p/kWh)
4. an exceeded import capacity charge (in p/kVA/day).

19.4 The import fixed charge for each EDCM Connectee in p/day would be calculated as follows:

EDCM import fixed charge (p/day) = [LRIC fixed charge on sole use assets in p/day] + [residual fixed charge in p/day].

19.5 The final EDCM import capacity charge for each EDCM Connectee in p/kVA/day would be calculated as follows:

EDCM import capacity charge (p/kVA/day) = [LRIC p/kVA/day capacity charge] + [Transmission exit charge p/kVA/day] + [Network rates and direct costs charge in p/kVA/day] + [Indirect costs charge in p/kVA/day]

19.6 The final EDCM super-red unit rate in p/kWh is the LRIC super-red unit rate as calculated as described earlier in this document.

19.7 If the EDCM import capacity charge (p/kVA/day) calculated above is negative and the Connectee's average kW/kVA (adjusted for part year) is not equal to zero, the final EDCM super-red unit rate is adjusted as follows:

Adjusted LRIC super-red unit rate in p/kWh = [LRIC super-red rate in p/kWh] + ([EDCM import capacity charge (p/kVA/day)] × ([Days in the Charging Year] - [Days for which not a customer]) / [Average kW/kVA] / ([hours in the super-red time band] - [Hours in super-red for which not a customer]))

19.8 Finally, any remaining negative import super-red unit rates or import capacity charges are set to zero.

19.9 Final EDCM export charges will have:

1. An export fixed charge on sole use assets (in p/day)
2. An export capacity charge (in p/kVA/day), which might include transmission exit credits to qualifying generators.
3. An export super-red unit rate (in p/kWh)
4. An exceeded export capacity charge (in p/kVA/day)

19.10 The export capacity charge (in p/kVA/day) is applied to the Chargeable Export Capacity of EDCM Connectees.

19.11 The export super-red unit rate (in p/kWh) is applied to active power units exported during the DNO Party's super-red time band.

20. EXCEEDED CAPACITY CHARGES

20.1 Where a Connectee uses additional capacity over and above the Maximum Import Capacity or Maximum Export Capacity without authorisation, the excess is classed as exceeded capacity.

20.2 For the purposes of determining capacity used, the following formula is used for each half hour:

Import capacity used = 2 × (SQRT(AI^2 + MAX(RI,RE)^2))

Where:

AI = Import consumption in kWh

RI = Reactive import in kVArh

RE = Reactive export in kVArh

Export capacity used = 2 × (SQRT(AE^2 + MAX(RI,RE)^2))

Where:

AE = Export production in kWh

RI = Reactive import in kVArh

RE = Reactive export in kVArh

20.3 For the purposes of calculating exceeded capacity for import charges, any reactive flows during half hours when there is no active power import would not be taken into account.

20.4 For the purposes of calculating exceeded capacity for export charges, any reactive flows during half hours when there is no active power export will not be taken into account.

20.5 Any reactive flows associated with a site which operates subject to grid code requirements for generation or sites providing voltage control at the request of the DNO Party would not be taken into account when calculating import or export capacity used.

20.6 For Connectees other than those that have an agreement with the DNO, the terms of which require them, for the purposes of P2/6 compliance, to export power during supergrid transformer (SGT) outage conditions, the exceeded portion of the export capacity is charged at the same rate as the capacity that is within the Maximum Export Capacity. This is charged for the duration of the month in which the breach occurs.

20.7 For Connectees other than those with DSM agreements, the exceeded portion of the import capacity is charged at the same rate as the capacity that is within the Maximum Import Capacity. This is charged for the duration of the month in which the breach occurs.

20.8 Sites subject to DSM arrangements would normally pay the DSM-adjusted capacity charge for capacity usage up to their Maximum Import Capacities.

20.9 If sites with DSM agreements were to exceed their maximum import capacities, the exceeded portion of the capacity will be charged at a different rate. This will be charged for the duration of the month in which the breach occurs. This charge for exceeded capacity (in p/kVA/day) would be determined as follows;

[Exceeded capacity charge in p/kVA/day] = [Import capacity charge p/kVA/day] + (([LRIC capacity charge p/kVA/day] + ([LRIC super-red rate p/kWh] × [Average kW/kVA adjusted for part year] × [super-red hours] / ([days in Charging Year] - [Days for which not a customer])) × (1 - ([chargeable capacity]/ [Maximum Import Capacity]))

Where:

The LRIC super-red unit rate and LRIC capacity charges in the equation above are the charges before any adjustments for DSM have been made.

21. APPLICATION OF EDCM IMPORT CHARGE COMPONENTS

21.1 Table 21.1 summarises the method of application of import charge components.

Table 21.1 Application of EDCM import charge components

Tariff component	Unit	Application
Import fixed charge	p/day	Applied as a fixed charge.
Import capacity charge	p/kVA/day	Applied to the Maximum Import Capacity.
Exceeded import capacity charge	p/kVA/day	Applied to exceeded capacity for the duration of the month in which the breach occurs (except for sites which operates subject to grid code requirements for generation)
Import super-red unit rate	p/kWh	Applied to active power units consumed during the DNO Party's super-red time band.

21.2 Table 21.2 summarises the method of application of export charge components.

Table 21.2 Application of EDCM export charge components

Tariff component	Unit	Application
Export fixed charge	p/day	Applied as a fixed charge.
Export capacity charge	p/kVA/day	Applied to the Chargeable Export Capacity.
Exceeded export capacity charge	p/kVA/day	Applied to exceeded capacity for the duration of the month in which the breach occurs (except for sites which operates subject to grid code requirements for generation)
Export super-red unit rate	p/kWh	Applied to active power units exported during the DNO Party's super-red time band.

22. CHARGES FOR NEW CONNECTEES

22.1 New Connectees could connect at any time between the publication of EDCM charges for the new Charging Year and the end of that Charging Year.

22.2 If the connection of such Connectees had been anticipated before the publication of charges, the DNO Party would have included forecast data relating to the new Connectee in both the power flow model and the EDCM tariff model. The resulting tariff is applied to the new Connectee, on a pro-rata basis if the price is produced during the Charging Year.

22.3 If prices need to be produced for new connections that had not been anticipated at the time of calculating EDCM charges for that Charging Year, the DNO Party will:

- Seek indicative load profile information from the new Connectee, failing that, make a reasonable estimate;
- Run the power flow model after including the new Connectee to produce a full set of charges 1 and 2, including for the new Connectee;
- Include the new Connectee's details, including marginal charges from (a) in the EDCM tariff model, to produce a full set of new charges;
- Use the tariff relating to the new Connectee to calculate charges; and
- Charges relating to the current year for existing Connectees would not change as a result.

22.4 If a Connectee were to change their maximum import or export capacity at any time between the publication of EDCM charges for the Charging Year and the end of the Charging Year, the published tariff rates would continue to apply for the duration of the Charging Year.

23. DNO TO DNO CHARGES

23.1 In the case of DNO Party to DNO Party interconnections, the interconnections are categorised into four types:

a. The interconnector between the DNO Parties is normally closed (active), and there is an identifiable benefit from the existence of the interconnection to one DNO Party only. The other DNO Party does not benefit from the interconnection.
b. The interconnector is normally closed (active), and there is either an identifiable benefit to both DNO Parties, or no clear benefit to either DNO Party.
c. The interconnector is normally open, and the interconnection exists only to provide backup under certain conditions to either DNO Party.
d. ll other interconnections between DNO Parties.

23.2 In all cases of type (a), the benefitting DNO Party will be treated as being equivalent to an EDCM Connectee connected to the other DNO Party's network. The DNO Party providing the benefit will calculate and apply

EDCM import charges, except charges for sole use assets. as applicable to the other DNO Party. Export charges or credits will not apply.

23.3 In the case of type (b) interconnections, each DNO Party will treat the other as an EDCM Connectee. Normal EDCM import charges, except charges for sole use assets, will apply. Export charges or credits will not apply.

23.4 Type (c) interconnections are typically covered by special arrangements between DNO Parties. Use of system charges are agreed between DNO Parties and applied outside the EDCM model.

23.5 In every other case, each DNO Party applies import charges to the other as a normal EDCM Connectee, as with type (b) interconnections.

24. LDNO CHARGING

24.1 LDNOs with Distribution Systems that serve Connectees that fall within the scope of the CDCM would have their charges based on standard discount percentages applied to the CDCM all-the-way end user charges.

A LDNO with a Distribution System that qualifies as a CDCM “Designated Property” according to the definition set out in condition 13A.6 of the Distribution Licence is eligible for portfolio discounts calculated using the price control disaggregation model provided for under Schedule 29, with any subsequent adjustment applied in respect of the DNO Party's Supplier of Last Resort and Eligible Bad Debt pass-through costs as described in paragraphs 100 to 104 of the CDCM.

A LDNO with a Distribution System that qualifies as an EDCM “Designated EHV Property” according to the definition set out in condition 13B.6 of the Distribution Licence is are eligible for discounts calculated using the price control disaggregation model provided for under Schedule 29, with any subsequent adjustment applied in respect of the DNO Party's Supplier of Last Resort and Eligible Bad Debt pass-through costs as described in paragraphs 100 to 104 of the CDCM.

24.2 A LDNO with a Distribution System that qualifies as an EDCM “Designated EHV Property” could itself have Connectees who would fall under the scope of the EDCM. Since the EDCM is a locational charging method, the host DNO Party would calculate EDCM charges at the DNO Party's boundary for each EDCM-like Connectee on the LDNO's Distribution System. No discounts are calculated for such EDCM Connectees as the DNO Party's charges are based only on the specific site's equivalent use of the DNO Party's Distribution System.

25. CALCULATION OF LDNO DISCOUNTS

25.1 The discount percentages are determined in accordance with Schedule 29, which is deemed to form part of this EDCM (as if it were set out herein).

25.2 In each case, the discount applied to all CDCM tariff components. Discount percentages are capped to 100 per cent.

25.3 Supplier of Last Resort pass-through costs are allocated by applying a fixed charge adder (p/day) to the following customer groups, as calculated under paragraph 102 of the CDCM:

- LDNO HVplus: Domestic Aggregated or CT;
- LDNO EHV: Domestic Aggregated or CT;

- LDNO 132kV/EHV: Domestic Aggregated or CT;
- LDNO 132kV: Domestic Aggregated or CT;
- LDNO 0000: Domestic Aggregated or CT.

25.4 Eligible Bad Debt pass-through costs are allocated by applying a fixed charge adder (p/day) to all metered demand tariffs excluding 'related MPAN' tariffs, as calculated under paragraph 103 of Schedule 16.

25.5 Not used.

25.6 Not used.

25.7 Not used.

25.8 Not used.

25.9 Not used.

25.10 Not used.

25.11 Not used.

25.12 Not used.

25.13 Not used.

25.14 Not used.

25.15 Not used.

25.16 Not used.

25.17 Not used.

25.18 Not used.

25.19 Not used.

26. PORTFOLIO EDCM TARIFFS FOR CONNECTEES IN THE EDCM

26.1 For Connectees on a LDNO's Distribution System that would be covered by the EDCM if they were on the DNO Party's Distribution System, the EDCM is applied to calculate a portfolio EDCM charge/credit for each such Connectee.

26.2 These EDCM portfolio charges would be calculated as if each EDCM Connectee on the LDNO's Distribution System were notionally connected at the boundary between the DNO Party and the LDNO; except for LDNO UMS tariffs, which are charged by reference to the voltage of the Points of Connection that provide the majority of the energised domestic connections for the LDNO in the GSP Group (or, where there is no such majority, on such other reasonable basis as the DNO Party determines). Both EDCM import and export charges will apply.

26.3 For the purposes of calculating the boundary-equivalent portfolio EDCM tariffs, each EDCM Connectee on the LDNO's Distribution System would be assigned the demand Connectee category determined by

reference to that LDNO Distribution System's Point of Common Coupling. The demand Connectee category is assigned as per Table 15.6.

26.4 Such Connectees would attract charges (credits) in respect of any reinforcements caused (avoided) on the DNO Party's Distribution System only, i.e. any network Branches that are on the LDNO's Distribution System would be attributed a zero LRIC charge/credit.

26.5 The setting of final charges to Embedded Designated EHV Properties including the calculation of charges for assets used on the LDNO's Distribution System will be established by the LDNO.

26.6 All EDCM charges would be calculated using “boundary equivalent” data provided by the LDNO to the host DNO Party for each Embedded Designated EHV Property. For the purposes of the EDCM, boundary equivalent data should be what the LDNO has allowed for at the DNO Party - LDNO boundary, for each EDCM Connectee, after taking into consideration the diversity and losses within the LDNO's Distribution System. Data relating to CDCM end users must be considered for the purposes of calculating boundary equivalent data in order to cater for the effect of diversity and losses.

26.7 The EDCM will include in the charges for Embedded Designated EHV Properties a fixed charge relating to any assets on the DNO Party's Distribution System that are for the sole use of a LDNO Party's Distribution System. The assets on the DNO Party's network that are for the sole use of a LDNO Distribution System are defined as the assets in which only consumption or output associated with Embedded customers on the LDNO Distribution System can directly alter the power flow in the asset, taking into consideration all possible credible running arrangements, i.e. all assets between the asset ownership boundary and the LDNO Distribution System's Point of Common Coupling are considered as sole use assets. These fixed charges would be calculated in the same way as it would be for EDCM Connectees connected directly to the host DNO Party's Distribution System.

26.8 In calculating charges for assets on the DNO Party's Distribution System that are for the sole use of a LDNO Party's Distribution System, DNO Party's will charge only for the proportion of sole use assets deemed to be used by Embedded Designated EHV Properties. This proportion will be calculated, in respect of each Embedded Designated EHV Properties, as the ratio of the boundary equivalent capacity of that Connectee to the capacity at the LDNO - DNO Party boundary.

26.9 If there are no Embedded Designated EHV Properties on the LDNO's Distribution System, no sole use asset charges would apply.

26.10 Demand scaling would be applied as normal to any EDCM portfolio tariff in respect of an EDCM Connectee. For the purposes of scaling, all EDCM Connectees connected to the LDNO's Distribution System will be treated as notional EDCM Connectees connected to the DNO Party's Distribution System with a Point of Common Coupling at the LDNO Distribution System's Point of Common Coupling.

26.11 For EDCM Connectees connected to the LDNO's Distribution System, the capacity-based charge for the DNO Party's indirect costs and 20% of the residual fixed charge for the EDCM Connectee, would be scaled down by a factor of 50 per cent, however, the scaling down will not apply where the residual revenue is negative.

27. OFFSHORE NETWORKS CHARGING

27.1 The DNO Party will treat offshore networks connected to the DNO Party as if they were EDCM Connectees.

27.2 The DNO Party will apply the EDCM to calculate an import charge and an export charge based on capacity at the boundary and power flow data metered at the boundary.

27.3 Any sole use assets specific to the offshore network are charged as a p/day sole use asset charge calculated as applicable to a normal EDCM Connectee.

27.4 Demand scaling will also be applied.

28. DNO PARTY TO UNLICENSED NETWORKS

28.1

Unlicensed networks have a choice. If they are part of the Total System under the Balancing and Settlement Code with the network open to supply competition, and if they are party to the DCUSA, and have accepted the obligations to provide the necessary data, they can, if they wish, be treated as LDNOs.

28.2 Otherwise, the DNO Party applies the EDCM to calculate an import charge and an export charge based on capacity and power flow data metered at the boundary. Any sole use assets specific to the unlicensed network are charged as a p/day sole use asset charge calculated as applicable to a normal EDCM Connectee.

29. DERIVATION OF 'NETWORK USE FACTORS'

Step 1

29.1 Powerflow analysis is used to determine the change in powerflow in each Branch (in MW) that is caused by a change in load (in MW) at each node in the EHV network model, that represents either EDCM demand or CDCM demand at the EHV/HV boundary.

29.2 In essence, a change in load of X MW is applied at the node under consideration and changes in powerflow in each network Branch are identified. If the change in powerflow in a particular Branch is Y MW, as a result in the change in load at the node under consideration, then the 'Change In Branch Flow per Change In Demand' is given by:-

Abs (Y/X) (MW Branch flow per MW of demand at node)

29.3 The effects of a change in demand at each node, upon the powerflows in Branches, are evaluated for each node in turn.

29.4 The method of evaluating the 'Change in Branch Flow per Change in Demand' shall be the Incremental Method, described below:

30. INCREMENTAL METHOD

30.1 Establish the 'base case' powerflow in each Branch using a network model constructed with demand data used to represent the Maximum Demand Scenario analysed in the marginal cost calculation, using Maximum Demand Data that represents the regulatory year that use of system charges are being calculated for.

30.2 Apply a 0.1MW (at 0.95 lagging p.f.) increment to each node, in turn, in the EHV network model (at nodes that represent either an EDCM Connectee or CDCM demand at the EHV/HV boundary) and identify the change in powerflow (in MW) in all Branches where the change exceeds both 1kVA and 0.01% of the 'base

case' powerflow in the Branch. The change in Branch flow corresponding to a 0.1MW increment at a node can be evaluated by actual application of an increment to the network model, or through the use of sensitivity coefficients. Prior to the application of the increment all the transformer tap positions, distributed generation outputs and switched shunt values are fixed to the values determined in the 'base case' powerflow to prevent change in their values when analysing the power flows with the increment applied.

30.3 This calculation is performed upon the Authorised Network Model and only considers normal running arrangements.

Step 2

30.4 The 'MW usage' of each Branch by a given nodal demand is determined by multiplying the relevant value of 'Change In Branch Flow per Change In Demand' (derived in step 1) by the demand at the node (MW) as used in the Maximum Demand Scenario for the marginal cost calculation, using the Maximum Demand Data that represents the regulatory year that use of system charges are being calculated for. This will always be a positive quantity.

Step 3

30.5 For each Branch, the 'total MW usage' of the Branch by all nodal demands is determined by summating the 'MW usage of the Branch' by each node (as determined in step 2).

Step 4

30.6 Each nodal demand's proportionate usage of a Branch is determined using the equation below:

Alloc (£/year) = ([MW usage] / [Total MW usage]) × (Abs [Max contingency flow] / [Rating]) × AMEAV

If the Branch is “generation-dominated”, or (2 × Abs [Base flow load]) ≤ Abs ([Base flow] - [Base flow load]), then use:

Alloc (£/year) = ([MW usage] / [Total MW usage]) × (Abs [Max contingency flow] / [Rating]) × Abs ([Base flow load] / [Base flow]) × AMEAV

Where:

- Alloc is the allocation of the AMEAV of the asset to a demand user in £/year
- MW usage is the absolute value of the “MW usage” of the asset attributable to that demand user (expressed in MW)
- Total MW usage is the sum of the absolute values of the “MW usage” of all demand users of that asset (expressed in MW)
- Max contingency flow is the maximum post-contingent flow through the asset in MVA. The maximum post-contingency asset flows may be extracted from the 'locational' analyses.
- Rating is the unadjusted rated capacity of the asset in MVA
- Base flow load is the algebraic sum of power flows through the Branch due to demand only in MW.
- Base flow is the aggregate power flow through the Branch under normal network operation in MW.
- AMEAV is the annualised modern equivalent asset value in £/year of that asset.
- The ratio ([Max contingency flow] / [Rating]) is called the asset utilisation factor and it is capped at 1.

The quantity (Abs [Max contingency flow] / [Rating]) × Abs ([Base flow load] / [Base flow]) is called the load utilisation factor.

30.7 Sole use assets are not to be included in the calculation of the MEAV of the Branches and consequently some Branches may have an MEAV of zero.

Step 5

30.8 For each node, the £/annum 'usage' of Branches (calculated in Step 4) of the same voltage level, by the demand at the node, are summated to create a total £/annum for each voltage level for the nodal demand. The considered voltage levels correspond to those used in the CDCM and include voltage levels that represent transformation between two voltages. These voltage levels are '132kV', '132kV/EHV', 'EHV', 'EHV/HV' and '132kV/HV'.

30.9 For each node where EDCM demand is present, the total £/annum 'usage' of Branches of each voltage level, for the node, is divided by the demand at the node (in kW), as used in the Maximum Demand Scenario, to create a £/kW/annum total usage of Branches at each voltage level by the particular node. This shall be the numerator in the network use factor, for a particular voltage level, for the EDCM demand node.

30.10 For all nodes where CDCM demand is present, and the CDCM demand is considered to be 'dominant' at the node (CDCM demand shall be considered to be 'dominant' where the DNO Party estimates that the maximum demand associated with all CDCM demand at the node exceeds the maximum demand associated with all EDCM demand at the node), the £/annum 'usages' of Branches at each voltage level (calculated in Step 4) are summated to create a total £/annum 'usage' for all CDCM dominated nodes. The CDCM demand 'using' each voltage level is determined by summating the nodal demands of all CDCM dominated nodes that have non zero £/annum 'usages' at the particular voltage level. The average £/kW/annum network usage by CDCM dominated nodes is derived for each voltage level by dividing the total £/annum usage (at the voltage level by CDCM dominated nodes) by the total CDCM demand 'using' the voltage level. This provides the denominators used for the network use factors.

30.11 The network use factor, at each voltage level, for each node where EDCM demand is present therefore is the £/kW/annum for the nodal demand at the appropriate voltage level, divided by the corresponding average £/kW/annum for the same voltage level determined for CDCM dominated nodes.

ANNEX 1 - IMPLEMENTATION GUIDE

SCHEDULE 18 - EHV CHARGING METHODOLOGY (LRIC MODEL)

1. SCOPE

1.1 This Annex describes the definitions, input and output data, and the power flow analysis process required to model the DNO Party's Distribution System to enable the LRIC methodology to be implemented as set out in the EDCM.

2. POWER SYSTEMS ANALYSIS

Power Flow Analysis Tools

2.1 The DNO Parties use a variety of software tools to model their respective Distribution Systems for the purposes of operating and planning their Distribution Systems.

2.2 The Authority and the DNO Parties have agreed that it is not appropriate to prescribe which software tool is used for the analysis of the Distribution Systems, as it is for each DNO Party to satisfy itself that it is using the appropriate tools for planning and operation of its Distribution System.

2.3 The DNO Parties routinely analyse their Distribution Systems using power system analysis tools to identify where limitations exist on the network; this information is used to plan reinforcement. The DNO Parties hold current representations of their Distribution Systems within their respective power system analysis tools for this analysis. The aim of using power flow analysis for pricing purposes is to replicate the reinforcement assessment process to determine the costs of future reinforcement of the DNO Party's Distribution System. Analysing the Distribution System at this level of granularity enables the creation of Nodal costs that can be used to convey cost messages at the Nodal level if desirable.

Power Flow Analysis for Incremental Costing

2.4 Planning of a Distribution System (to satisfy the requirements of the Act and the Distribution Licences) using a power system analysis tool requires the development of a network model which represents the actual Distribution System and the application of a set of demand data that represent the demands that the network will be required to deliver whilst satisfying the nationally defined security standard, ER P2/6.

2.5 These following sections describe the definitions, input data, and the power flow analysis process required to model the DNO Party's Distribution System for incremental costing purposes. The calculation of reinforcement cost and the main outputs are discussed at the end of this Annex.

3. DEFINITIONS

3.1 In this Schedule 18, unless the context otherwise requires, the expressions below shall have the meanings set out below.

Active Power	The product of the voltage, current and cosine of the phase angle between them, measured in watts.
Allowed Revenue	The amount of revenue that the DNO Party can earn on its regulated business in accordance the special conditions within the DNO Party's Distribution Licence.
Authorised Network Model	The model that represents the DNO Party's entire EHV network (from the GSP level down to and including the HV busbar at the EHV/HV transformation level), as described in Paragraph 2.7 (a) and section 4 of this Annex 1 - Implementation Guide.
Base Case Analysis	The analysis to determine the utilisation of the Authorised Network Model under Normal Running Arrangements. Note the Base Case Analysis is performed for each demand scenario (the Maximum Demand Scenario and the Minimum Demand Scenario).

Base Case Flows	The power flows in each Branch as determined under Base Case Analysis. Base Case Flowb is the power flow in Branch b. Note a separate set of Base Case Flows is determined for each demand scenario (the Maximum Demand Scenario and the Minimum Demand Scenario).
Branch	A representation of an asset, collection of assets or part of an asset of the DNO Party's EHV network through which Active Power flows as a consequence of supply to or export from a Connectee or busbar on the DNO Party's HV or EHV networks. A Branch must only be connected between two Nodes. A Branch should conform to the following: • there can be more than one Branch between the same two Nodes; • a three winding transformer may be represented by three Branches (one Branch for each of the windings) configured in a star formation; • the Active Power flowing out of one end of a Branch should equal the Active Power flowing into the other end of the Branch less any losses within the Branch; • shunt reactors and capacitors are not Branches; • earthing transformers, resistors and reactors are not Branches; and • a Branch may constitute a collection of assets e.g. a circuit constituting overhead lines and cables. When combining assets into a Branch, there is a need to consider the reinforcement solution for the Branch in the next stages for the incremental costing calculation.
Branch Rating	The branch ratings selected for the Authorised Network Model should be derived by appropriate consideration of the time of day/ season/ general nature of load profile (i.e. continuous, cyclic etc.) represented within the model.
Bulk Supply Point or BSP	A supply point on the DNO Party's Distribution System representing an EHV/EHV transformation level e.g. 132/33kV.
Charging Year	The financial year (12 month period ending on a 3 March) for which charges and credits are being calculated.
Circuit	The part of a Distribution System between two or more circuit breakers, switches and/or fuses inclusive. For the avoidance of doubt a circuit can contain a number of Branches and Nodes. A Circuit may include transformers, reactors, cables and overhead lines. Busbars are not considered as Circuits.
Circuit Branch	A categorisation, used in the derivation of Branch reinforcement costs, for Branches that represent an interconnection (or part of an interconnection) between substations and which operate at a single voltage level.
Connection Node	A Node which is a point of connection to one of the following: • an Entry Point or the Sole Use Assets connecting the Entry Point; or • an Exit Point or the Sole Use Assets connecting the Exit Point; or • the DNO Party's HV network; or • a Distribution System of another DNO Party or IDNO Party.
Contingency Analysis	The analysis to determine the effect on power flow on the Authorised Network Model under N-1 Contingencies. Note that Contingency Analysis is performed for each demand scenario (the Maximum Demand Scenario and the Minimum Demand Scenario).
Diversity Allowance	The extent, expressed as a percentage, to which the sum of the maximum load across all assets in the modelled network level is expected to exceed the simultaneous maximum load for the network level as a whole.
Diversity Factor	A scaling factor calculated as the ratio of the maximum demand observed at a given location on the network and the aggregate of the individual maximum demands observed at multiple locations connected downstream (i.e. further from source) of the given location, taking account of losses. Such factors provide a means of recognising that the maximum demands observed at individual locations (e.g. substations at a given voltage level) on a section of network may not be coincident. Details of the calculation of Diversity Factors are set out in section 5.11 (Diversity Factors) of Annex 1 - Implementation Guide.
EDCM	has the meaning given to that expression in Paragraph 1.
EDCM Connectee	means a Connectee whose Connected Installation is a Designated EHV Property as defined in Standard Conditions 50A.11 and 13B.6 of the DNO Party's Distribution Licence.
EHV	Extra High Voltage.
Electricity Ten Year Statement (ETYS)	This is the statement of that name required to be produced by the Independent System Operator and Planner under the Electricity System Operator Licence in respect of the whole of Great Britain. The statement includes information on demand, generation, plant margins, the characteristics of the existing and planned National Electricity Transmission System, its expected performance and capability now and in the future.
Eligible Bad Debt	means any bad debts with respect to Use of System Charges that the DNO Party can recover in accordance with the DNO Party's Distribution Licence. For the avoidance of doubt, this definition includes the DNO Party's bad debt and bad debt which the DNO Party is recovering on behalf of LDNOs.
Embedded	means connected to a LDNO's Distribution System.
ER P2/6	Energy Network Association's Engineering Recommendation P2/6 which is the planning standard for security of supply to be used by the DNO Parties.
ETR 130	Energy Network Association's Engineering Technical Report 130 which is the Application Guide for assessing the capacity of Distribution Systems to which Generation Installations are connected.
Extra High Voltage or EHV	Refers to voltages operating at 22kV or higher.
Forecast Business Plan Questionnaire or FBPQ	means the questionnaire that the DNO Party is required to submit under the Regulatory Instructions and Guidance issued by the Authority under the DNO Party's Distribution Licence.

Generation Coincidence Factor	A factor which is calculated for each Grid Supply Point (or group of normally interconnected Grid Supply Points) and applied to Network Demand Data (Generation) in the Minimum Demand Scenario, to reflect the coincidence of generation export.
Grid Supply Point or GSP	A point of supply from the National Electricity Transmission System to the DNO Party's Distribution System.
High Voltage or HV	Refers to voltages operating above 1000 volts but lower than 22kV.
Incremented Flow Analysis	The analysis to determine the effects of a demand increment or decrement at a Node on each Branch of the Authorised Network Model under Normal Running Arrangements. Note the Incremented Flow Analysis is performed for each demand scenario (the Maximum Demand Scenario and the Minimum Demand Scenario).
Incremented Flows	The new power flows in each Branch as a consequence of the effect of a specified increment of demand at each Node. A separate set of Incremented Flows is produced for each demand scenario. The specified increment of demand at each Node may be different for each demand scenario. Incremented Flownb is the new power flow in Branch b as a result of a change of demand at Node n.
Iterative Approach	A numerical approach for the calculation of Incremented Flows. The approach is described in section 6.21 (Iterative Approach) of Annex 1 - Implementation Guide.
kV	Kilovolt (1,000 Volts): a unit of voltage.
kVA	Kilo Volt Ampere: a unit of network capacity.
kVAr	Kilo Volt Ampere reactive: a unit of reactive power flow. The network capacity used by a flow of A kW and B kVAr is SQRT(A^2+B^2) kVA.
kVArh	kVA reactive hour: a unit of total reactive power flow over a period of time. Reactive power meters usually register kVArh.
kW	Kilowatt (1,000 Watts): a unit of power flow.
kWh	Kilowatt hour: a unit of energy. Meters usually register kWh.
LDNO	refers to a licensed distribution network operator, meaning an IDNO Party or a DNO Party operating an electricity distribution system outside of its Distribution Services Area.
Long Term Development Statement or LTDS	The Long Term Development Statement as detailed by Licence Condition 25 of the Distribution Licences.
LRIC	Has the meaning given to that expression in Paragraph 2.1.
LV	Nominal voltages of less than 1kV.
Maximum Contingency Flows	The maximum power flows in each Branch as determined under Contingency Analysis. Maximum Contingency Flowb is the maximum power flow in Branch b under all N-1 Contingencies for the demand scenario. Note a separate set of Maximum Contingency Flows is determined for each demand scenario (the Maximum Demand Scenario and the Minimum Demand Scenario).
Maximum Demand Data	The Network Demand Data that is applied to the Maximum Demand Scenario. The construction of Maximum Demand Data is described in section 5.31 (Maximum Demand Data for the Authorised Network Model) of Annex 1 - Implementation Guide.
Maximum Demand Scenario	The analysis scenario of the Authorised Network Model populated with demands that reflect maximum loading conditions.
Minimum Demand Data	The Network Demand Data that is applied to the Minimum Demand Scenario. The construction of Minimum Demand Data is described in section 5.37 (Minimum Demand Data for the Authorised Network Model) of Annex 1 - Implementation Guide.
Minimum Demand Scenario	The analysis scenario of the Authorised Network Model populated with demands that reflect minimum loading conditions.
MVA	Mega Volt Ampere (1,000 kVA): a unit of network capacity.
MW	Megawatt (1,000 kW): a unit of power flow.
MWh	Megawatt hour (1,000 kWh): a unit of energy. Energy trading is usually conducted in MWh.
N-1 Contingency	An N-1 Contingency considers an N-1 Event occurring on the Authorised Network Model and models the consequential network actions and where appropriate constraints on Connectee demands to ensure that the flow on each Branch is within its rated capacity and so is ER P2/6 compliant.
N-1 Event	An N-1 Event is a First Circuit Outage (FCO) as explained in ER P2/6. It signifies a fault or arranged outage on the network which would result in a section of the network defined by the relevant protection scheme to sectionalise and isolate the faulty section, or isolate the section to be worked on for maintenance, resulting in zero power flow in the affected network. N-1 Events should consider an outage of a complete Circuit and only consider faults or arranged outages occurring with the network initially running under Normal Running Arrangements.
National Electricity Transmission System	Has the meaning given to that expression in the CUSC
Negative Load Injection	Negative Load Injection is a negative value of load calculated and applied to a source substation within the network model to represent the effects of diversity between associated downstream demands upon the actual demand observed at the source substation.

Net Diversity Factor	A scaling factor that represents the diversity between the maximum demands observed at substations at different levels of a network, which may be derived by multiplying Diversity Factors representing the diversity between interim levels.
network	This is a reference to the DNO Party's Distribution System, or to a particular part of that Distribution System.
Network Demand Data	This is the load and generation which is used to populate the Authorised Network Model. Network Demand Data is constructed of Network Demand Data (Load) and Network Demand Data (Generation). A description of Network Demand Data is given in section 5 of (Network Demand Data) of Annex 1 - Implementation Guide.
Network Demand Data (Generation)	Generation export applied within the Authorised Network Model at Nodes representing the Entry Point for each EDCM Connectee with an agreed Maximum Export Capacity, factored according to ER P2/6 or coincidence with other generation export, where appropriate.
Network Demand Data (Load)	The load applied within the Authorised Network Model at Nodes representing the Exit Point for each EDCM Connectee and/or the lower voltage busbars at each EHV/HV substation.
network level	The network is modelled as a stack of circuit and transformation levels between supplies at LV and the National Electricity Transmission System. A network level is any circuit or transformation level in that stack. An additional network level is used for transmission exit.
Node	A representation of a point on the DNO Party's EHV network that is a point of connection between a Branch and one or more of the following: • another Branch; or • an Entry Point or the Sole Use Assets connecting the Entry Point; or • an Exit Point or the Sole Use Assets connecting the Exit Point; or • the DNO Party's HV network; or • the Distribution System of another DNO Party or IDNO Party; or • the National Electricity Transmission System, • and “Nodal” shall be construed accordingly.
Non-Final Demand Site	as defined in Schedule 32.
Normal Running Arrangements	The DNO Party's network with no system outages i.e. with no planned outages (e.g. for maintenance) and no unplanned outages (e.g. subsequent to a fault).
Off-Peak Charge	The Nodal marginal charge (£/kVA/annum) calculated for the Minimum Demand Scenario. The calculation of this Nodal marginal charge is discussed in section 8 (Output results) of Annex 1 - Implementation Guide.
Peak Charge	The Nodal marginal charge (£/kVA/annum) calculated for the Maximum Demand Scenario. The calculation of this Nodal marginal charge is discussed in section 8 (Output results) of Annex 1 - Implementation Guide.
Point of Common Coupling	The Point of Common Coupling for a particular single Connectee is the point on the network where the power flow associated with the single Connectee under consideration, may under some (or all) possible arrangements interact with the power flows associated with other Connectees, taking into account all possible credible running arrangements.
Power factor	The ratio of energy transported (kW) to network capacity used (kVA).
Portfolio tariff	A tariff for use of the network by another DNO/IDNO Party where charges are linked to flows out of/into the other DNO/IDNO Party's network from its Connectees or further nested networks.
Reactive Power	The product of the voltage and current and the sine of the phase angle between them, measured in units of voltamperes reactive.
Recovery Factor	A factor which is applied to the Branch incremental costs to limit the level of Branch cost recovery to being no greater than the actual reinforcement cost of the Branch.
Regulatory Year	Has the meaning given to that expression in the DNO Party's Distribution Licence.
RRP	Regulatory reporting pack, a dataset produced each year by each DNO Party for the Authority.
Scaling Factor	A factor which is calculated for each Grid Supply Point (or group of normally interconnected Grid Supply Points) to calculate the Network Demand Data (Load) element of the Minimum Demand Data.
Security Factor	These describe the change in utilisation of Branches between the Maximum Contingency Flows determined by Contingency Analysis and the Base Case Flows determined by Base Case Analysis. Section 6.6 (Security Factor Calculation) of Annex 1 - Implementation Guidedescribes how Security Factors are calculated.
Sensitivity Coefficients Approach	These describe the change in utilisation of Branches between the Maximum Contingency Flows determined by Contingency Analysis and the Base Case Flows determined by Base Case Analysis. Section 6.6 (Security Factor Calculation) of Annex 1 - Implementation Guide1 describes how Security Factors are calculated
Sole Use Assets	Sole Use Assets are assets in which only the consumption or output associated with a single Connectee can directly alter the power flow in the asset, taking into consideration all possible credible running arrangements, i.e. all assets between the Connectee's Entry/Exit Point(s) and the Point(s) of Common Coupling with the general network.
Supplier of Last Resort	a supply licensee to which a Last Resort Supply Direction applies, where Last Resort Supply Direction has the meaning given to that expression in the Supply Licence.
System simultaneous maximum load	The maximum load for the GSP Group as a whole.

Transformer Branch	A categorisation used in the derivation of Branch reinforcement costs, for Branches that represent transformation between different voltage levels.
unit	Where the context permits, the word unit refers to kWh.
unit rate	A charging or payment rate based on units distributed or units generated. Unit rates are expressed in p/kWh. Tariffs applied to multi-rate meters and/or using several time bands for charging have several unit rates.

4. NETWORK MODELLING

4.1 This section 4 describes the input data required to model the DNO Party's Distribution System for pricing purposes.

Authorised Network Model

4.2 This is the network model that represents the DNO Party's entire EHV network, from the GSP level down to and including the HV busbar at the EHV/HV transformation level and includes all authorised (i.e. sanctioned by the DNO Party) reinforcement, replacement, diversion and new connection works that are anticipated to be constructed and operational at the time of Maximum Demand in the year for which the Use of System Charges are being calculated.

4.3 Due to the timings difference between the publication of the LTDS and the creation and publication of Use of System Charges, the Authorised Network Model may contain revised assumptions to the LTDS information. Where a part of a single authorised network project is expected to be commissioned and operational in the year for which Use of System Charges are to be calculated then the DNO Party may, if appropriate, model the fully completed network project.

4.4 The Authorised Network Model may be constructed so that power flow analysis may be conducted separately upon individual Grid Supply Points (or groups of normally interconnected Grid Supply Points) provided that there is no transfer of demand, or interconnection, with adjacent Grid Supply Points considered in the analysis of contingency conditions.

4.5 A representation of the National Electricity Transmission System shall be included in the model. The complexity of the representation will be dependent on the level of interconnection of Grid Supply Points via the DNO Party's EHV network. The representation may be:

a. a simple generator infeed at the Grid Supply Point; or

b. the use of equivalent circuits to model the interconnections of the Grid Supply Points via the National Electricity Transmission System; or

c. a full replication of the National Electricity Transmission System electrically local to the DNO Party's Distribution System; or

d. full replication of the whole of the National Electricity Transmission System.

e. The method of representation should be carefully selected in order to produce a suitable representation of the flows into the DNO Party's EHV network from the National Electricity Transmission System during both Normal Running Arrangements and N-1 Contingency scenarios.

4.6 Where there is a connection between the DNO Party's EHV network and an IDNO Party's EHV network (or another DNO Party's EHV network), these can be represented either by an Exit Point or an Entry Point in a similar manner to that of an EDCM Connectee. In the event that the IDNO Party's (or other DNO Party's) network derives its supply from several different connection points on the DNO Party's Distribution System it

may become necessary to model some or all of the IDNO Party's (or other DNO Party's) network to ensure that the flows at the boundary are representative of those expected under Normal Running Arrangements and Contingency scenarios.

4.7 The Authorised Network Model can be modelled so that it takes into account every different section of a Circuit, including individual underground cables and overhead line sections, with each different type forming a separate Branch in the model connected between two Nodes. However, this approach can lead to known issues associated with the non-convergence to a power flow solution of models with large numbers of Nodes and large numbers of Branches with very small impedances. It is acceptable to model a single Branch to represent a composite of multiple subcomponents of cable and overhead line. The impedance of a composite Branch can be calculated from the types of subcomponent that make up the overall Circuit length. The rating of a composite Branch can be obtained by examining the rating of all the Branch subcomponents and the lowest rating will be used as the limiting section that overloads first. For underground cables the impedance/rating is dependent upon the construction type of the cable, cross sectional area of the conductor, conductor material, whether the cable is laid directly in the ground or in ducts. Similarly, for overhead lines the impedance/rating is dependent upon the construction type of the overhead line structures (to take account of the relative positions of the conductors), the conductor material/type and cross sectional area. This information can then be used to determine the Branch impedance and minimum component rating applied to the Branch in the network model.

4.8 As an example, if Figure 2 below represents the actual network, the approach described above to produce the EHV network model would reduce it to a Nodal model representation as shown in Figure 3 below.

4.9 Table 4.9 shows an example of the data held relating to Figure 2 with the individual subsections being cross referenced to each Branch. Table 4.9A lists the parameters used for the Nodal model shown in Figure 3.

Figure 2 An example of a section of network to be converted into a model

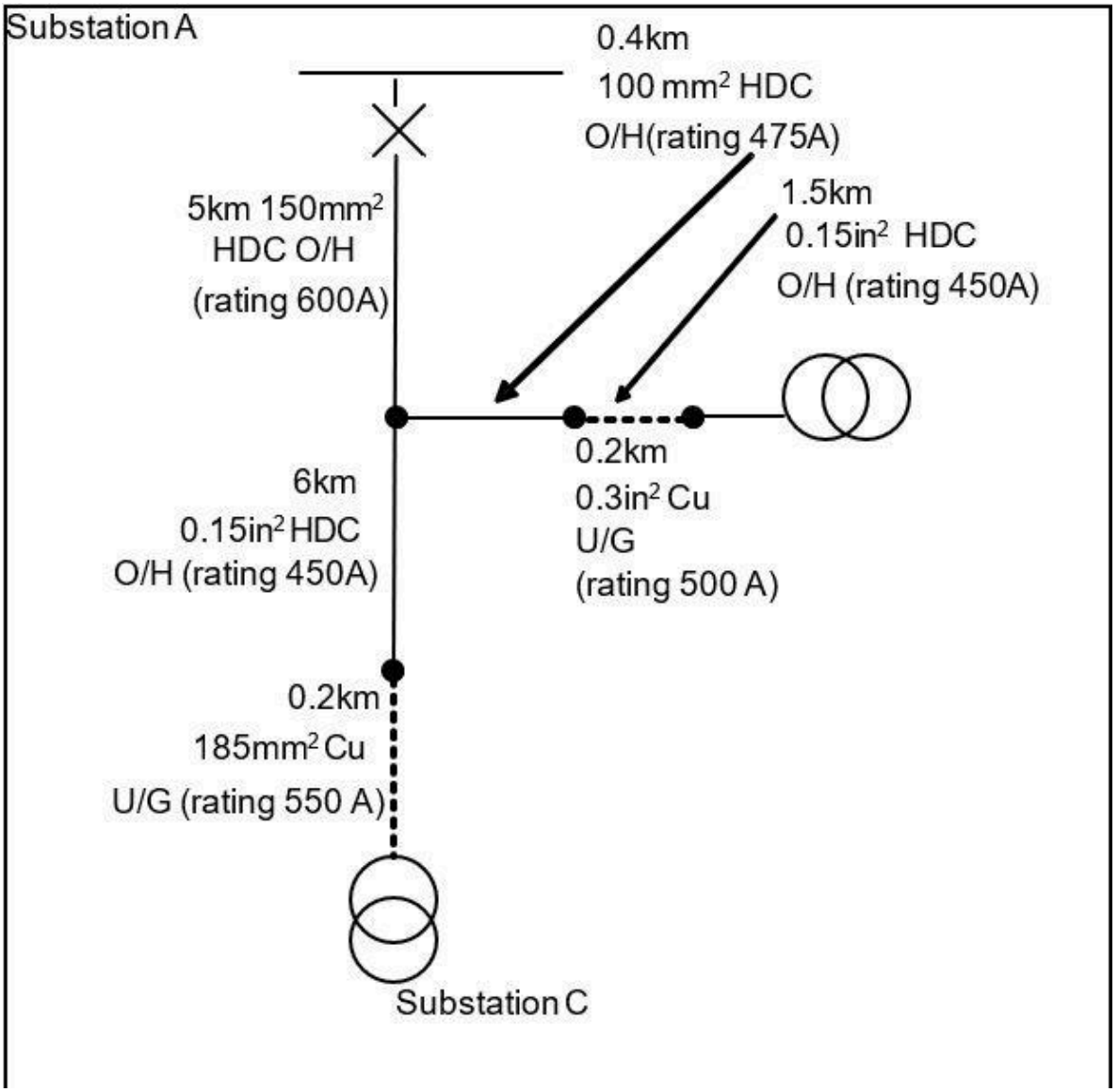

Figure 3 The resultant Nodal model which represents the example network in Figure 2

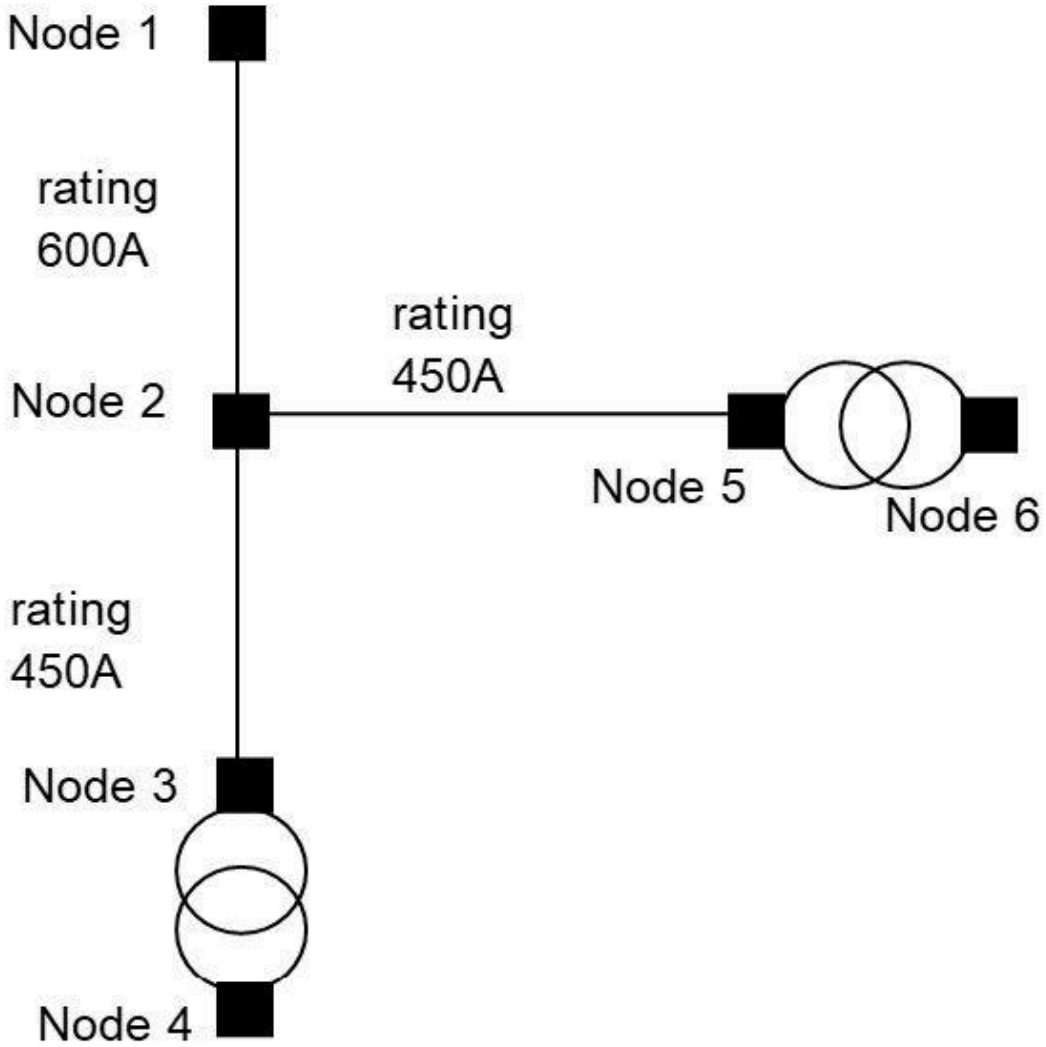

Table 4.9 An example of the information held separately relating to Figure 2 which is used to provide the minimum composite branch rating

Branch	Line Section	Type	Length	Rating	R(p.u.)[a]	X(p.u.)
Node 1 to Node 2	1	150mm^2 HDC O/H	5km	600A	0.001	0.01
Node 2 to Node 3	1	0.15in^2 HDC O/H	6km	450A	0.0018	0.0054
Node 2 to Node 3	2	185mm^2 Cu U/G	0.2km	550A	0.00003	0.0003
Node 2 to Node 5	1	100mm^2 HDC O/H	0.4km	475A	0.00004	0.0004
Node 2 to Node 5	2	0.3in^2 Cu U/G	0.2km	500A	0.00003	0.0001
Node 2 to Node 5	3	0.15in^2 HDC O/H	1.5km	450A	0.00045	0.00135

[a] For the sake of simplicity ratings, resistance and reactance values given above are assumed and may be used only for illustrative purposes such as the given example to calculate equivalent ratings and parameters for a composite Branch.

Table 4.9A Parameters used for the Nodal model shown in Figure 4

Branch	Line Section	Rating	R(p.u.)	X(p.u.)
Node 1 to Node 2	1	600A	0.001	0.01
Node 2 to Node 3	1	450A	0.00183	0.0057
Node 2 to Node 5	3	450A	0.00052	0.00185

5. NETWORK DEMAND DATA

5.1 This section 5 describes the input data required to model the DNO Party's Distribution System for pricing purposes.

Demand Data (Load)

5.2 The load demands in the model will be the estimated demand for the year for which prices are being produced. This estimated demand will be based on actual recorded network data collected by the DNO Party. The following Demand Data is required as the basis of populating the Authorised Network Model:

a. Maximum Demands at each Connection Node;

b. Maximum Demands at Grid Supply Points;

c. Minimum Demands at Grid Supply Points; and

d. Maximum Demands at Bulk Supply Points or other intermediate substations (Only required if Method 1 or Method 3 Diversity calculations are being used).

5.3 The data will be based on the DNO Party's maximum load estimate for each substation as identified in the LTDS and represent the maximum load estimates at Grid Supply Point level as submitted by the DNO Party to the Independent System Operator and Planner for its Electricity Ten Year Statement (ETYS). Due to the timings difference between the publication of the Long Term Development Statement and the creation and publication of Use of System Charges the Demand Data may contain revised assumptions to the Long Term Development Statement. Where new EDCM Connectees and substations are included in the Authorised Network Model, their demands will be individually assessed and estimated by the DNO Party.

5.4 The load estimates in the Long Term Development Statements, are normally cleansed and validated ensuring:

a. the maximum loads that are recorded reflect Normal Running Arrangements;

b. consideration of application of suitable weather correction, if appropriate; and

c. that latent demand is accounted for in accordance with the guidance contained in ETR130.

Demand Data (Generation)

5.5 Generation in the model will be based on the Maximum Export Capacities for EDCM Connectees. For the Minimum Demand Scenario a Generation Coincidence Factor will be applied, where appropriate. An F factor as described in ER P2/6 may be required for the Maximum Demand Scenario. Where sufficient actual recorded network data exists, a generator's site-specific F factor may be calculated, as described in ETR 130.

Modelling of Connectees with both Load and Generation

5.6 'Import/Export' Connectees (Connectees that have the ability to import electricity from, and export electricity to, the Distribution System) require special consideration so that only a single pair of Nodal marginal charges (Charge 1 and Charge 2) are calculated for each Connectee.

5.7 'Import/Export' Connectees are modelled as either a demand Connectee or a generation Connectee throughout both the Maximum Demand and Minimum Demand Scenarios - but not as both types of Connectees. The choice of model is based on whether the Connectee's dominant operating mode is that of

a demand Connectee or a generation Connectee (determined by examination of the Connectee's Maximum Import Capacity and Maximum Export Capacity or kWh consumptions as appropriate). Thus, in both demand scenarios, the Connectee is treated solely as either a load Connectee or a generation Connectee according to their dominant behaviour.

5.8 In contrast, however, it may be noted that if two Connectees are connected to a single Node and one is a generation Connectee, the other a demand Connectee, then two sets of Nodal marginal charges would be produced - one for the demand, the other for the generation. This reflects the fact that the two individual Connectees can operate simultaneously in opposing modes, whereas this is clearly not possible for a single Import/Export Connectee.

5.9 Once the predominant operating mode has been determined for an Import/Export Connectee, the magnitudes of the demands to be applied in each scenario are determined by reference to the to the Network Demand Data (Load) and Demand Data (Generation) sections as appropriate.

5.10 The incremental costs for these Connectees are derived from increments applied with the appropriate power factor for the dominant behaviour of the Connectee (e.g. if the Connectee is considered to behave predominantly as a load Connectee, the power factor of the applied increment would be appropriate for a load i.e. 0.95).

Diversity Factors

5.11 The demands that are required to be populated in the Authorised Network Model need to be set so the modelled demand supplied through a GSP is equal to the Maximum Demand at the GSP as determined in the Network Demand Data (Load) section above. This may be achieved by using Diversity Factors to modify the Connection Node maximum demands or by the use of Negative Load Injections. The following describes acceptable methods to achieve this requirement.

5.12 To aid the description a simple network is shown in Figure 4 below which will provide a basis for the examples:

Figure 4 Example model for the calculation of Diversity Factor

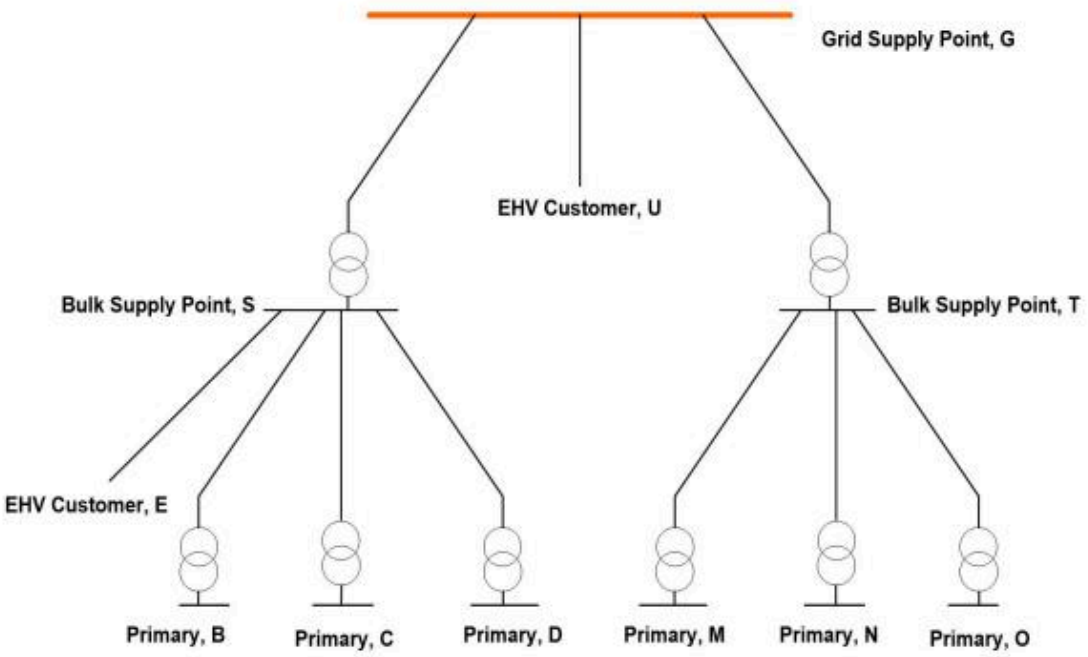

Method 1 - Hierarchical Diversity Factors

5.13 Networks are typically built as a hierarchy. The typical hierarchy levels are primary substation, Bulk Supply Points and Grid Supply Points. There may also be other intermediate levels such as 132kV switching substations. A Diversity Factor can then be calculated for each required substation. The Diversity Factor is calculated as the maximum demand at that substation divided by the sum of the maximum demands of all points of the network at the next lower hierarchy served by that substation plus an allowance for losses in that part of the network.

5.14 In our example, for Bulk Supply Point, S (see Figure 5), supplying three primary substations, B, C and D, and an EDCM Connectee E, Diversity Factor is derived as:

$$\mathrm{DF_S} = \frac{\mathrm{MD_S}}{(\mathrm{MD_B} + \mathrm{MD_C} + \mathrm{MD_D} + \mathrm{MD_E} + \mathrm{losses_{S\rightarrow}})}$$

where

MD_S is the maximum demand at substation S,

MD_B is the Maximum Demand at substation B,

MD_C is the Maximum Demand at substation C,

MD_D is the Maximum Demand at substation D,

MD_E is the Maximum Demand at the EDCM Connectee E substation, while

$Losses_S$ incurs line losses in the downstream network supplied from Bulk Supply Point S as shown in Figure 5.

5.15 Similarly for Grid Supply Point, G, supplying two Bulk Supply Points, S and T, and an EDCM Connectee U, Diversity Factor is derived as:

$$\mathbf{DF_G} = \frac{\mathbf{MD_G}}{(\mathbf{MD_S} + \mathbf{MD_T} + \mathbf{MD_U} + \mathbf{losses_{G\rightarrow}})}$$

5.16 Diversity Factors are calculated separately for each substation at each level. In our example Diversity Factors would be calculated for substations S, T, and G.

5.17 A Net Diversity Factor is then applied to each Connection Node based on the product of Diversity Factors of all the substations that supply that Connection Node. In the example the following Net Diversity Factors would be applied to each of the Connection Nodes.

Table 5.17 - Calculation of Net Diversity Factors - Hierarchical Diversity Factors

Connection Node	Maximum Demand	Net Diversity Factor	Demand to be applied to the Network Model
Primary, B	MD_B	DF_G* DF_S	DF_G* DF_S * MD_B
Primary, C	MD_C	DF_G* DF_S	DF_G* DF_S * MD_C
Primary, D	MD_D	DF_G* DF_S	DF_G* DF_S * MD_D
EDCM Connectee, E	MD_E	DF_G* DF_S	DF_G* DF_S * MD_E
Primary, M	MD_M	DF_G* DF_T	DF_G* DF_T * MD_M
Primary, N	MD_N	DF_G* DF_T	DF_G* DF_T * MD_N
Primary, O	MD_O	DF_G* DF_T	DF_G* DF_T * MD_O
EDCM Connectee, U	MD_U	DF_G	DF_G* MD_U

5.18 Diversity Factors are applied to both the Active Power and Reactive Power demands at each connection point thus ensuring the power factor of the demand remains unchanged.

Method 2 - Single Diversity Factors

5.19 Where a network has significant interconnection or is subject to regular rearrangement (e.g. primary substations being transferred between Bulk Supply Points) the use of a single Diversity Factor for all the demand supplied by a Grid Supply Point (or a set of interconnected Grid Supply Points) may be appropriate. The Diversity Factor for the GSP is calculated as the Maximum Demand at the GSP divided by the sum all the Maximum Demands of each Connection Node supplied from that GSP plus an allowance for losses.

5.20 Using the example shown in Figure 5 a single Diversity Factor for Grid Supply Point, G can be calculated as

$$DF_{G1} = \frac{MD_G}{(MD_B + MD_C + MD_D + MD_E + MD_M + MD_N + MD_O + MD_U + losses)}$$

where Losses are network losses of the network shown in Figure 4.

5.21 The Net Diversity Factor in this method is equal to the calculated single Diversity Factor. In the example the following Net Diversity Factors would be applied to each of the Connection Nodes.

Table 5.21 Calculation of Net Diversity Factors - Single Diversity Factors

Demand point	Maximum Demand	Net Diversity Factor	Demand to be applied to the Network Model
Primary, B	MD_B	DF_{G1}	$DF_{G1} * MD_B$
Primary, C	MD_C	DF_{G1}	$DF_{G1} * MD_C$
Primary, D	MD_D	DF_{G1}	$DF_{G1} * MD_D$
EDCM Connectee, E	MD_E	DF_{G1}	$DF_{G1} * MD_E$
Primary, M	MD_M	DF_{G1}	$DF_{G1} * MD_M$
Primary, N	MD_N	DF_{G1}	$DF_{G1} * MD_N$
Primary, O	MD_O	DF_{G1}	$DF_{G1} * MD_O$
EDCM Connectee, U	MD_U	DF_{G1}	$DF_{G1} * MD_U$

5.22 Diversity Factors are applied to both the Active Power and Reactive Power demands at each connection point thus ensuring the power factor of the demand remains unchanged.

Method 3 - Negative Load Injections

5.23 A Negative Load Injection is a negative value of load calculated and applied to a source substation within the network model to represent the effects of diversity between associated downstream demands upon the actual demand observed at the source substation.

5.24 Negative Load Injections can be used to ensure that when the Maximum Demand is applied to each Connection Node then the modelled flow through the Grid Supply Point matches the Maximum Demand at the Grid Supply Point.

5.25 Negative Load Injections are applied at a substation to ensure that the demand at the substation equals the required Maximum Demand for that substation. Negative Load Injections are normally placed at Bulk Supply Points, other intermediate substations (such as 132kV switching Substation) and Grid Supply Points.

5.26 The amount of Negative Load Injection required to be applied at a substation is calculated as the maximum demand at that substation minus the sum of the maximum demands of all points of the network at the next lower hierarchy served by that substation plus an allowance for losses in that part of the network.

5.27 In our example, for Bulk Supply Point, S, supplying three Primary Substations, B, C and D, and an EDCM Connectee E, Negative Load Injection is derived as:

$$NLI_S = MD_S - (MD_B + MD_C + MD_D + MD_E + losses_{S\rightarrow})$$

5.28 Similarly for Grid Supply Point, G, supplying two Bulk Supply Points, S and T, and an EDCM Connectee U, Negative Load Injection is derived as

$$NLI_G = MD_G - (MD_S + MD_T + MD_U + losses_{G\rightarrow})$$

5.29 Note that the value of Negative Load Injection calculated is a negative number. This is modelled as a negative load (or generation) at the substation busbar so that the incoming flow matches the required maximum demand for that substation.

5.30 Negative Load Injections are applied as an Active Power injection only. No Reactive Power injection is applied.

Maximum Demand Data for the Authorised Network Model

Network Demand Data (Generation)

5.31 The Network Demand Data (Generation) element of the Maximum Demand Data will be constructed with generation output set at zero unless the generation can be considered to have a contribution to security of supply under ER P2/6, in which case the ER P2/6 level of export will be modelled.

5.32 The contribution of distributed generation to security of supply is dealt with in ER P2/6 through the application of F factors. Each Generation Installation is assigned an F factor and this represents the percentage of the generator's declared net capacity that can be considered when assessing network security. ER P2/6 also uses the term 'Persistence' to reduce the F factor for intermittent generation, as the time period (in hours) for which its contribution to security is being assessed increases. Table 2-4 of ER P2/6 recommends values of 'Persistence'; these values are dependent on the demand class being assessed. The value of 'Persistence' to be used for intermittent generation will be as stated in Table 2-4 of ER P2/6 for 'Other outage', using the maximum GSP (or GSP groups') demand instead of the demand class of the demand group.

Network Demand Data (Load)

5.33 The Network Demand Data (Load) element of the Maximum Demand Data will be constructed based on the Maximum Demands for each load point and either amended (Diversity Factors) or enhanced (Negative Load Injections) by the chosen diversity method (see section 5.11 (Diversity Factors) above).

5.34 The Diversity method is applied to the maximum demand load estimates for each load point to scale the modelled load in the Maximum Demand Data so that it reflects the Grid Supply Point maximum load estimates under Normal Running Arrangement.

5.35 The application of diversity in the derivation of this data needs to be carefully considered and aim to produce, where possible, within the constraints of a single set of Network Demand Data, power flows that reflect typical flows under the Maximum Demand Scenario condition but also enable calculations to be undertaken upon an Authorised Network Model.

5.36 In considering the derivation of the Maximum Demand Data, it must be recognised that power flow analysis based on this Network Demand Data may not replicate the maximum power flow through individual assets that could be seen under all N-1 Contingency conditions, due to the limitations of analysis based upon a single set of Network Demand Data.

Minimum Demand Data for the Authorised Network Model

Network Demand Data (Generation)

5.37 The Network Demand Data (Generation) element of the Minimum Demand Data will be derived by application of a Generation Coincidence Factor to the Maximum Export Capacity of an Entry Point. There will be no adjustment for F factors.

5.38 Generation Coincidence Factors should be separately determined for each Grid Supply Point (or group of normally interconnected Grid Supply Points) using historic data. The Generation Coincidence Factor for each Grid Supply Point (or group of normally interconnected Grid Supply Points) will be applied to all

generators, within the Authorised Network Model, that are supplied from the relevant Grid Supply Point (or group of normally interconnected Grid Supply Points).

5.39 The Generation Coincidence Factor for a Grid Supply Point (or group of Grid Supply Points) is equal to the maximum simultaneous MW generation output for all the EDCM (Generation) Connectees, within the Authorised Network Model, supplied from the Grid Supply Point (or group of Grid Supply Points), where suitable half hourly MW data is available, divided by the summated total of the Maximum Export Capacities of these generators.

5.40 Where Generation Coincidence Factors greater than 1 are determined for a Grid Supply Point (or group of normally interconnected Grid Supply Points), a Generation Coincidence Factor of 1 will be applied to all Generation Installations supplied from the relevant Grid Supply Point (or group of Grid Supply Points).

Network Demand Data (Load)

5.41 The Network Demand Data (Load) element of the Minimum Demand Data will be derived by application of a Scaling Factor to the Network Demand Data (Load) element of the Maximum Demand Data. Such Scaling Factors should be separately determined for each Grid Supply Point (or group of normally interconnected Grid Supply Points) using historic data. The Scaling Factors for each Grid Supply Point (or group of normally interconnected Grid Supply Points) will be applied to all loads taken from Exit Points supplied from the relevant Grid Supply Point (or group of normally interconnected Grid Supply Points).

5.42 The Scaling Factor for each Grid Supply Point (or group of normally interconnected Grid Supply Points) is calculated as:

$$Scaling\ Factor_G = \frac{Minimum\ GSP\ Demand_G}{Maximum\ GSP\ Demand_G}$$

Where:

$ScalingFactor_G$ is the Scaling Factor for Grid Supply Point (or group of normally interconnected Grid Supply Points) G.

$MaximumGSPDemand_G$ is the maximum demand at the Grid Supply Point (or group of normally interconnected Grid Supply Points) G as submitted by the DNO Party for inclusion in the Independent System Operator and Planner's Electricity Ten Year Statement (ETYS).

$MinimumGSPDemand_G$ is the minimum demand at the Grid Supply Point (or group of normally interconnected Grid Supply Points) G validated and cleansed with the same criteria as that used for the $MaximumGSPDemand_G$.

6. POWER FLOW ANALYSIS PROCESS

6.1 This section 6 describes the power flow analysis undertaken for pricing purposes. The purpose of the load flow analysis is to determine the utilisation of the network under Normal Running Arrangement (Base Case Analysis) and N-1 Contingency condition (Contingency Analysis). Furthermore, this analysis assesses the effect of the change in the utilisation of the network caused by a change in demand (load and/or generation) at each Node. The Power Flow Analysis constitutes four main processes namely:

a. Base Case Analysis;

b. Contingency Analysis;

c. Security Factor calculation; and

d. Incremented Flow analysis.

6.2 The processes are performed separately for the two different demand scenarios. The main difference between the two scenarios is the Network Demand Data that is used, although the Branch Rating may also be different. One demand scenario uses Maximum Demand Data and the other uses Minimum Demand Data with appropriate Branch Rating data. These processes and their main inputs and outputs are shown diagrammatically in Figure 5.

Figure 5 Flowchart of the LRIC pricing model

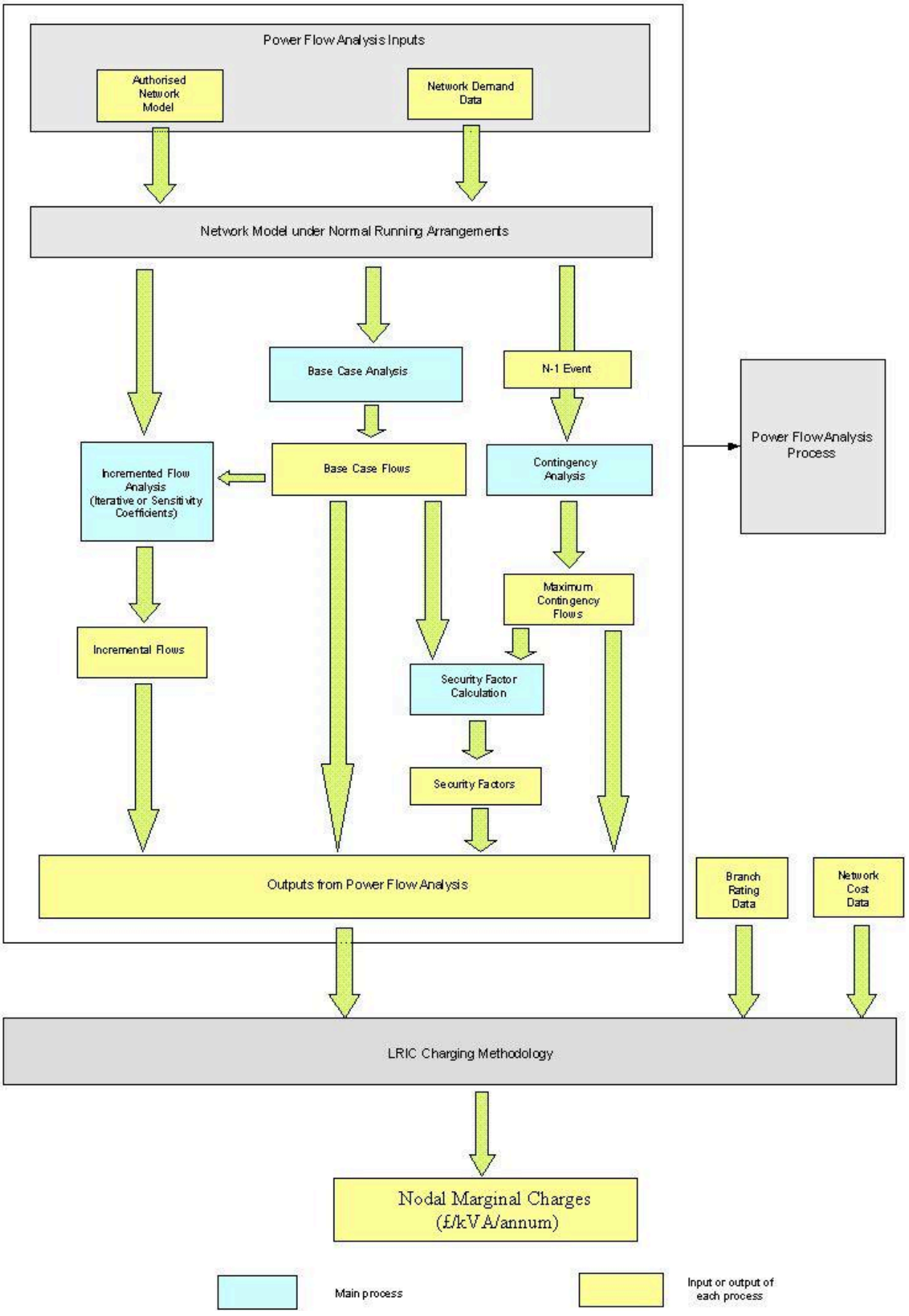

Base Case Analysis

6.3 The Base Case Analysis is required to determine the utilisation of the network under Normal Running Arrangements. The main inputs to the Base Case Analysis are the Authorised Network Model and Network Demand Data. The output of the Base Case Analysis is the Base Case Flow in each Branch of the Authorised Network Model. The steps in this Base Case Analysis are:

a. Step 1 - the Authorised Network Model is populated with the relevant Network Demand Data for the scenario (i.e. Maximum Demand Data or Minimum Demand Data); and

b. Step 2 - the Authorised Network Model is analysed under Normal Running Arrangements to determine the power flows across each of the network Branches and the results are referred to as Base Case Flows.

Contingency Analysis

6.4 Contingency Analysis is required to determine the utilisation of the network where the network assets provide security of supply under N-1 Contingencies, as defined by ER P2/6. This analysis evaluates the change in utilisation of network assets from Base Case Analysis.

6.5 The main inputs to the Contingency Analysis are the Authorised Network Model, the Network Demand Data and the N-1 Contingencies. Each N-1 Contingency will include the N-1 Event and the consequential network actions required to meet the security of supply requirements of ER P2/6. For example, where appropriate, it may include constraints in distributed generation output, automatic switching schemes, manual switching and customer demand reductions. The output of the Contingency Analysis is the Maximum Contingency Flow in each Branch of the Authorised Network Model. The steps in this Contingency analysis are:

a. Step 1 - the Authorised Network Model is populated with the relevant Network Demand Data for the scenario (i.e. Maximum Demand Data or Minimum Demand Data);

b. Step 2 - each N-1 Contingency is applied to the populated Authorised Network Model in turn and the resultant network is analysed to determine the power flows across each of the network Branches and the results are referred to as Contingency Flows; and

c. Step 3 - when Step 2 has been completed for all N-1 Contingencies in both network demand scenarios the maximum flow in each Branch across all the N-1 Contingency analyses is determined and the results are referred to as Maximum Contingency Flows.

Security Factor Calculation

6.6 Security Factors represent the change in utilisation of a Branch between Normal Running Arrangements and worst case N-1 Contingency conditions.

6.7 The main inputs to the Security Factor Calculation are the Base Case Flows and the Maximum Contingency Flows. The output of the Security Factor Calculation is a Security Factor for each Branch of the Authorised Network Model for each scenario (the Maximum Demand Scenario and the Minimum Demand Scenario).

6.8 A Security Factor for each Branch under each scenario (the Maximum Demand Scenario and the Minimum Demand Scenario) is calculated as:

$$Security\ Factor_b = \frac{Maximum\ Contingency\ Flow_b}{Base\ Case\ Flow_b}$$

Where:

$SecurityFactor_b$ is the Security Factor for Branch b.

$MaximumContingencyFlow_b$ is the Maximum Contingency Flow for Branch b as determined by Contingency Analysis.

$BaseCaseFlow_b$ is the Base Case Flow for Branch b as determined by Base Case Analysis.

6.9 Where $MaximumContingencyFlow_b$ is less than $BaseCaseFlow_b$ then a Security Factor of 1 will be used for Branch b, reflecting that the highest utilisation occurs under Normal Running Arrangements.

Incremented Flow Analysis

6.10 The Incremented Flow analysis seeks to determine the change in power flows in the Authorised Network Model arising from the addition of a 0.1MW demand increment at a given Node. This analysis is repeated for each Node where incremental costs are required in the Authorised Network Model and for each network demand scenario. The demand increments are applied to the Authorised Network Model populated with the relevant Network Demand Data.

6.11 The power factor and direction of the demand increments applied to the Authorised Network Model depend upon the network demand scenario considered and also the type of demand that is located at the Node where the increments are applied. This is summarised in the following table:

Table 6.11 Application of increments

	Increment Applied			
	Maximum Demand Scenario		**Minimum Demand Scenario**	
Type of Demand at Node Being Incremented	Power Factor	Direction	Power Factor	Direction
Demand (Load)	0.95	Load	0.95	Generation
Generation	Unity	Load	Unity	Generation

6.12 Increments applied at Nodes where demand (load) is located should be applied at 0.95 power factor under both the Maximum Demand Scenario and the Minimum Demand Scenario. In the Maximum Demand Scenario this increment should be applied in the direction of demand (load). In the Minimum Demand Scenario this increment should be applied in the direction of generation.

6.13 Increments applied at Nodes where generation is located should be applied at unity power factor under both scenarios. In the Maximum Demand Scenario this increment should be applied in the direction of demand (load). In the Minimum Demand Scenario this increment should be applied in the direction of generation.

6.14 Where both demand (load) and generation are located at a given Node, Incremented Flow analysis will be required to be performed once with increments at 0.95 power factor at the Node and then again with separate application of increments at unity power factor at the Node.

6.15 The Incremented Flow analysis does not consider N-1 Contingencies. Security Factors derived from the Base Case Analysis and Contingency Analysis are used to determine the effect of N-1 Contingencies.

6.16 For each Node where increments are applied the difference between Incremented Flows and Base Case Flow need to be determined for each Branch. If the difference is greater than both 1kVA and 0.01% of the Branch Base Case Flow the Branch is further considered for the calculation of Nodal incremental costs.

Power flow convergence criterion should be carefully selected to ensure that the power flow Nodal mismatches are smaller than the 1 kVA threshold.

6.17 The process is undertaken in Incremented Flow analysis for both the Maximum Demand Scenario and the Minimum Demand Scenario in turn. This is described below:

a. Step 1 - the Base Case Analysis is performed initially (see the Base Case Analysis section). The results of this analysis are Base Case Flows;

b. Step 2 - the power flows across each of the network Branches are determined for the condition where the relevant increment (see Table 6.11) is applied to a Node. The results are referred to as Incremented Flows;

c. Step 3 - the differences between the Incremented Flows and the Base Case Flows are evaluated. For those Branches where the difference is smaller than either 1kVA or 0.01% of the Base Case Flow then the Incremented Flow for that Branch is set to the Base Case Flow for that Branch; and

d. Step 4 - steps 2 and 3 are repeated for each Node in turn until they have been completed for each Node in the Authorised Network Model.

6.18 The results of Incremented Flow analysis are collated with the other outputs of the power flow analysis (see Figure 5).

Calculation of Incremented Flows

6.19 Incremented Flows may be calculated either by:

a. application of the relevant increment to a Node in the Authorised Network Model and using load flow solution techniques to determine the power flow through each Branch (the Iterative Approach); or

b. calculation of the power flow through each Branch, associated with the relevant increment to a Node, using sensitivity coefficients derived from the Base Case Analysis (the Sensitivity Coefficients Approach).

6.20 The method of calculation of the Incremented Flows should be selected such that the calculated Incremented Flows are a sufficiently accurate representation of the power flows arising from the addition of a 0.1MW demand increment at a Node. The method of calculation can be considered acceptable, where it is expected to produce Nodal incremental costs, derived from the Incremented Flows, that would vary by no greater than 5% from those that would be determined by use of the power flows arising from the addition of the demand increment.

Iterative Approach

6.21 The Iterative Approach determines the Incremented Flows required for the Incremented Flow analysis by applying the relevant single increment to each Node in turn to the Base Case and calculating the resultant Branch power flows using AC load flow solution techniques.

6.22 Prior to the application of the increment all the transformer tap positions, distributed generation outputs and switched shunt values are fixed to the values determined under Base Case Analysis to prevent change in their values when analysing the power flows with the increment applied.

Sensitivity Coefficients Approach

6.23 Sensitivity coefficients are a means of describing how the flow in a Branch of a network is affected by a small change of demand at a Node. There are two sensitivity coefficients for each Node-Branch combination

namely:

6.23.1 Branch *ij* MVA power flow change with respect to a change of Active Power at the Node n, δP_{ij} / δP_n; and

6.23.2 Branch *ij* MVA power flow change with respect to a change of Reactive Power at the Node n, δP_{ij} / δP_n.

6.24 Every Branch in the Authorised Network Model has a pair of coefficients (for real and reactive increments) for each Node on the network. Therefore, for a network with N Nodes and B Branches, there will be not more than N*B sensitivity coefficients for real Nodal power increments and not more than N*B sensitivity coefficients for reactive Nodal power increments.

6.25 This approach uses the standard output from the power flow analysis, i.e. for each Node n the following values: Pn P_i - active power injection at Node *i*, Q_i - n reactive power injection at Node n, V_i - voltage magnitude at Node i and θn - θ_i - voltage angle at Node *i*. Then, for each Branch *ij* (between Node *i* and Node *j*) a set of sensitivity coefficients will be calculated using the set of equations here presented in matrix format (see matrix equation below):

$$A.x = b \text{ ; and therefore}$$

$$x = A^{-1}.b$$

where x represents a vector of unknown sensitivity coefficients. A is the Jacobian Matrix which represent the first derivatives of active and reactive Nodal injections with respect to voltage angles and voltage magnitudes, respectively and b is the vector that shows the first derivatives of Branch power flow (MVA) with respect to Node voltage angles and magnitudes, respectively. It should be pointed that values of all derivatives in matrix A and vector b are calculated from the power flow solution obtained from Base Case Analysis. Sensitivity coefficients are calculated from the following equations:

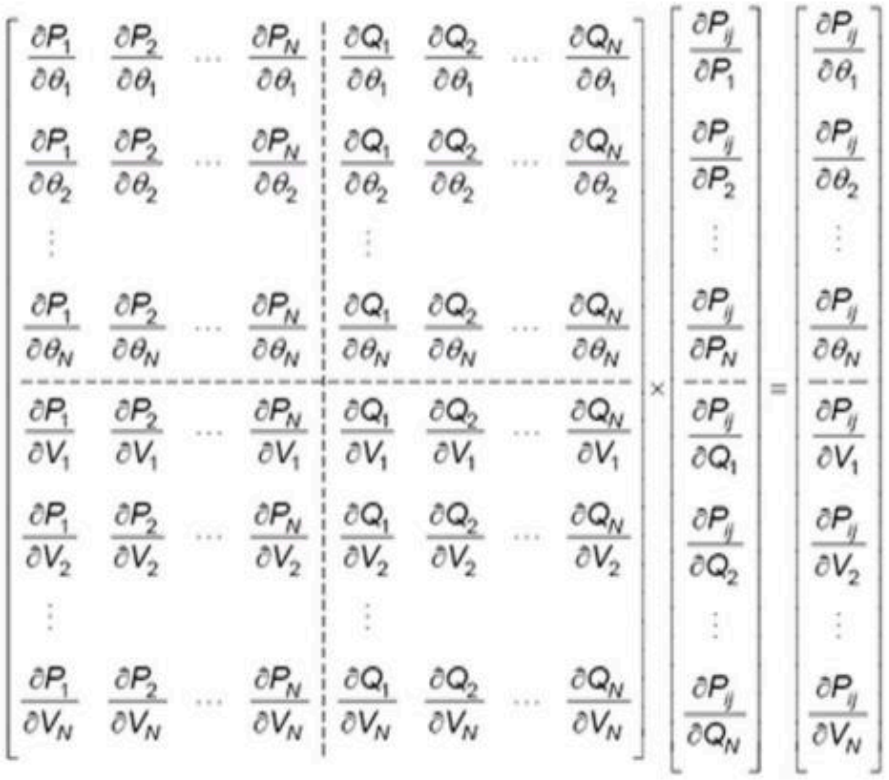

6.26 where:

i,j are the sending and receiving ends of Branch ij;

N is the total number of Nodes;

$$\frac{\partial P_N}{\partial V_N} \frac{\partial Q_N}{\partial V_N}$$

are the first derivatives of Active Power and Reactive Power injections at Node N with respect to a voltage magnitude change at Node N, respectively;

$$\frac{\partial P_N}{\partial \theta_N} \frac{\partial Q_N}{\partial \theta_N}$$

are the first derivatives of Active Power and Reactive Power injections at Node N with respect to a change of voltage angle at Node N, respectively;

$$\frac{\partial P_{ij}}{\partial P_N} \frac{\partial P_{ij}}{\partial Q_N}$$

are the sensitivity coefficients of Branch ij MVA power flow with respect to Active Power and Reactive Power injection at Node N, respectively; and

$$\frac{\partial P_{ij}}{\partial \theta_N} \frac{\partial P_{ij}}{\partial V_N}$$

are the first derivatives of Branch MVA power flow with respect to voltage angle and magnitude at Node N, respectively.

6.27 All elements of matrix A and vector b can be calculated from the power flow analysis outputs and the electrical parameters of the Authorised Network Model. The system of equations presented above is of a generic nature. It should be noted that, in its practical application:

a. Slack Node - is used to balance the Distribution System (network) Active Power and Reactive Power. The corresponding rows related to Active Power and Reactive Power for this particular Node are omitted from the Jacobian matrix and consequently the corresponding sensitivities $\delta P_{ij} / \delta P_n$, $\delta P_{ij} / \delta Q_n$ are set to zero for this Node; and

b. PV Nodes - are used to maintain target voltages. This means that the voltage magnitude changes are omitted from the power flow state vector for such Nodes. The corresponding rows for Reactive Power are therefore omitted from the Jacobian matrix and consequently the corresponding sensitivities $\delta P_{ij} / \delta Q_n$ are set to zero for such Nodes.

6.28 For the calculation of Incremented Flows, sensitivity coefficients (vector x) are calculated from the power flow solution determined in the Base Case Analysis. Once calculated, the sensitivity coefficients are used to calculate the new power flow in a Branch by multiplying the coefficient by the Nodal increment or decrement to evaluate the change in power flows and adding this to the Base Case Flow of the Branch. The results are referred as Incremented Flows.

6.29 For an increment of 0.1 MW at 0.95 power factor (i.e. 0.1 MW and 0.0329 MVAr):

$$Incremented\ Flow_{n,ij} = Base\ Case\ Flow_{ij} + 0.1 * \frac{\partial\ P_{ij}}{\partial\ P_n} + 0.0329 * \frac{\partial\ P_{ij}}{\partial\ Q_n}$$

where, $IncrementedFlow_{n,ij}$ is the new MVA power flow in Branch *ij* as a result of a change of demand at Node *n*, $BaseCaseFlow_{ij}$ is the MVA power flow in Branch *ij* as determined in the Base Case Analysis, $\delta P_{ij} / \delta P_n$ is the Active Power sensitivity coefficient for a Node n and Branch *ij* combination; and $\delta P_{ij} / \delta Q_n$ is the Reactive Power sensitivity coefficient for a Node *n* and Branch *ij* combination.

Outputs from Power Flow Analysis

6.30 To illustrate the outputs from the power flow analysis the example network is shown in Figure 6 and the power flow analysis results (from the application of 0.1MW increments, in the direction of demand (load), to Nodes in the Maximum Demand Scenario) is shown in Table 6.32.

Figure 6 Example network

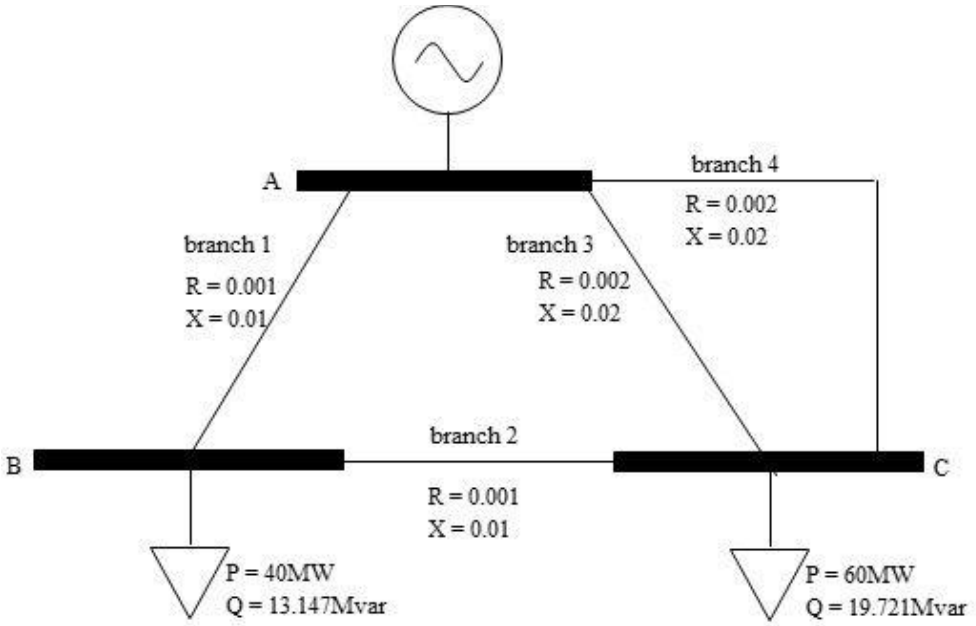

6.31 Table 6.32 shows the Base Case Flow, Contingency Flow, Incremented Flow, the power factor of the applied demand increment and the Security Factor for each Branch per Node for Maximum Demand Scenarios.

6.32 Similar tables would need to be created for the following scenarios/increments:

a. Minimum Demand Scenario - applying 0.1 MW at 0.95 power factor in generation direction at each Node where demand is located;

b. Maximum Demand Scenario - applying 0.1 MW at unity power factor in demand direction at each Node where generation is located; and

c. Minimum Demand Scenario - applying 0.1 MW at unity power factor in generation direction at each Node where generation is located.

Table 6.32 An example set of output results from Maximum Demand Scenario

Node where increments are applied	Power Factor Of Demand Increment	Branch	Base Case Flow (MVA)	Maximum Contingency Flow(MVA)	Security Factor	Incremented Flow(MVA)
			A	B	=B/A	
B	0.95	Branch 1	49.228	63.356	1.287	49.299
		Branch 2	7.024	42.179	6.005	6.989
		Branch 3	28.133	52.890	1.880	28.151
		Branch 4	28.133	52.890	1.880	28.151
C	0.95	Branch 1	49.228	63.356	1.287	49.263
		Branch 2	7.024	42.179	6.005	7.059
		Branch 3	28.133	52.890	1.880	28.168

		Branch 4	28.133	52.890	1.880	28.168

6.33 It should be noted that, where both demand (load) and generation are located at a given Node, two sets of results will be produced at the Node for each scenario (one set for application of increments at 0.95 power factor and another for increments applied at unity power factor).

6.34 For each Node where demand is incremented any Branch showing a power flow change greater than both 1kVA and 0.01% of the Branch Base Case Flow is listed in Table 6.32 above, which also shows the Base Case Flow, Security Factor and Incremented Flow. The filtering of the flows against the above criteria may be carried out at this stage of the power flow analysis or alternatively included in the cost modelling element of the process for pricing. It should be noted that for each Node-Branch combination the Base Case Flows, Security Factors, Incremented Flows and Branch Ratings may be different.

7. CALCULATION OF NODAL INCREMENTAL COSTS

7.1 The calculation of Nodal incremental costs is based on the outputs obtained from the power flow analysis process (see Figure 5 in section 6, Power flow analysis process).

7.2 Using the results of the power flow analysis, Branch Rating data and reinforcement costs, the Nodal marginal charges can be calculated based on the procedure discussed in section 8 (Output results) below.

7.3 The main principles for the calculation of reinforcement costs are given in section (Reinforcement Cost Calculation Principles) below, while the Branch Rating data is discussed in section 7.5 (Branch Rating Data) below.

Reinforcement Cost Calculation Principles

7.4 These are general principles for the calculation of the reinforcement costs:

a. each Branch within the Authorised Network Model should be considered as being one of three types:

i. Transformer Branches - which represent Branches at substations that provide transformation between different voltage levels;

ii. Circuit Branches - which represent an interconnection (or part of an interconnection) between substations and which operate at a single voltage level; or

iii. Zero-cost Branches - these Branches exist in the network model but have zero reinforcement costs;

b. Zero-cost Branches will include, but not be limited to:

i. Branches that represent assets that are not part of the DNO Party's Distribution System for which incremental costs are being calculated (e.g. sections of the National Electricity Transmission System, adjacent Distribution Systems etc.);

ii. Branches that represent Sole Use Assets; and

iii. Branches that represent internal connections within substations, other than installed transformation (e.g. bus couplers, bus section circuit breakers etc.);

a cost of reinforcement will be allocated to each Transformer Branch and Circuit Branch taking account where possible of:

c. the voltage of operation of the Circuit (or in the case of Transformer Branches, the voltages of transformation);

   i. the existing mix of overhead line and underground cable within Circuit Branches; and

   ii. the requirements and costs of similar historic reinforcement projects.

   iii. the cost of reinforcement for a Branch will be constructed from typical unit costs appropriate to the categorisation of the Branch and the components represented.

d. the costs associated with substation plant and equipment (such as circuit breakers, switches, protection equipment, earthing devices etc.) will be included within the cost of reinforcement and allocated appropriately across the Transformer Branches and Circuit Branches to which they relate; and the typical unit costs used to derive the cost of reinforcement for a Branch will:

   i. reflect the modern equivalent asset value of reinforcing the particular asset;

   ii. include overheads directly related to the construction activity; and

   iii. include building and civil engineering works, in unmade ground.

Branch Rating Data

7.5 Each Branch in the Authorised Network Model needs to be assigned a Branch Rating appropriate to each analysis scenario considered. Where a Branch represents a number of components (for instance, a number of sections of overhead line and/or underground cable) then the rating of that Branch is calculated by looking at the ratings of all the subcomponents and determining the lowest value. The rating of a transformer will be the capability of the transformer to supply load at its secondary terminals.

8. OUTPUT RESULTS

Basis of calculation of Peak and Off-Peak Nodal marginal charges

8.1 The outputs of the power flow analysis discussed in section 6 (Power flow analysis process) above, and the Branch Ratings and the reinforcement costs discussed in section 7 (Calculation of Nodal incremental costs) are further used to calculate Nodal marginal charges. The main outputs of this process (shown as the LRIC Charging Methodology block in Figure 5) are Nodal marginal charges in £/kVA/annum for Maximum Demand (Peak Charge) and Minimum Demand Scenario (Off-Peak Charge).

8.2 These are the main characteristics of the calculation of Nodal marginal Peak and Off-Peak Charges:

a. For each Node where either demand or generation is located, Peak and Off-Peak Charges (a single pair of charges for the Node) are calculated using data from the analysis of the Maximum Demand Scenario and Minimum Demand Scenario, respectively. If both generation and demand are located at the same Node a pair of Peak/Off-Peak Charges is produced for each of them (a double pair of charges for the Node).

b. The first step in the calculation of Peak and Off-Peak Charges is the calculation of Branch incremental costs (ΔC_i) for each of two demand scenarios (ΔC_i^{peak} *and* $\Delta C_i^{offpeak}$) and for each applied increment. The formulae that should be used to calculate Branch incremental costs (ΔC_i) are given in Attachment 1 below.

c. Branch incremental costs (ΔC_i) could be either positive or negative. For example, if the applied increment at a Node causes larger incremented flows (MVA) than the Base Case Flow (IncPowerFlow(MVA)>BasePowerFlow(MVA) see Attachment 1 - Calculation of Branch Incremental Cost, below), YearsToReinforcement(inc) would be smaller than YearsToReinforcement(base) and consequently ΔC_i would be a positive value. The calculation of these times to reinforcement is described on a simple network example in Attachment 2 - Calculation of Peak and Off-Peak Charges - A simple example, below.

d. Reinforcement of a Branch can be driven by either the Maximum Demand or the Minimum Demand Scenario. The period that is deemed to drive reinforcement, for each individual Branch, identified by application of increments at a given Node, is the period with the highest absolute value of associated Branch incremental cost. To decide which scenario drives the Branch reinforcement, in each case, the corresponding absolute values of the Branch incremental costs should be compared.

Sense Checking Of Branch Incremental Costs

8.3 The overall recovery of charges (PositiveCostRecovery) for each Branch is individually examined and checked against the actual reinforcement cost for the Branch (ActualReinforcementCost) in order to assess whether the charge recovery for the Branch is excessive. Where excessive charge recovery in a Branch is identified a Positive Recovery Factor is applied to limit the recovery of charges in the Branch to the actual reinforcement cost.

8.4 The overall recovery of credits (*NegativeCostRecovery*) for each Branch is individually examined and checked against the actual reinforcement cost for the Branch (*ActualReinforcementCost*) in order to assess whether the recovery of credits for the Branch is excessive. Where excessive credit recovery in a Branch is identified a Negative Recovery Factor is applied to limit the total recovered credits to the actual reinforcement cost. The cost recovery in a particular Branch, associated with application of an increment at a Node where demand (load) is located, is:

a. the product of the Branch incremental cost, divided by the load increment, and the modelled load at the Node used in the Network Demand Data (Load) that represents the Maximum Demand Scenario - where the period that drives reinforcement is the Maximum Demand Scenario; or

b. the product of the negative of the Branch incremental cost, divided by the load increment, and the modelled load at the Node used in the Network Demand Data (Load) that represents the Minimum Demand Scenario - where the period that drives reinforcement is the Minimum Demand Scenario.

8.5 The cost recovery in a particular Branch, associated with application of an increment at a Node where generation is located, is:

a. the product of the negative of the Branch incremental cost, divided by the generation increment, and the modelled generation output at the Node used in the Network Demand Data (Generation) that represents the Maximum Demand Scenario - where the period that drives reinforcement is the Maximum Demand Scenario; or

b. the product of the Branch incremental cost, divided by the generation increment, and the modelled generation output at the Node used in the Network Demand Data (Generation) that represents the Minimum Demand Scenario - where the period that drives reinforcement is the Minimum Demand Scenario.

8.6 The positive cost recovery for a Branch is the summation of the cost recovery for the particular Branch across all Nodes where the Node's contribution is positive. This is expressed mathematically below:-

$$PositiveCostRecovery_i =$$

$$|((\sum_{k,\Delta C_i^k<0}(-\Delta C_i^k)\cdot G_k^{peak}+\sum_{l,\Delta C_i^l>0}(\Delta C_i^l)\cdot G_l^{off-peak})/100)+$$

$$((\sum_{m,\Delta C_i^m>0}(\Delta C_i^m)\cdot L_m^{peak}+\sum_{n,\Delta C_i^n<0}(-\Delta C_i^n)\cdot L_n^{off-peak})/105.26)|$$

Where:

PositiveCostRecovery$_i$ is the annual recovered 'positive' costs (i.e. charge) for Branch *i*,

k denotes Nodes where generation is located that produce Branch incremental costs for Branch*i*, where the period that drives reinforcement is the period represented by the Maximum Demand Scenario,

ΔC_i^k is the Branch incremental cost (£/annum) for Branch *i*, for generation Node “k” in the period represented by the Maximum Demand Scenario,

G_k^{peak} is the generator output (kVA) at Node “k” in the Network Demand Data (Generation) representing the Maximum Demand Scenario,

I denotes Nodes where generation is located that produce Branch incremental costs for Branch *i*, where the period that drives reinforcement is the period represented by the Minimum Demand Scenario,

$\Delta C^l{}_i$ is the Branch incremental cost (£/annum) for Branch *i*, for generation Node “l” in the period represented by the Minimum Demand Scenario,

$G_l^{off\text{-}peak}$ is the generator output (kVA) at Node “l” in the Network Demand Data (Generation) representing the Minimum Demand Scenario,

m denotes Nodes where demand (load) is located that produce Branch incremental costs for Branch *i*, where the period that drives reinforcement is the period represented by the Maximum Demand Scenario,

ΔC_i^m is the Branch incremental cost (£/annum) for Branch *i*, for generation Node “m” in the period represented by the Maximum Demand Scenario,

L_m^{peak} is the load (kVA) at Node “m” in the Network Demand Data (Load) representing the Maximum Demand Scenario,

n denotes Nodes where demand (load) is located that produce Branch incremental costs for Branch *i*, where the period that drives reinforcement is the period represented by the Minimum Demand Scenario,

ΔC_i^n is the Branch incremental cost (£/annum) for Branch *i*, for generation Node “n” in the period represented by the Minimum Demand Scenario,

$L_n^{off\text{-}peak}$ is the load (kVA) at Node "n" in the Network Demand Data (Load) representing the Maximum Demand Scenario load.

8.7 The negative cost recovery for a Branch is the summation of the cost recovery for the particular Branch across all Nodes where the Node's contribution is negative. This is expressed mathematically below:-

$$NegativeCostRecovery_i =$$

$$\left|\left(\left(\sum_{k,\Delta C_i^k>0}(-\Delta C_i^k)\cdot G_k^{peak}+\sum_{l,\Delta C_i^l<0}(\Delta C_i^l)\cdot G_l^{off-peak}\right)/100\right)+\right.$$

$$\left.\left(\left(\sum_{m,\Delta C_i^m<0}(\Delta C_i^m)\cdot L_m^{peak}+\sum_{n,\Delta C_i^n>0}(-\Delta C_i^n)\cdot L_n^{off-peak}\right)/105.26\right)\right|$$

where:

NegativeCostRecovery$_i$ is the annual recovered 'negative' costs (i.e. credit). Each £/annum figure is negative and the absolute value of the total cost recovery is calculated. All quantities are defined in the paragraph above.

8.8 The actual reinforcement cost of a Branch is determined by:-

ActualReinforcementCost$_i$ = AnnuityRate•CostOfReinforcementSolution$_i$

Where:

ActualReinforcementCost$_i$ is the annuitised reinforcement cost for Branch *I*;

AnnuityRate is the annuity rate used in the calculation of Branch incremental costs, as described in Attachment 1 below; and

CostOfReinforcementSolution$_i$ is the reinforcement cost for Branch *i*, as used in the calculation of the Branch incremental cost.

8.9 A Positive Recovery Factor is determined for each Branch, as follows:

a. if ***PositiveCostRecovery$_i$*** is greater than ***ActualReinforcementCost$_i$*** for Branch *i*, the Positive Recovery Factor, s_{Pi}, is given by:

s_{Pi} = *ActualReinforcementCost$_i$ / PositiveCostRecovery$_i$*

b. otherwise:

$s_{Pi} = 1$

8.10 A Negative Recovery Factor is calculated for each Branch in the following way:

a. if $\boldsymbol{NegativeCostRecovery_i}$ is greater than $\boldsymbol{ActualReinforcementCost_i}$ for Branch *i*, the Negative Recovery Factor, s_{Ni}, is given by:

$s_{Ni} = ActualReinforcementCost_i / NegativeCostRecovery_i$

b. otherwise:

$s_{Ni} = 1$

8.11 Two Recovery Factors are determined for each Branch. The Positive Recovery Factor for a particular Branch is applied to all positive Branch incremental costs associated with that Branch, when calculating Nodal incremental costs, irrespective of the period to which the Branch incremental costs relate. Similarly, the Negative Recovery Factor for a particular Branch is applied to all negative Branch incremental costs associated with that Branch, when Nodal incremental costs are calculated.

8.12 For Nodes where demand (load) is located:

a. Table 8.12 describes the comparison performed for Branch reinforcements identified by application of increments to a Node where demand (load) is located.

b. For the Maximum Demand Scenario the increment is applied in the demand (load) direction. If such an increase in demand (load) accelerates the reinforcement ($\boldsymbol{\Delta C_i^{peak} > 0}$) the demand should be charged (Table 8.12, the first row, column 'Credit/Charge'). For the Minimum Demand Scenario the increment is applied in the generation direction (a reduction of demand). If such reduction of demand (load) would accelerate the reinforcement ($\boldsymbol{\Delta C_i^{peak} > 0}$) than the demand charge takes the form of a credit (Table 8.12 the third row, column 'Credit/Charge').

c. It should be pointed out that each Branch incremental cost is considered in just one out of two charge periods (Peak or Off-Peak but not both) based on the scenario that drives the maximum absolute value of Branch incremental cost, as shown in Table 8.12. A calculation of Nodal incremental costs and Nodal marginal charges for a simple network example is given in Attachment 2 - Calculation of Peak and Off-Peak Charges - A simple example, below.

d. To calculate the Peak Nodal incremental cost, a sum of all peak incremental costs $\boldsymbol{\Delta C_i^{peak}}$, each scaled by the appropriate Recovery Factor $\boldsymbol{S_i}$, over all Branches where the Maximum Demand scenario drives reinforcements, associated with the application of an increment at the Node, should be determined. To calculate the Off-Peak Nodal incremental cost a sum of all off-peak incremental costs $\boldsymbol{\Delta C_i^{offpeak}}$, each scaled by the appropriate Recovery Factor $\boldsymbol{S_i}$, over all Branches where the Minimum Demand scenario drives the reinforcements, associated with the application of an increment at the Node, should be determined.

e. To calculate the £/kVA/annum Peak and Off-Peak Nodal marginal charges the obtained sums should be divided by the corresponding kVA increment (using 0.1 MW at 0.95 power factor). A calculation of Nodal incremental costs and Nodal marginal charges for a simple network example is given in Attachment 2 - Calculation of Peak and Off-Peak Charges - A simple example, below.

f. The Peak and Off-Peak Nodal marginal charges are the main output results that will be used for the calculation of the total Use of System Charges. The other outputs are discussed in Attachment 3 - Output Results, below.

g. The adopted sign convention with respect to Peak Charges and Off-Peak Charges (output values) is given in the last column of Table 8.12. It should be noted that the convention follows the sign of ∆Ci.

Table 8.12 Scenarios that drive reinforcement and the rules for the calculation of Branch reinforcement charges/credits for a demand (load) located at a Node

Increment Direction	Branch incremental cost comparison	Reinforcement cost scenario assigned to the Branch	Sign of ΔC_i	Accelerate/ Delay Reinforcement	Charge/Credit £/kVA/annum	Output Convention
Demand Increase	$abs(\Delta C_i^{peak}) > abs(\Delta C_i^{offpeak})$	Maximum Demand (Peak)	$\Delta C_i^{peak} > 0$	Accelerate	Peak Charge	Positive
Demand Increase	$abs(\Delta C_i^{peak}) > abs(\Delta C_i^{offpeak})$	Maximum Demand (Peak)	$\Delta C_i^{peak} < 0$	Delay	Peak Credit	Negative
Demand Reduction	$abs(\Delta C_i^{peak}) < abs(\Delta C_i^{offpeak})$	Minimum Demand (Off-Peak)	$\Delta C_i^{offpeak} > 0$	Accelerate	Off-Peak Credit	Positive
Demand Reduction	$abs(\Delta C_i^{peak}) < abs(\Delta C_i^{offpeak})$	Minimum Demand (Off-Peak)	$\Delta C_i^{offpeak} < 0$	Delay	Off-Peak Charge	Negative

Generation Nodes

8.13 For Nodes where generation is located:

a. To decide which scenario drives the Branch reinforcement for a Node where a generator is located Table 8.13 should be used.

b. For the Maximum Demand Scenario the increment is applied in the demand direction (a reduction of generation). If such reduction of generation delays the reinforcement ($\boldsymbol{\Delta C_i^{peak} <}$ the generator should be charged (the second row, column 'Credit/Charge'). For the Minimum Demand Scenario the increment is applied in the generation direction (an increase in generation). If such increase in generation delays the reinforcement ($\boldsymbol{\Delta C_i^{offpeak} < 0}$) the generator should be credited (the fourth row, column 'Credit/Charge').

c. It should be pointed out that each Branch incremental cost is included in one of two charge periods (Peak or Off-Peak but not both) based on the scenario that drives the maximum absolute value of Branch incremental cost as shown in Table 8.13.

d. To calculate the Peak Nodal incremental cost a sum of Peak incremental cost $\boldsymbol{\Delta C_i^{peak}}$, each scaled by the appropriate Recovery Factor $\boldsymbol{S_i}$, over all Branches where the Maximum Demand scenario drives reinforcements, associated with the application of an increment at the Node, should be determined. To calculate the Off-Peak Nodal incremental cost a sum of off-peak incremental cost $\boldsymbol{\Delta C_i^{offpeak}}$, each scaled by the appropriate Recovery Factor $\boldsymbol{S_i}$, over all Branches where the Minimum Demand scenario drives the reinforcement, associated with the application of an increment at the Node, should be determined.

e. To calculate the £/kVA/annum Peak Off-Peak Nodal marginal charges the obtained sums should be divided by the corresponding kVA increment (using 0.1 MW at unity power factor). The last column given

in Table 8.13 indicates the sign convention adopted for the output values. It should be noted that the convention follows the sign of ΔC_i.

Table 8.13 Scenarios that drive reinforcement and the rules for the calculation of Branch reinforcement charges/credits for a generation located at a Node

Increment Direction	Branch incremental cost comparison	Reinforcement cost scenario assigned to the Branch	Sign of ΔC_i	Accelerate / Delay Reinforcement	Charge /Credit £/kVA/ annum	Output Convention
Generation Reduction	$abs(\Delta C_i^{peak}) > abs(\Delta C_i^{off\text{-}peak})$	Maximum Demand (Peak)	$\Delta C_i^{peak} > 0$	Accelerate	Peak Credit	Positive
Generation Reduction	$abs(\Delta C_i^{peak}) > abs(\Delta C_i^{off\text{-}peak})$	Maximum Demand (Peak)	$\Delta C_i^{peak} < 0$	Delay	Peak Charge	Negative
Generation Increase	$abs(\Delta C_i^{peak}) < abs(\Delta C_i^{off\text{-}peak})$	Minimum Demand (Off-Peak)	$\Delta C_i^{off\text{-}peak} > 0$	Accelerate	Off-Peak Charge	Positive
Generation Increase	$abs(\Delta C_i^{peak}) < abs(\Delta C_i^{off\text{-}peak})$	Minimum Demand (Off-Peak)	$\Delta C_i^{off\text{-}peak} < 0$	Delay	Off-Peak Credit	Negative

Decomposition of Nodal Incremental Costs

8.14 Each charge at a Node is decomposed into two sub-elements, termed 'local' and 'remote' such that:

$$ChargeAtNode^{Peak} = LocalChargeAtNode^{Peak} + RemoteChargeAtNode^{Peak}$$

$$ChargeAtNode^{Off-Peak} = LocalChargeAtNode^{Off-Peak} + RemoteChargeAtNode^{Off-Peak}$$

8.15 These sub-elements use the voltage of each Branch as a proxy to determine whether a particular Branch incremental cost should be regarded as an incremental cost associated with an asset close to the Node where the increment was applied, or whether incremental cost should be regarded as being associated with an asset that is remote from the Node.

8.16 The local element of each Nodal incremental cost is derived by summating the Branch incremental costs associated with:

a. Branches that are operating at the same nominal voltage as the voltage of the Node where the increment was applied; and

b. Branches that represent, transformation from a higher voltage down to the same nominal voltage as the voltage of the Node where the increment was applied.

8.17 The remote element of each Nodal incremental cost is derived from the Branch incremental costs from all Branches other than those where the Branches are operating at the same nominal voltage as the voltage of the Node where the increment was applied, or where the Branches represent transformation from a higher

voltage down to the same nominal voltage as the Node where the increment was applied. In other words, all Branches that are not 'local' are 'remote'.

Individual Connectees Connected To Multiple Nodes

8.18 Where individual Connectees are connected to more than one Node within the Authorised Network Model (for example sites with multiple Exit Points or Entry Points) they should be considered as a single entity in the calculation of final Use of System Charges. Such Connectees are treated as being connected to a 'Hybrid Customer' Node.

8.19 'Hybrid Customer' Nodes will, for either Demand (load) or Demand (generation) as appropriate for each individual Connectee:

combine the (Charge 1) charges associated with each of the Nodes through the use of a weighted average based on the proportion of the Connectee's demand observed at each of the Nodes in the Maximum Demand Scenario, under Normal Running Arrangements;

combine the (Charge 2) charges associated with each of the Nodes through the use of a weighted average based on the proportion of the Connectee's demand observed at each of the Nodes in the Minimum Demand Scenario, under Normal Running Arrangements; and

aggregate Active Power and Reactive Power data for either Demand (Load) or Demand (Generation) as appropriate, relating to all relevant Nodes (Items 5 to 8 of in Table 14 - Incremented flow analysis, in Attachment 2 - Calculation of Peak and Off-Peak Charges - A simple example, below).

8.20 Where 'Hybrid Customer' Nodes are created, the Active Power and Reactive Power data in the output information for each of the Nodes to which the Connectee is connected will be set to zero so as not to double-count the aggregate demand data stated at the 'Hybrid Customer' Node.

8.21 An example of the creation of a 'Hybrid Customer' Node is given below for a single Demand (load) Connectee connected to two Nodes, designated Node A and Node B. The output data:

Charge 1 hybrid =

((Chrg1A x MaxDemA) + (Chrg1B x MaxDemB)) / (MaxDemA + MaxDemB)

Charge 2 hybrid =

((Chrg2A x MinDemA) + (Chrg2B x MinDemB)) / (MinDemA + MinDemB)

Max. demand data hybrid = MaxDemA + MaxDemB

Min. demand data hybrid= MinDemA + MinDemB

Where

Chrg1A = Charge 1 value (corresponding to the Maximum Demand Scenario) at Node A

Chrg2A = Charge 2 value (corresponding to the Minimum Demand Scenario) at Node A

MaxDemA = the demand in the Maximum Demand Scenario at Node A

MinDemA = the demand in the Minimum Demand Scenario at Node A

and equivalent terms are defined for Node B.

ATTACHMENT 1 - CALCULATION OF BRANCH INCREMENTAL COST

1 Branch incremental cost is calculated using the outputs of power flow analysis discussed in the Outputs from Power Flow Analysis section and the following formulae for both Maximum and Minimum Demand Scenario:

$$\Delta C_i = [NetPresentValue(inc) - NetPresentValue(base)]i \cdot AnnuityRate$$

$$NetPresentValue(inc) = \frac{CostOfReinforcementSolution}{[1 + DiscountRate]^{YearsToReinforcement(inc)}}$$

$$NetPresentValue(base) = \frac{CostOfReinforcementSolution}{[1 + DiscountRate]^{YearsToReinforcement(base)}}$$

CostOfReinforcementSolution is the modern equivalent asset value (MEAV) of reinforcing the particular asset, bearing in mind the requirements of similar historic projects[1]. This cost is the same under both base and incremental conditions and it should be annualised using the following annuity rate:

[1] Distributors should use the specifications and costs of similar, past reinforcement projects as a means for determining the requirements and costs of a particular future reinforcement project.

$$AnnuityRate = \frac{DiscountRate}{1 - \left[\frac{1}{(1+DiscountRate)^{AnnuityPeriod}}\right]}$$

DiscountRate is set to equal the latest pre-tax real weighted average cost of capital (CC below) for each DNO Party calculated using the following formula:

CC = (Gearing Assumption x Pre-Tax Cost of Debt) + (1- Gearing Assumption) * (Post Tax Cost of Equity / (1-Corporation Tax Rate))

where:

Gearing Assumption is set to the ‘Notional gearing’ value for the regulatory year for which tariffs are being set in the latest version of the PCFM (InputSummary sheet, Finance inputs, Vanilla allowed return on capital) prepared for the relevant DNO Party for publication with such tariff setting on the DNO Party’s website;

Pre-Tax Cost of Debt is set to the ‘Allowed return on debt’ value for the regulatory year for which tariffs are being set in the latest version of the PCFM (InputSummary sheet, Finance inputs, CAPM calculator tool:

allowed return on debt) prepared for the relevant DNO Party for publication with such tariff setting on the DNO Party's website;

Post Tax Cost of Equity is set to the 'Allowed return on equity' value for the regulatory year for which tariffs are being set in the latest version of the PCFM (InputSummary sheet, Finance inputs, CAPM calculator tool: allowed return on equity) prepared for the relevant DNO Party for publication with such tariff setting on the DNO Party's website; and

Corporation Tax Rate is set to the 'Corporation tax rate' value for the regulatory year for which tariffs are being set in the latest version of the PCFM (InputSummary sheet, Tax, Tax policy) prepared for the relevant DNO Party for publication with such tariff setting on the DNO Party's website.

In the event of any value not being available from the above data sources, the DNO Party will prepare a forecast of the value to be used in the CC formula instead.

The CC value is calculated as a percentage, and rounded to two decimal places.

AnnuityPeriod is the period over which costs are annualised. This period is set to 40 years and represents the typical life of an asset.

2 Power flows and Branch capacities calculated by the power flow analysis under base and incremental conditions are fed into the following formulae to calculate the time to reinforcement for each asset under base and incremental conditions.

$$YearsToReinforcement\,(base) = \frac{log(BranchCapacity) - log(BasePowerFlow(MVA))}{log(1 + GrowthRate)}$$

$$YearsToReinforcement\,(inc) = \frac{log(BranchCapacity) - log(IncPowerFlow(MVA))}{log(1 + GrowthRate)}$$

Branch Capacity is the MVA rating of the "critical" asset in the considered Branch divided by the corresponding Security Factor; a pair of Branch capacities is calculated for maximum demand and minimum demand conditions.

3 A single underlying network growth rate is used to assess the timing of future reinforcement for demand and generation charges. It represents the long run growth of all DNO Parties' Distribution Systems and is set to 1% growth per annum.

4 A pair of incremental costs (base and incremental) is calculated for each Branch using the procedure described in this attachment and power flows obtained from Maximum Demand Scenario and Minimum Demand Scenario.

5 Sense checking of the results produced by application of the Security Factor to the Incremented Flow should be undertaken prior to the calculation of Branch incremental cost, to identify where this approach leads to an estimation of excessively large (and non-credible) changes in Branch utilisation. Where such cases are

encountered a more reasonable approximation to the anticipated change in power flow in the Branch should be used in the derivation of the Branch incremental cost.

6 It is recommended that a more reasonable approximation to the Branch power flow under incremented conditions should be applied where:-

- the Base Case Flow (MVA) for a particular Branch is less than a 'low base case powerflow' threshold. This threshold should be defined by examination of the outputs from the power flow analysis, though a threshold of 0.5MVA is suggested as a reasonable 'typical' value; or
- the Security factor for a particular Branch is greater than 6; or
- the absolute value of *Flow_Increment* > *k* * *Nodal_Increment* / *Security Factor*

Where:-

Flow_Increment = Incremented Flow (MVA) – Base Case Flow (MVA)

Nodal_Increment = the size of increment applied to the Node in the Incremented Flow Analysis (in MVA); and

k is a factor to take account of losses etc., determined by examining the maximum value of Flow Increment observed in the results from the Incremented Flow Analysis, such that:

$$k = \left[\text{Max of}\left(\frac{|\text{Flow\_Increment}|}{\text{Nodal\_Increment}}\right)\right] + 0.5$$

7 Where it is identified that a more reasonable approximation to Branch power flow under incremented conditions should be used, the inputs used in the calculation of 'Years To Reinforcement$_{(inc)}$ are adjusted so that they reflect the utilisation of the Branch that would be determined if a power flow equal to ((Base Case Flow * Security Factor) + Flow Increment) were to be compared to the actual Branch rating.

ATTACHMENT 2 - CALCULATION OF PEAK AND OFF-PEAK CHARGES – A SIMPLE EXAMPLE

1 The attachment outlines the calculation of Peak and Off-peak Nodal marginal charges for a simple example shown in Figure 7. The Branch parameters (resistances and reactances), and Branch Ratings (Winter/Summer) given in Figure 7 should be used only for illustrative purposes.

2 The network example shown in Figure 7 represents a single supply point, which supplies two network substations under Normal Running Arrangements. Node A represents a supply point and is modelled as a slack bus.

Figure 7 - Branch reactances, resistances and ratings

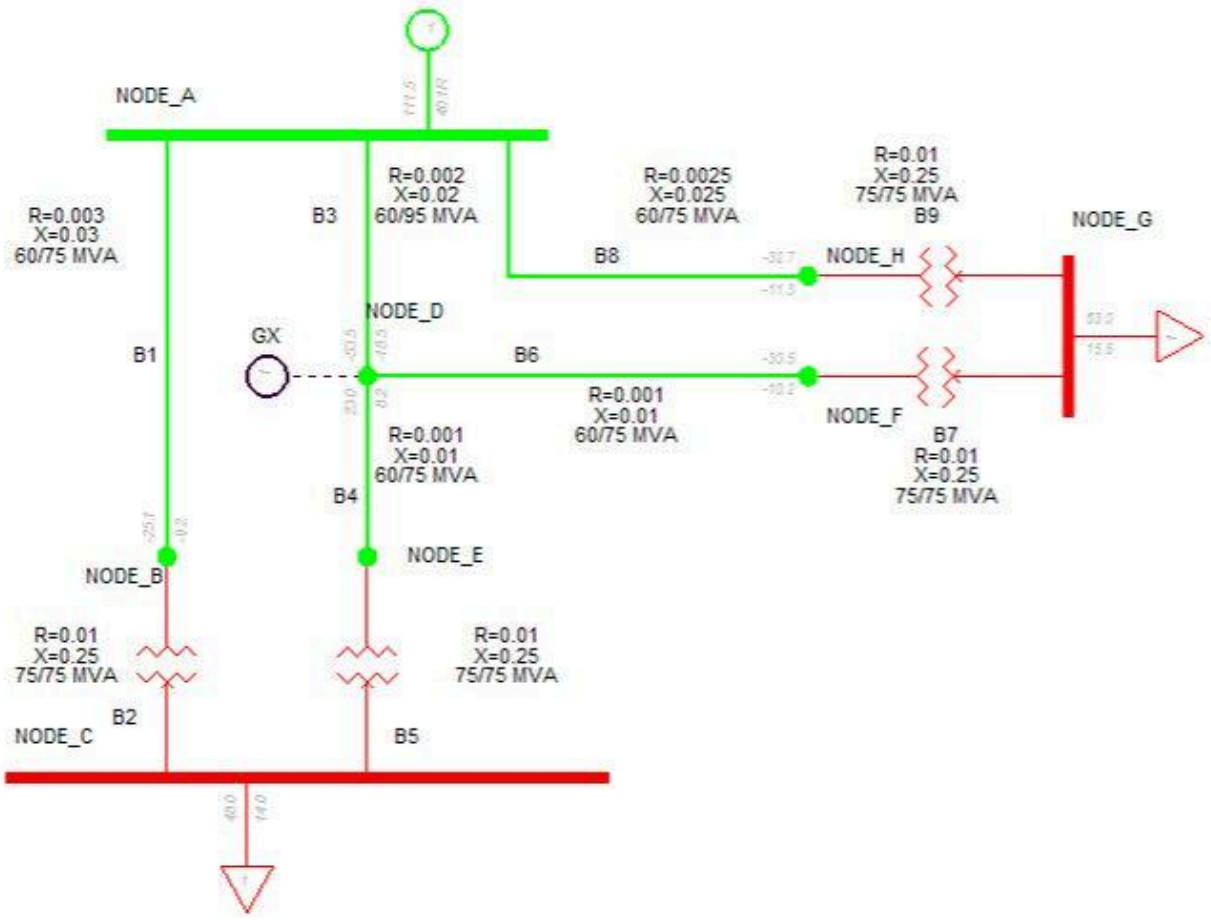

3 Both the Maximum Demand Scenario and Minimum Demand Scenario are analysed in this example.

Base Case Analysis

4 The network model populated with the Maximum Demand Data is represented by a load of 48MW and 14MVAr modelled at Node C and a load of 63MW and 15.8MVAr modelled at Node G. The generator connected to Node D does not export any MW/MVAr to the network. The Base Case Flows are shown in Figure 8.

5 The network model is populated with the Minimum Demand Data by the application of an appropriate Scaling Factor to demand (load) connected to the Nodes. The generator connected to Node exports 5.0 MW and 2.0 MVAr in the network The Base Case Flows are shown in Figure 9.

Figure 8 - Base Case Flows- Maximum Demand Scenario

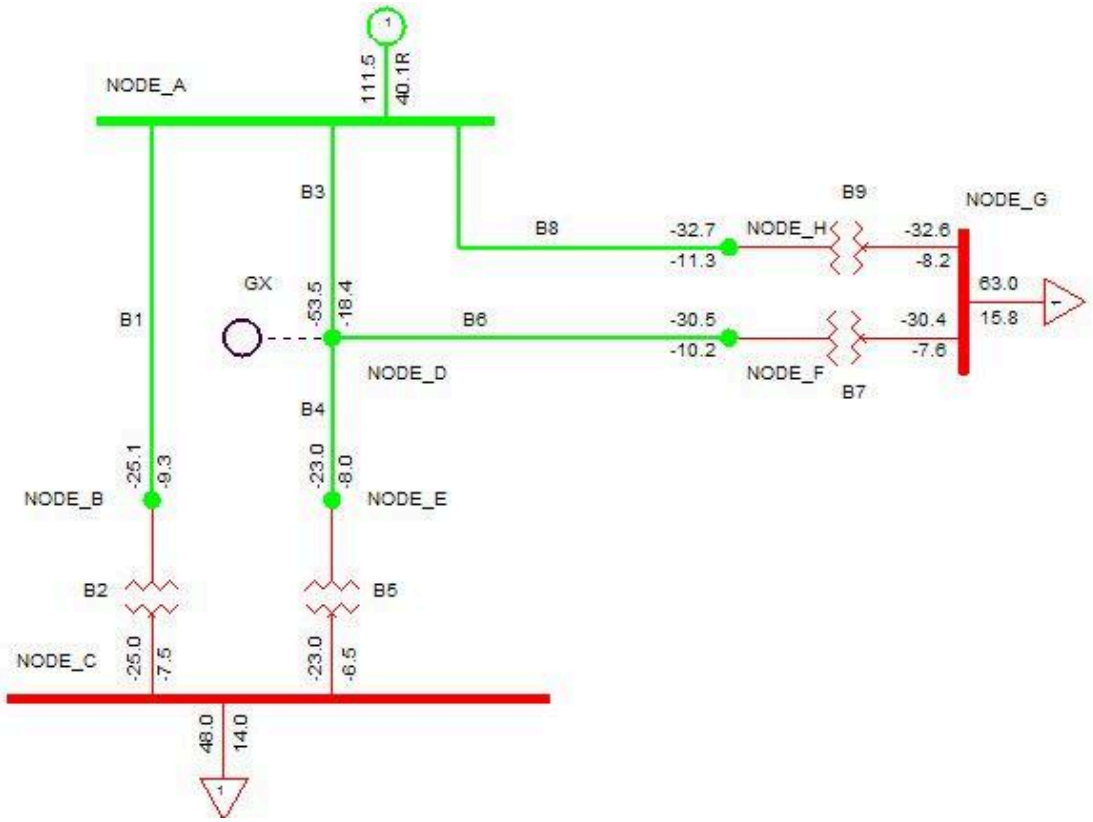

Figure 9 - Base Case Flows- Minimum Demand Scenario

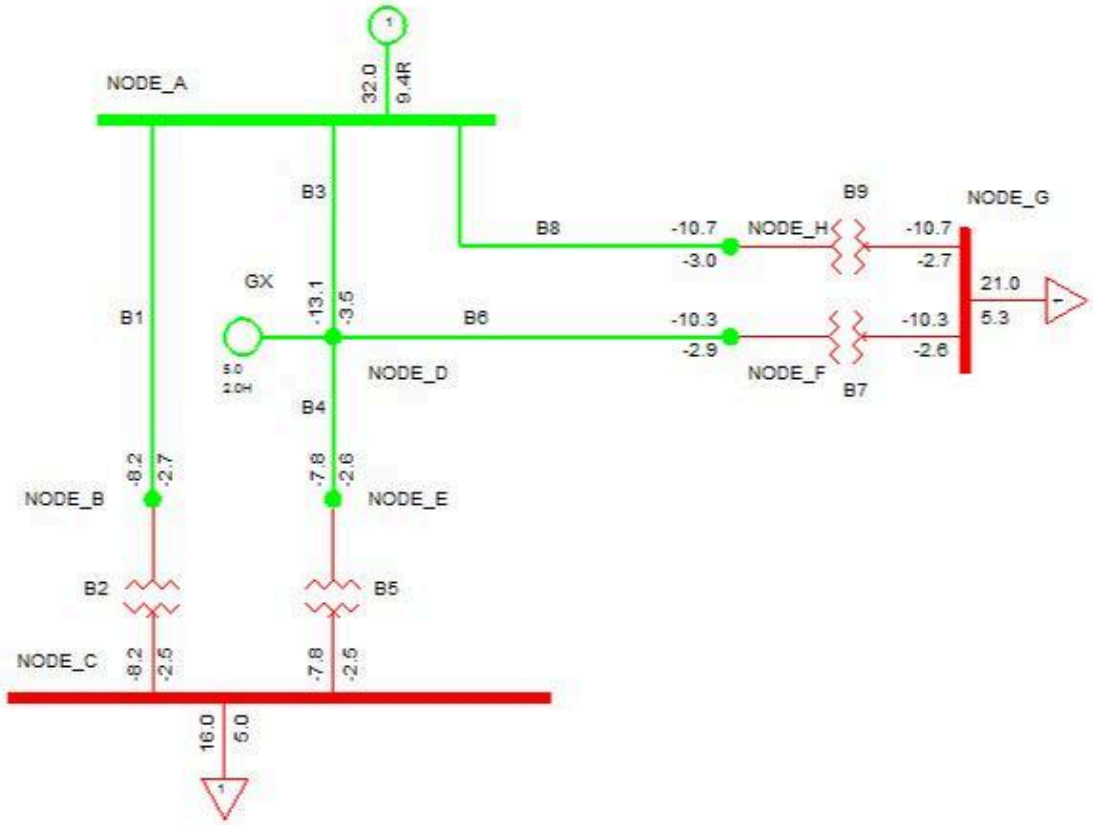

Contingency Analysis

6 The Contingency Analysis focuses on three contingencies only. The post-contingent flows are given in **Figure 10, Figure 11**, and **Figure 12** for the Maximum Demand Scenario and in **Figure 13, Figure 14,** and **Figure 15** for the Minimum Demand Scenario. The dashed line shows the Branches that are subject to the outage.

Figure 10 - Maximum Demand Scenario - Contingency Case 1

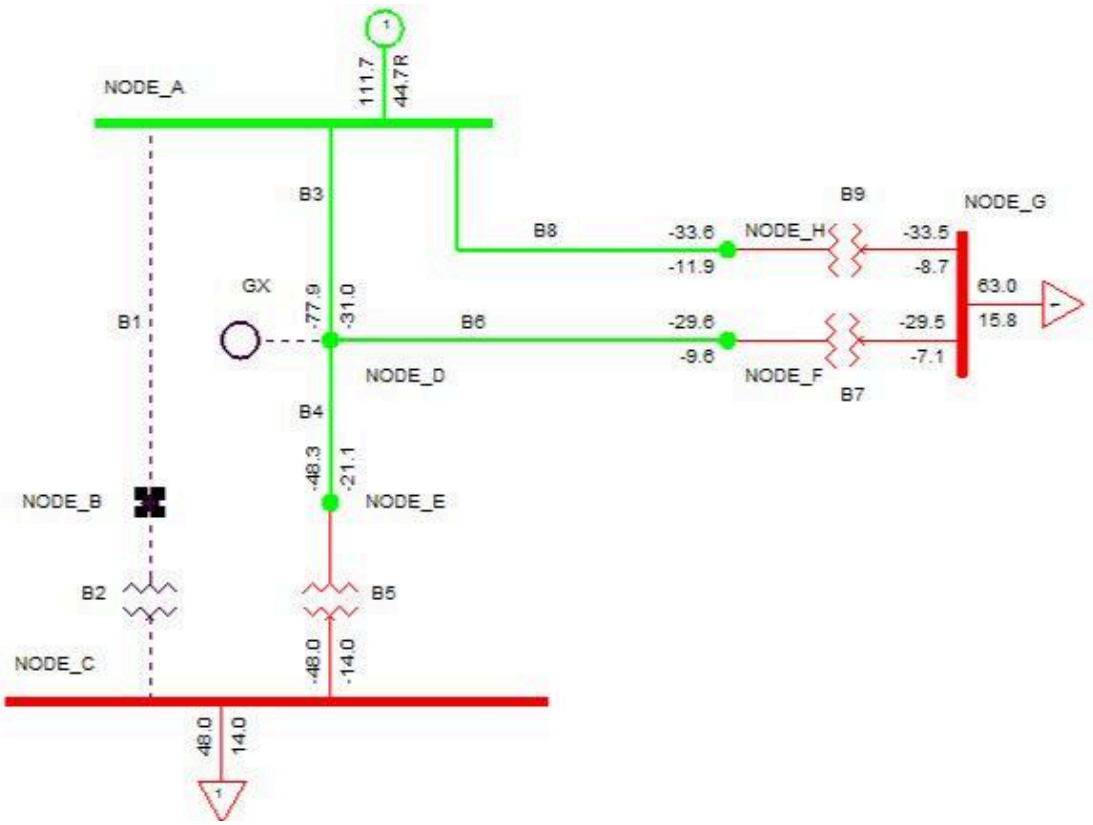

Figure 11 - Maximum Demand Scenario - Contingency Case 2

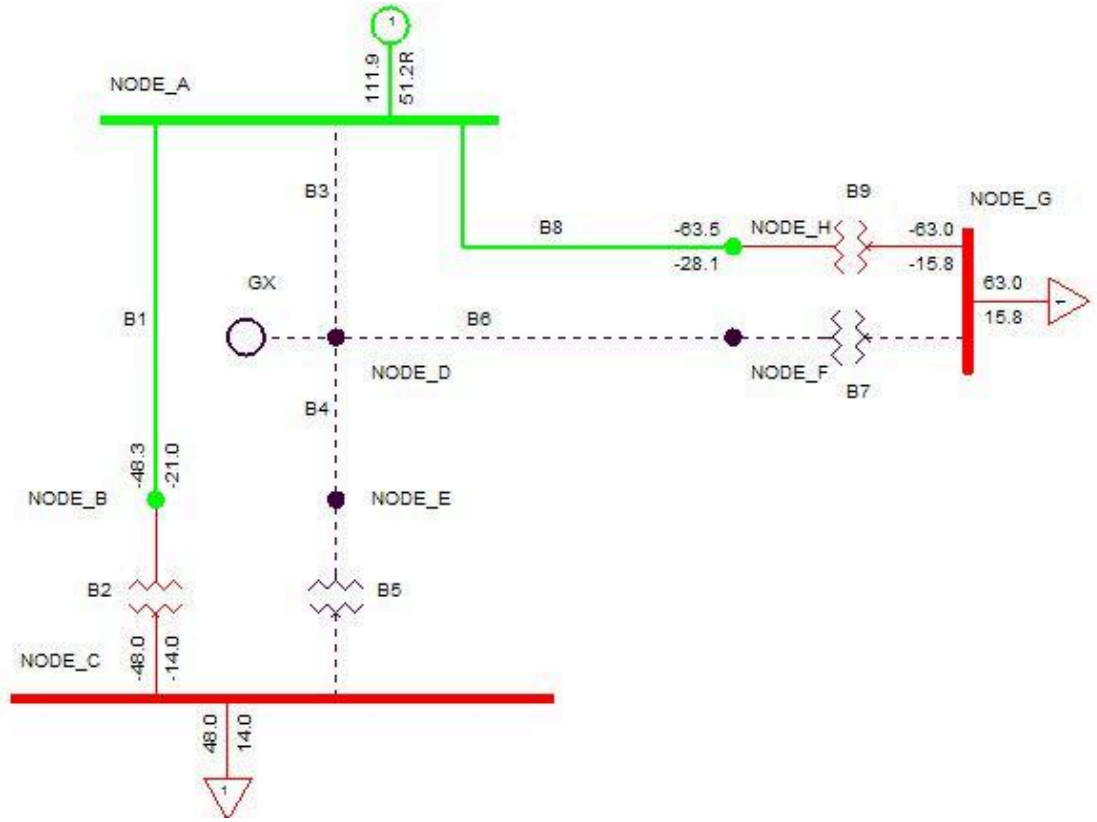

Figure 12 - Maximum Demand Scenario - Contingency Case 3

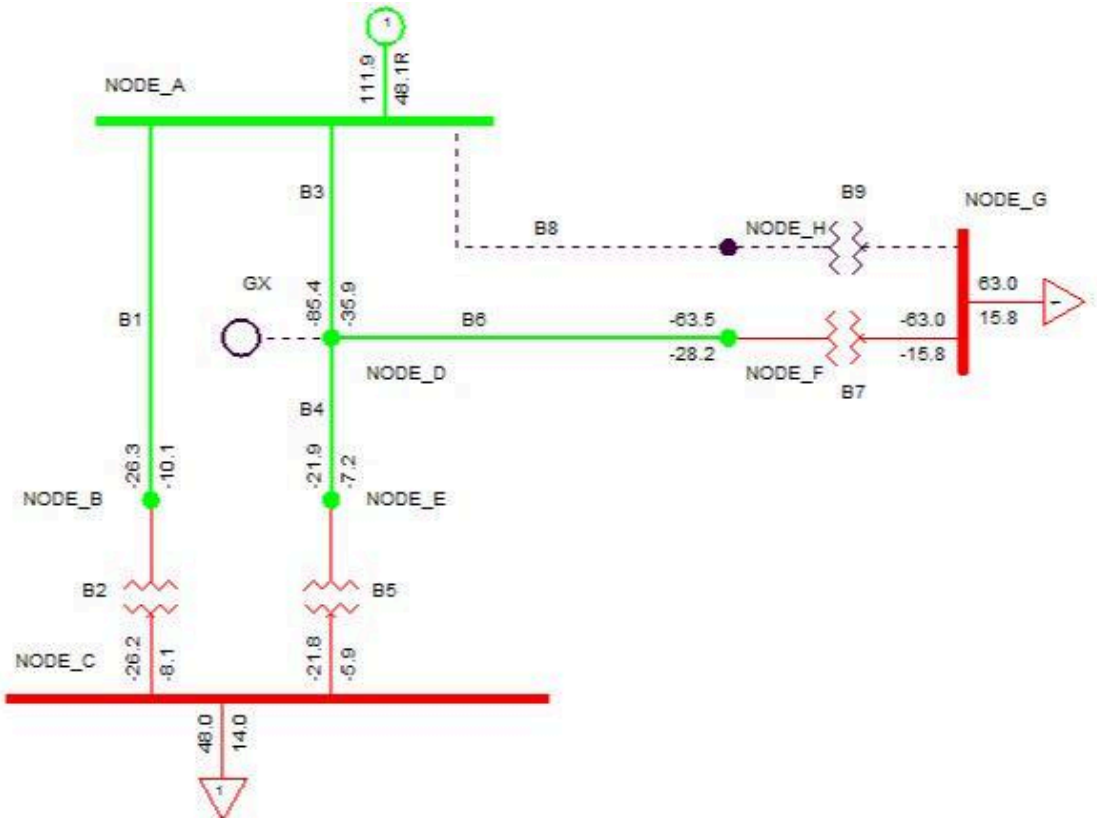

Figure 13 - Minimum Demand Scenario - Contingency Case 1

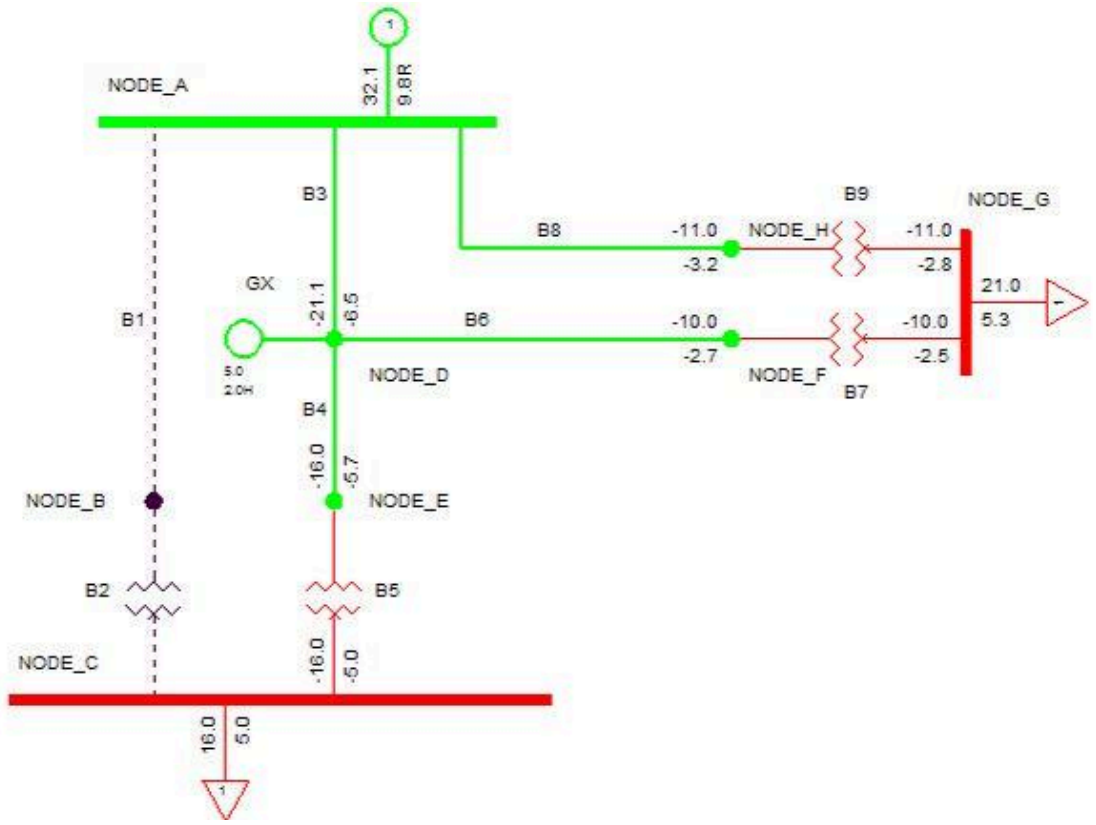

Figure 14 - Minimum Demand Scenario - Contingency Case 2

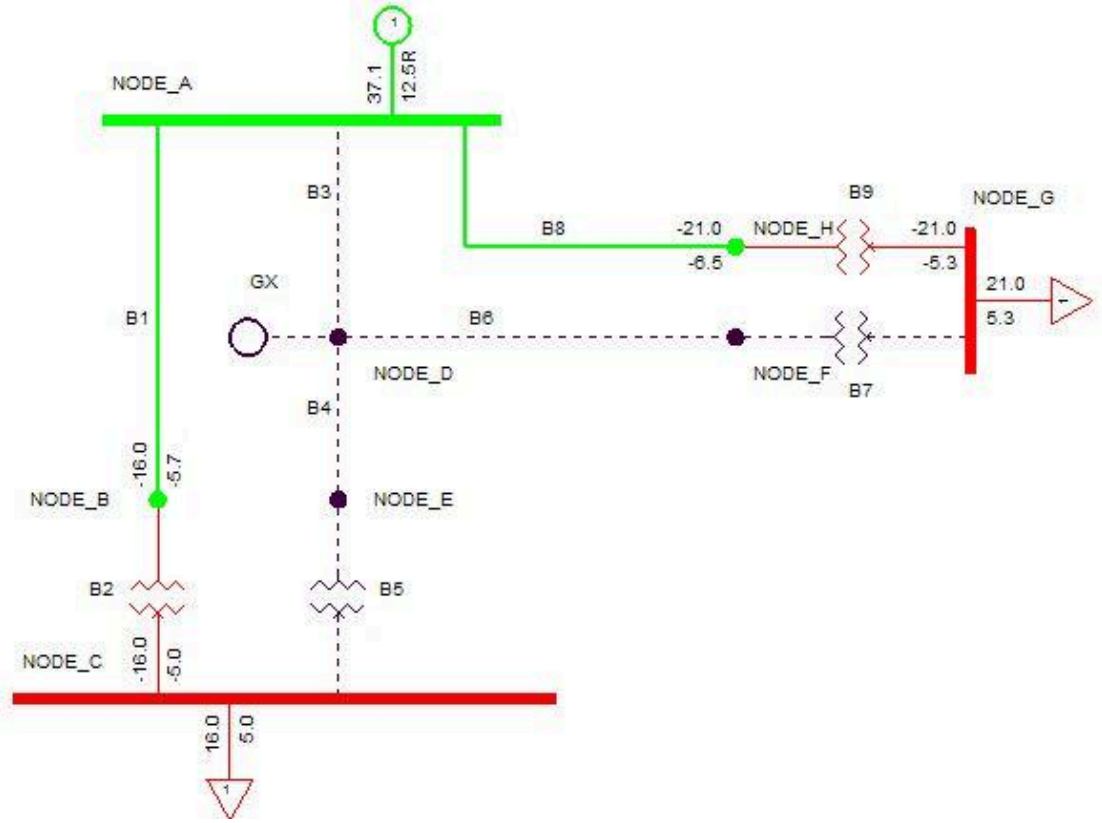

Figure 15 - Minimum Demand Scenario - Contingency Case 3

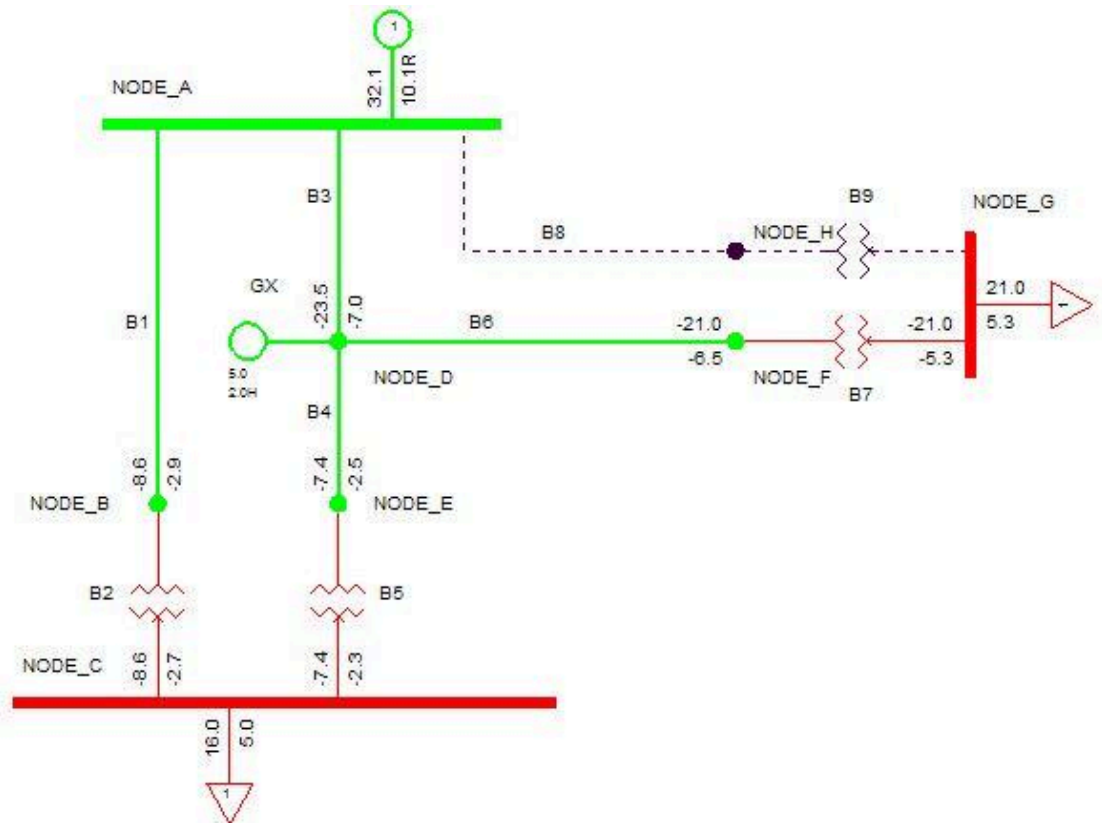

7 The calculation of Security Factors is summarised in Table 7 and Table 7A for the Maximum Demand Scenario and Minimum Demand Scenario, respectively. Each table contains information (for all Branches and both Maximum Demand and Minimum Demand Scenario) related to:

- Base Case Flows.
- Maximum Contingency Flow.
- Security Factor which is a ratio of Maximum Contingency Flow and Base Case Flow.
- Contingency Case referring to the contingency case that causes the Maximum Contingency Flow.
- Branch Winter/Summer Rating.
- Branch Capacity which is a ratio of the corresponding Branch Rating and Security Factor.
- Years to Reinforcement (base) - which is a year when the corresponding Branch will reach its Branch Capacity assuming annual Branch flow growth of 1% based on an exponential growth function. For, example Branch B5 will reach its Branch Capacity after 35.49 years for Maximum Demand Scenario because:
  - $34.70=24.38*(1+0.01)^{35.49}$

Table 7 - Calculation of Maximum Contingency Flow, Security Factors and Years to Reinforcement (Base Case) - Maximum Demand Scenario

Branch	Base Case Flows (MVA)	Maximum Contingency Flow(MVA)	Security Factor	Contingency Case	Winter Rating (MVA)	Branch Capacity (MVA)	Years to Reinforcement (base)
B5	24.38	52.69	2.16	1	75.00	34.70	35.49
B9	34.60	69.42	2.01	2	75.00	37.38	7.78
B1	26.85	53.01	1.97	2	75.00	37.99	34.88
B3	56.87	93.46	1.64	3	95.00	57.81	1.64
B8	34.72	70.03	2.02	2	75.00	37.19	6.89
B2	26.77	52.66	1.97	2	75.00	38.13	35.54

B4	24.40	52.83	2.16	1	75.00	34.64	35.22
B6	32.20	69.66	2.16	3	75.00	34.66	7.42
B7	32.16	69.46	2.16	3	75.00	34.73	7.72

Table 7A - Calculation of Maximum Contingency Flow, Security Factors and Years to Reinforcement (Base Case) - Minimum Demand Scenario

Branch	Base Case Flows (MVA)	Maximum Contingency Flow(MVA)	Security Factor	Contingency Case	Summer Rating (MVA)	Branch Capacity (MVA)	Years to Reinforcement (base)
B5	8.25	17.02	2.06	1	75.00	36.35	149.04
B9	11.12	22.04	1.98	2	75.00	37.86	123.10
B1	8.65	17.06	1.97	2	60.00	30.41	126.39
B3	13.62	24.58	1.80	3	60.00	33.25	89.70
B8	11.13	22.08	1.98	2	60.00	30.25	100.45
B2	8.64	17.02	1.97	2	75.00	38.05	149.04
B4	8.25	17.03	2.06	1	60.00	29.07	126.54
B6	10.72	22.05	2.06	3	60.00	29.16	100.58
B7	10.71	22.04	2.06	3	75.00	36.46	123.09

Incremented Flow Analysis

8 The Incremented Flow Analysis needs to be carried out once the Branch Capacity and Security Factors are determined. For the network example used in this attachment six power flow studies are required to determine the Incremented Flows. These studies are listed in table 8.

Table 8 - Incremented Flow Analysis – Studies

		Increment Applied			
Study		Maximum Demand Scenario		Minimum Demand Scenario	
	Type of Demand at Node Being Incremented	Power Factor	Direction	Power Factor	Direction
1-2	Node G Demand	0.95	Load	0.95	Generation
3-4	Node C Demand	0.95	Load	0.95	Generation
5-6	Node D Generation	Unity	Load	Unity	Generation

9 For example, two studies are required to assess the impact of the increments applied to Node G. For Maximum Demand Scenario an increment of 0.1 MW at 0.95 power factor would be applied in the load direction, while for Minimum Demand Scenario the same increment would be applied but in the generation direction. The Incremented Flows for both studies are shown below (Figure 16 and Figure 17).

Figure 16 - Node G incremented power flow analysis for Maximum Demand Scenario

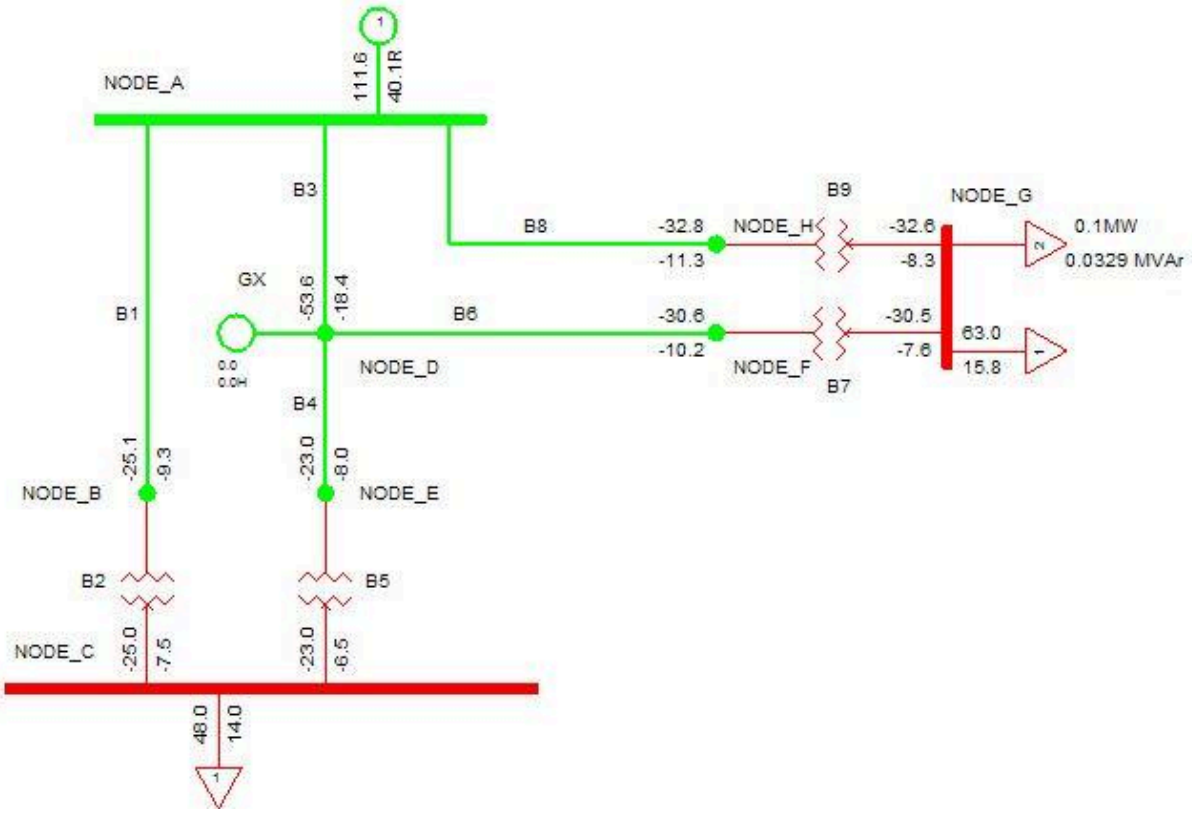

Figure 17 - Node G incremented power flow analysis for Minimum Demand Scenario

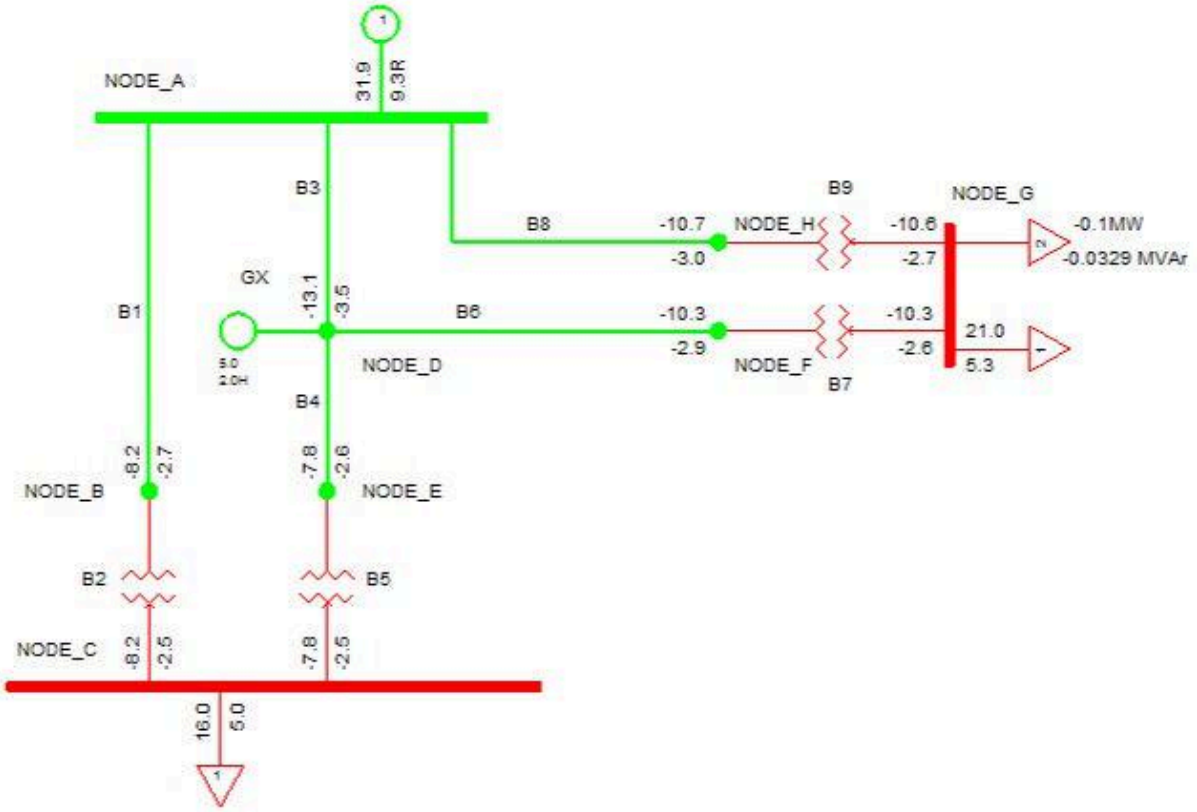

10 Using the following Table 10 of Branch reinforcement cost and the algorithm in Attachment 1, Branch incremental cost is calculated for both Maximum and Minimum Demand Scenarios. The critical scenario that drives the Branch reinforcement is then identified as the scenario with the highest absolute value of

associated Branch incremental cost. For example, for Branch i, if |ΔCi | > | |, the scenario that drives the reinforcement of the Branch is Peak; otherwise it is Off-Peak.

Table 10 - Branch Reinforcement Cost

Branch	Reinforcement Cost (£)
B1	1156250
B2	946500
B3	2312000
B4	1156250
B5	946500
B6	2312000
B7	946500
B8	1156250
B9	946500

11 Summaries of the Incremented Flow Analysis and the Branch incremental cost calculation are given in Table 14 - Incremented flow analysis. The following columns are given in the table:

1. Generation/Demand identifier.
2. Node where the corresponding increment was applied.
3. Branch ID – only for Branches which kVA flow increment is larger than 1 kVA and 0.01% of the Base Case Flow.
4. Base Case Flow (MVA) of the Branch for the scenario that drives reinforcement of the Branch. The scenario (either Maximum Demand Scenario-Peak, or Minimum Demand Scenario -Off-Peak) that drives reinforcement of the Branch is the one with the highest absolute value of associated Branch incremental cost.
5. Branch Capacity (MVA) of the Branch (see previous section – Contingency Analysis).
6. Branch Incremented Flows (MVA) for the scenario that drive reinforcement of the Branch.
7. Years to Reinforcement (base) in years - is the time to reinforcement of the Branch calculated under Base Case conditions as discussed in the previous section (see previous section – Contingency Analysis).
8. Years to Reinforcement (inc) in years - is the time to reinforcement of the Branch calculated under incremental conditions as discussed in Attachment 1 above.
9. A product of Net Present Value (base) and annuity rate for the scenario that drives reinforcement of the Branch.
10. A product of Net Present Value (inc) and annuity rate for the scenario that drives reinforcement of the Branch.
11. Branch incremental cost ΔC_i is the difference between the values given in the columns 10 and 9.
12. The last column identifies the scenario that drives the reinforcement of the Branch.

12 Using the information provided in Table 14 - Incremented flow analysis the Peak Nodal incremental cost and Off-Peak Nodal incremental cost for the generator connected to Node D can be calculated:

- The Peak Nodal incremental cost is the sum of 294.87, -1278.73 and -328.68 which gives the total of -1312.54 £/annum.
- The Off-Peak Nodal incremental cost is the sum of all Off-Peak Branch incremental costs which is -18.77 £/annum.

13 For the demand located at Node C the corresponding costs are the sum of all Peak Branch incremental costs which based on Table 14 - Incremented flow analysis, the Peak Nodal incremental cost and Off-Peak Nodal incremental cost for the generator connected to Node D can be calculated: Table 14 - Incremented flow analysis, gives 2777.8 £/annum; and the sum of all Off-Peak Branch incremental costs which gives -10.52 £/annum.

14 The Nodal marginal charges are obtained by dividing the Nodal incremental cost by the magnitude (in kVA) of the load or generation increment, as appropriate.

Table 14 - Incremented flow analysis

Gen/Dem	At Node	Branch	Base Case Flow (MVA)	Asset Capacity (MVA)	Incremented Flow (MVA)	Years to Reinf. (base)	Years to Reinf. (inc)	NPV*Annuity Rate (base) (£/annum)	NPV*Annuity Rate (inc) (£/annum)	ΔC_i (£/annum)	Peak Off-peak
Gen	Node D	B5	24.38	34.70	24.54	35.48	34.83	6576.14	6871.01	294.87	Peak
Gen		B9	34.6	37.38	34.44	7.77	8.24	41784.75	40506.03	-1278.73	Peak
Gen		B1	26.85	37.99	26.69	34.87	35.47	8366.34	8037.65	-328.68	Peak
Gen		B3	13.62	33.25	13.53	89.69	90.35	431.65	412.88	-18.77	Off-peak
Dem	Node C	B5	24.38	34.70	24.60	35.48	34.58	6576.14	6984.45	408.32	Peak
Dem		B9	34.6	37.38	34.44	7.77	8.24	41784.75	40506.03	-1278.73	Peak
Dem		B1	26.85	37.99	26.74	34.87	35.29	8366.34	8139.17	-227.17	Peak
Dem		B3	13.62	33.25	13.57	89.69	90.06	431.65	421.13	-10.52	Off-peak
Dem		B8	34.72	37.18	34.56	6.89	7.35	54128.66	52477.83	-1650.84	Peak
Dem		B2	26.77	38.13	26.66	35.54	35.95	6551.07	6372.66	-178.41	Peak
Dem		B4	24.4	34.64	24.63	35.22	34.27	8177.67	8708.68	531.01	Peak
Dem		B6	32.2	34.67	32.37	7.42	6.89	104456.61	108210.81	3754.20	Peak
Dem		B7	32.16	34.73	32.32	7.71	7.21	41946.47	43365.89	1419.42	Peak
Dem	Node G	B5	24.38	34.70	24.35	35.48	35.61	6576.14	6522.07	-54.07	Peak
Dem		B9	34.6	37.38	34.69	7.77	7.51	41784.75	42519.02	734.26	Peak
Dem		B1	26.85	37.99	26.77	34.87	35.17	8366.34	8200.59	-165.74	Peak
Dem		B3	13.62	33.25	13.56	89.69	90.13	431.65	419.05	-12.59	Off-peak
Dem		B8	11.13	30.24	11.11	100.47	100.65	105.15	103.89	-1.26	Off-peak
Dem		B4	24.4	34.64	24.35	35.22	35.42	8177.67	8065.96	-111.72	Peak
Dem		B6	10.72	29.17	10.70	100.60	100.79	208.35	205.76	-2.59	Off-Peak
Dem		B7	32.16	34.73	32.25	7.71	7.43	41946.47	42739.94	793.47	Peak

ATTACHMENT 3 - OUTPUT RESULTS

1 The final output of the work outlined in this Schedule 18 are Peak and marginal charges in £/kVA/annum. This is not however the final EDCM Use of System Charge and further calculations under EDCM are required to derive this final charge.

2 The output data listed in Table 3 - Output information required to calculate final EHV charge, below are the minimum necessary for the calculation of the final EDCM Use of System Charges. For each Node where demand or generation is located a single pair of charges is required. For a Node where both demand and generation are located a double pair of charges is required (there will be two entries where 'Node ID' would be the same but all other values would be different).

3 The outputs from the Power Flow Analysis, the Branch Rating Data and the network cost data (see Figure 5) will also be retained in the interests of transparency.

Table 3 - Output information required to calculate final EHV charge

Item Name	Details
Location ID	Unique identifier of the Node.
Demand Type ID	Identifier for the type of demand (either 'Demand' or 'Generation')
Local Charge 1: Local Element of Peak Charge (£/kVA/annum)	See the Output results Section. A positive value of Peak Charge represents a charge to demand (load) at the Node (or a credit to generation), whilst a negative value represents a credit to demand (load) at the Node (or a charge to generation)
Remote Charge 1: Remote Element of Peak Charge (£/kVA/annum)	See the Output results Section. A positive value of Peak Charge represents a charge to demand (load) at the Node (or a credit to generation), whilst a negative value represents a credit to demand (load) at the Node (or a charge to generation)
Active power (kW) for Maximum Demand Scenario.	For a Node where demand (load) is located this would be the total kW demand (load) connected to the Node (negative value) in the Maximum Demand Scenario. For a Node where a generator is located this would be the total kW generation connected to the Node (positive value) in the Maximum Demand Scenario.
Reactive power (kVAr) for Maximum Demand Scenario.	For a Node where demand (load) is located this would be the total kVAr demand (load) connected to the Node in the Maximum Demand Scenario. For a Node where a generator is located this would be the total kVAr generation connected to the Node in the Maximum Demand Scenario.Where the current calculated for demand lags its voltage the reactive power shall be allocated the same sign as the active power. Where the current calculated for demand leads its voltage the reactive power shall be allocated the opposite sign to the active power.

ANNEX 2 – DERIVATION OF THE LRIC CHARGING FORMULA

The essential concept of the LRIC charging model is one of marginal pricing which is applicable to competitive markets. At the equilibrium point of supply and demand the clearing price in £/unit, being the cost (£) of producing another unit of output, is the economically efficient price because producers and consumers know this cost and can adjust their behaviour. The concept is illustratively shown in Figure 18 through definitions of *marginal* and *incremental* costs. Assuming a non-linear cost-demand curve, where demand can be either load or generation, marginal cost is the first derivative at the point (D^0, C^0) and it is denoted as $tg\beta$ in Figure 18(a). Marginal cost is calculated analytically when the non-linear cost-demand relationship is known and is in explicit form. In many instances, and in particular when the non-linear relationship is very complex or specified implicitly, it is preferable to calculate the first derivative in a numerical way using finite increments, which gives the incremental cost – Figure 18(b). Given the current point (D^0, C^0), demand is incremented by ΔD first, new cost $(C^0+\Delta C)$ is calculated from the cost curve next and the ratio of ΔC *to* ΔD gives the incremental cost $tg\gamma$. The smaller the increment ΔD, the closer the incremental cost to the marginal cost is.

Figure 18 - Concept of marginal (a) and incremental costs (b)

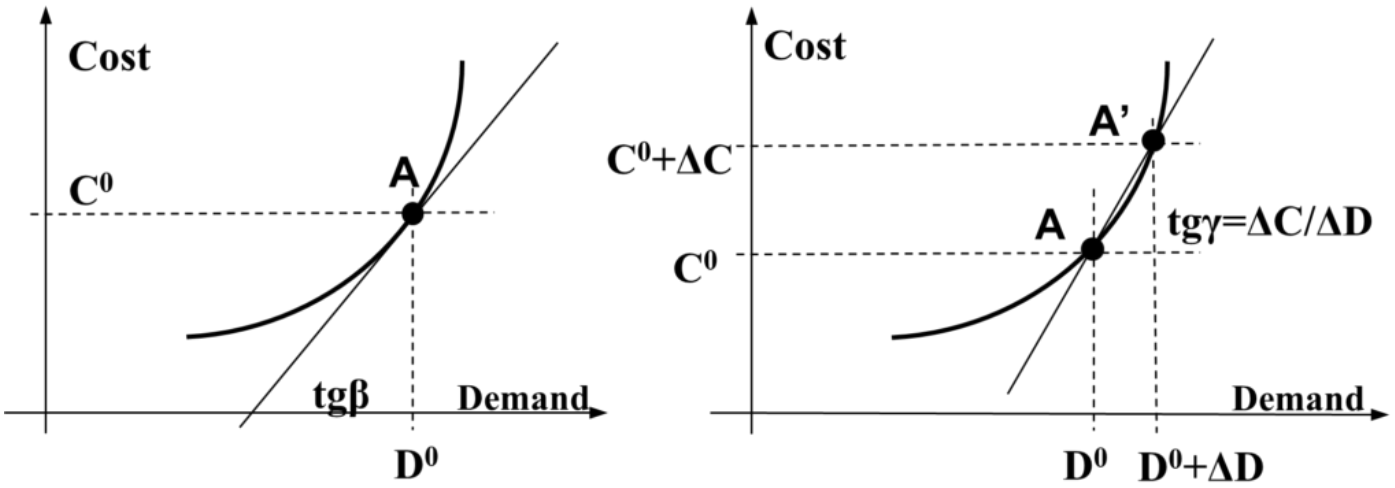

The LRIC cost model is specified on a Branch-by-Branch basis, that is, a cost expression is associated with each Branch of the network. The Branch cost is the annuitised NPV reinforcement cost, or in mathematical terms:

$$BranchCost_i = NPV_i \cdot AnnuityRate = \frac{CostOfReinforcementSolution_i}{(1+DiscountRate)^{YearsToReinforcement_i()}} \cdot AnnuityRate\,£/annum$$

where i is index of Branch, NPV_i is present value of the Branch cost $CostOfReinforcementSolution_i$ discounted at rate *DiscountRate* specified by regulator, $YearsToReinforcement_i()$ is time in future when reinforcement of $Branch_i$ will be required if the power flow grows at the given rate, and *AnnuityRate* is the standard annuity factor calculated from the discount rate and annuity period. It needs to be stressed that the only quantity that depends on Connectees' demands (both load and generation) is time to reinforcement $YearsToReinforcement_i()$, the others are constants.

Branch marginal cost is the first derivative of the Branch cost (1) with respect to demand (either load or generation) connected at any Node *k*. As $YearsToReinforcement_i()$, in expression (1) is a function of the power flow in Branch *i*, which is in turn a function of all demands D_k, $k=1,2,\ldots$, the chain rule needs to be applied to derive expression (1):

$$BranchMarginalCost_i^k = \frac{\partial BranchCost_i}{\partial D_k} = \|1 \frac{\partial BranchCost_i}{\partial YearsToReinforcement_i} \frac{\partial YearsToReinforcement_i}{\partial flow_i} \frac{\partial flow_i}{\partial D_k} \ £/kVA/annum,$$

where *Dk* is demand at Node *k* and is power flow in *Branch*$_i$.

The corresponding incremental cost is, in a similar way, given by expression:

$$BranchIncrementalCost_i^k = \frac{\Delta \text{BranchCost}_i}{\Delta D_k} = \|1 \frac{\Delta BranchCost_i}{\Delta YearsToReinforcement_i} \frac{\Delta YearsToReinforcement_i}{\Delta flow_i} \frac{\Delta flow_i}{\Delta D_k} \ £/kVA/annum.$$

It is also possible to apply an alternative approach to calculate Branch incremental cost. The finite differences are applied to *BranchCost*$_i$ and *YearsToReinforcement*$_i$*(),* and the first derivative to *flow*$_i$

$$BranchIncrementalCost_i^k = \frac{\Delta \text{BranchCost}_i}{\Delta D_k} = \|1 \frac{\Delta BranchCost_i}{\Delta YearsToReinforcement_i} \frac{\Delta YearsToReinforcement_i}{\Delta flow_i} \frac{\partial flow_i}{\partial D_k} \ £/kVA/annum,$$

where partial derivative *∂flow*$_i$*/∂D*$_k$ is calculated analytically.

The main algorithmic steps to calculate Branch incremental cost (3) or (4) are given below:

1 (Base Power Flow) Set all demands (i.e. loads and generations) to the base values and calculate base power flow in the considered Branch *BasePowerFlow*$_i$*(MVA)* using the full AC powerflow model.

2 (Base Branch Cost) From the base power flow *BasePowerFlow*$_i$*(MVA)*, Branch *i* capacity (MVA) and assumed exponential power flow growth calculate base time to reinforcement *YearsToReinforcement*$_i$*(base)* and then base Branch cost *BranchCost*$_i$*(base)* in £/annum with the aid of expression (1)

3 -

3.1 (Incremented Power Flow - expression (3)) Increment demand at Node *k* by *ΔD*$_k$ and recalculate power flows using the AC power flow model. This gives incremented power flow in the considered Branch *IncPowerFlow*$_i$*(MVA*).

3.2 (Incremented Power Flow - expression (4)) Calculate analytically from the AC powerflow model sensitivity coefficient s_i^k=*∂flow*$_i$*/∂D*$_k$ giving the linearised relationship between power flow in Branch *i* and demand at Node *k*. The incremented power flow in the considered Branch is:

$$IncPowerFlow_i\,(MVA) = BasePowerFlow_i\,(MVA) + s_i^k \cdot \Delta D_k. \qquad (5)$$

4 (Incremented Branch Cost) from the incremented power flow *IncPowerFlow*$_i$*(MVA*), Branch *i* capacity (MVA) and assumed exponential power flow growth calculate incremented time to reinforcement

YearsToReinforcement$_i$(inc) and then incremented Branch cost *BranchCost$_i$(inc)* in £/annum with the aid of expression (1).

5 (Branch Incremental Cost) Branch incremental cost in £/annum is finally calculated as:

$$BranchIncrementalCost_i^k = BranchCost_i\,(inc) - BranchCost_i\,(base)\ £/annum \quad (6)$$

Demand Connectees (both load and generation) use several Branches to offtake their load or inject the generation. These Branches can be identified by the magnitude of the incremented power flow

$$\Delta\text{flow}_i\ \ (= IncPowerFlow_i\,(MVA) - BasePowerFlow_i\,(MVA))$$

The Branch incremental costs of these Branches need to be summated in order to calculate the incremental cost for a Connectee connected at any Node. More specifically, assuming a single operating regime is studied, the LRIC charging formula for the demand Connectee (either load or generation) connected at Node k becomes:

$$NodalIncrementalCost_k = \sum_i BranchIncrementalCost_i^k\ £/annum \quad (7)$$

where summation goes over “relevant” network Branches, that is, Branches which are used by the considered Connectee.

Finally, Nodal marginal charges are derived by dividing the Nodal incremental cost by the assumed demand increment:

$$ChargeAtNode_k = \frac{NodalIncrementalCost_k}{\Delta D_k}\ £/kVA/annum,$$

where ΔD_k is assumed demand increment at node$_k$

SCHEDULE 19: PORTFOLIO BILLING

1. APPLICATION OF THIS SCHEDULE

1.1 Notwithstanding Clause 36.3, this Schedule applies to, and is binding between, each DNO Party (for the one part) and each EDNO (for the second part).

1.2 This Schedule sets out the process for determining the data by reference to which the Use of System Charges payable by the EDNO to the DNO Party are to be calculated.

1.3 In this Schedule, an **"Embedded Distribution Network Operator"** or **"EDNO"** is, in respect of each DNO Party:

a. any IDNO Party; or

b. any DNO Party acting outside of that DNO Party's Distribution Services Area,

c. which (in each case) has a Distribution System within a GSP Group associated with that DNO Party.

1.4 In this Schedule, a reference to the EDNO's **"Connectees"** shall only be a reference to those Connectees to the Distribution Systems referred to in Paragraph 1.3 (and shall not include any Connectees to other Distribution Systems of the EDNO).

1.5 The Use of System Charges calculated in accordance with this Schedule shall be payable by the EDNO in accordance with Clause 44, and shall be subject to Clause 43.7 and paragraph 2 of Schedule 4 (as if the references to the User in those Clauses and that Schedule were to the EDNO).

2. AGGREGATED DEMAND DATA

2.1 In order to calculate the Use of System Charges attributable to the EDNO's aggregated settled demand Connectees, the DNO Party will use the data provided to it by the SVAA or (for MHHS) the Market-wide Data Service.

2.2 The DNO Party shall send Daily Statements to the EDNO (including where these total zero). The DNO Party shall calculate an initial account for the EDNO following the end of each charging period.

2.3 Where a subsequent Settlement Run indicates that, as a result of such Settlement Run, the Use of System Charges are different from those previously billed, the DNO Party shall calculate such difference and the interest thereon, as soon as is reasonably practicable after such Settlement Run. Such interest shall be calculated in accordance with the provisions of Schedule 3 (as if the invoices under this Paragraph 2 were for Initial Accounts and Reconciliation Accounts).

2.4 As soon as is reasonably practicable after the end of each charging period, the DNO Party shall submit an invoice (or credit note) to the EDNO for the total aggregate amount owing by (or to) the EDNO under the initial account (under Paragraph 2.2) for that charging period combined with any reconciliation accounts (under Paragraph 2.3) for previous charging periods. However, the DNO Party shall not send the EDNO an invoice (or credit note) for the charging period if the initial account is for zero and there are no reconciliation accounts.

2.5 The DNO Party shall identify to the EDNO the amount of each such invoice which relates to each Settlement Run, broken down by Settlement Code.

3. SITE SPECIFIC DATA

3.1 In order to calculate the Use of System Charges attributable to the EDNO's site specific Connectees, the DNO Party will use data contained in the report provided by the EDNO pursuant to Paragraph 3.2 (subject to any revisions to reflect errors in such reports identified by the DNO Party pursuant to Paragraph 5).

3.2 The EDNO shall provide a report to the DNO Party, on or before the 15th day of each month, based on the amounts invoiced to Supplier/CVA Registrants by the EDNO pursuant to Clause 21 in respect of its Connectees, including all relevant data not previously reported to the DNO Party (and any adjustments to data previously reported). Where revised data is received by the EDNO and rebilled, a credit row and new debit row shall be added and reported in the spreadsheet under Paragraph 3.4.

3.3 The report shall contain the following data items in the following sequence for each invoice raised in respect of a half-hourly-settled Connectee:

a. the Market Domain I.D. or (for MHHS) the Market Participant ID of the EDNO;

b. the GSP Group code of the DNO Party;

c. the invoice reference number;

d. the unique site reference of the connection within the EDNO Distribution System;

e. the number of MPANs covered by the invoice;

f. a list of the MPANs covered by the invoice (to be set out in accordance with Paragraph 3.5);

g. the month and year of the consumption/production covered by the invoice;

h. the Line Loss Factor Class Id (as defined in the Energy Market Data Specification) for each MPAN covered by the invoice (being, for each MPAN, the “LLFC Id”) or (for MHHS) the DUoS Tariff ID for each MPAN covered by the invoice;

i. the fixed charge units (in days) covered by the invoice;

j. the units (in kWh) consumed/produced during the DNO Party's super red, red or black charging time bands, for the MPANs and in the period covered by the invoice;

k. the units (in kWh) consumed/produced during the DNO Party's amber or yellow charging time band, for the MPANs and in the period covered by the invoice;

l. the units (in kWh) consumed/produced during the DNO Party's green charging time band, for the MPANs and in the period covered by the invoice;

m. the chargeable agreed capacity (in kVA) for the MPANs covered by the invoice;

n. the chargeable excess capacity (in kVA) for the MPANs covered by the invoice; and

o. the chargeable reactive power units (in kVArh) for the MPANs covered by the invoice.

3.4 The report referred to in Paragraph 3.3 shall be provided in Excel 2003 spreadsheet format using the template in Appendix A to this Schedule 19, with each data item recorded in a separate column and row of the spreadsheet, all within the same tab.

3.5 Where a single invoice is in respect of multiple MPANs, the EDNO shall:

a. include the rows for such invoices before the rows for single-MPAN invoices;

b. include an initial row identifying the lead MPAN, with the remaining columns of that row populated with the invoice data for the MPANs collectively;

c. include in the immediately following row(s) details for each of the other MPAN(s) covered by the invoice, and with the remaining columns of the row(s) populated with a zero; and

d. in the case of a subsequent credit and/or rebill for some or all of those MPANs, quote the same lead MPAN on the first row.

3.6 Where any data item was not present or had a value of zero in the invoice raised, the report shall show zero for that data item.

3.7 Where there are no half-hourly-settled Connectees, the EDNO shall submit a nil return.

4. MPAN REPORT

4.1 On or before the 15th day of each month, the EDNO shall send to the DNO Party a list of the EDNO's MPANs for site specific half-hourly settled Connectees (including pseudo half-hourly metered UMS), together with the following information (in separate columns) for each such MPAN (as at the start of that month):

a. its trading status;

b. the date from which such trading status has been effective;

c. its energisation status; and

d. the date from which such energisation status has been effective.

4.2 Where there are no half-hourly-settled Connectees, the EDNO shall submit a nil return.

5. AUDIT

5.1 Upon not less than 15 Working Days' prior written notice, the DNO Party shall have the right to inspect and audit the consumption data and billing records of the EDNO relating to invoices referred to in Paragraph 3 or to check the accuracy of the LLFC Id or (for MHHS) DUoS Tariff ID determination under Paragraph 6.5. The EDNO shall ensure that all such data and billing records are maintained in accordance with customary recordkeeping and accounting standards.

5.2 The DNO Party shall only be entitled to exercise such right for the purposes of verifying the accuracy and completeness of the reports provided under Paragraph 3 or to check the LLFC Id or (for MHHS) DUoS Tariff ID determination under Paragraph 6.5, and shall only use the data obtained for those purposes.

5.3 The EDNO will allow the duly authorised representatives and auditors of the DNO Party who are to undertake any inspection or audit in accordance with this Paragraph 5 all reasonable assistance and adequate facilities for the proper exercise of such inspection or audit.

6. LINE LOSS FACTOR CLASS OR DUOS TARIFF ID

6.1 Subject to paragraph 6.5, the DNO Party shall use the EDNO's LLFC Id description contained in the Market Domain Data or (for MHHS) the EDNO’s DUoS Tariff ID contained in the Industry Standing Data (each as defined in the BSC) to enable the DNO Party to identify the voltage of connection of the EDNO's Connectee

and the voltage of connection of the EDNO's Distribution System, and shall notify the EDNO which of the DNO Party's charges will be applied by the DNO Party in respect of each Connectee for the purposes of the Use of System Charges the DNO Party levies on the EDNO.

6.2 Where the EDNO introduces new LLFC Ids or DUoS Tariff IDs or changes the use of existing LLFC Ids or DUoS Tariff IDs, it shall (within 15 Working Days of the same being published in the Market Domain Data or in the Industry Standing Data) notify the DNO Party of the new or changed LLFC Id or DUoS Tariff ID.

6.3 Where the EDNO has introduced new or changed LLFC Ids or DUoS Tariff IDs, the EDNO shall notify the DNO Party which of the DNO Party's charges the EDNO believes should apply in respect of the affected Connectees. The DNO Party shall nevertheless apply the charges as it considers appropriate, but any dispute regarding invoices shall be determined in accordance with Schedule 4.

6.4 Where the DNO Party alters the way in which it translates the EDNO's LLFC Ids or DUoS Tariff IDs into the DNO Party's charges, the DNO Party shall advise the EDNO of the change within 15 Working Days after such change.

6.5 Where an EDNO has UMS Connectees, the EDNO shall apply a LLFC Id or DUoS Tariff ID that reflects the voltage of the Points of Connection on the EDNO's Distribution System (as referred to in Paragraph 1.3) that provide the majority (i.e. more than 50%) of energised domestic connections on that Distribution System. Where no Points of Connection provide the majority of energised domestic connections, the EDNO and DNO Party shall negotiate in good faith to determine the LLFC Id or DUoS Tariff ID that should most reasonably apply.

6.6 The LLFC Id or DUoS Tariff ID applying pursuant to Paragraph 6.5 will be applied to the entire portfolio of UMS Connectees on the EDNOs Distribution System that are registered under the same Standard Settlement Configuration.

6.7 The DNO Party shall have the right to review the data provided to it by the SVAA pursuant to Paragraph 2.1 for the purpose of verifying the accuracy of the LLFC Id or DUoS Tariff ID applied by the EDNO to its UMS Connectees.

7. NOTICES

7.1 The EDNO shall provide all reports and other information that it is required to provide to the DNO Party in accordance with this Schedule by email to an address specified to the EDNO by the DNO Party, as varied from time to time.

APPENDIX A

EDNO MPID	GSP	Invoice No.	Unique Site Ref.[1]	No. of MPANs	MPAN	Consumption Month & Year	EDNOs LLFC or DUoS Tariff ID[2]	Standing Charge Days	Red or Black or Super Red Units kWh	Amber or Yellow Units kWh	Green Units kWh	Charged Capacity kVA	Charged Excess Capacity kVA	Charged Reactive Units kVArh

[1] Where multi-MPANs are covered by the same invoice, the lead MPAN will always be on the first row which row will contain the data for the MPANs collectively, as described in Paragraph 3.5.

[2] Notwithstanding Paragraph 3.5, where multiple MPANs covered by the same invoice have different LLFC Ids or DUoS Tariff IDs, the LLFC Id or DUoS Tariff ID for each MPAN shall be identified separately in the applicable row.

SCHEDULE 20: PRODUCTION OF THE COST INFORMATION REVIEW PACK

1. INTRODUCTION

1.1 The purpose of this Schedule 20 is to set out the information to be provided to the Secretariat in accordance with Clause 35A.3 and 35A.4.

2. COST INFORMATION REVIEW PACK

2.1 The “Cost Information Review Pack” or “CIRP” is a document to be completed by each DNO Party outlining the applicable Use of System Charges (and other related cost information) pursuant to the Charging Methodology set out in Schedule 16 (the “CDCM”). The pack shall contain the information set out under Paragraph 2.2 of this Schedule 20. The latest version made available on the Website of the CIRP Template and templates for Table 1 and Table 2 referred to under Paragraph 2.2(a) and (b) shall be used for the purposes of providing the required information.

2.2 The CIRP published by each DNO Party will contain the following information:

a. populated copy of the table containing the same items as set out at Appendix A of this Schedule 20 detailing information relating to the DNO Party’s Allowed Revenue for Regulatory Year t-1 to Regulatory Year t+4 ("the Review Period"), calculated in line with the DNO Party’s Distribution Licence ("Table 1");

b. a populated copy of the table containing the same items as set out at Appendix B of this Schedule 20 detailing the sensitivities relating to the DNO Party’s Allowed Revenue, as determined by each DNO Party ("Table 2");

c. historical CDCM input information and forecasts of the CDCM inputs for the Review Period, which will (in each case) be provided in a spreadsheet format and contain the CDCM input sheets in a format that can be directly copied into the CDCM model;

d. CDCM tariffs and typical bills for Regulatory Year t-1 to Regulatory Year t+1 and forecasts for such tariffs and bills for Regulatory Year t+2 to Regulatory Year t+4;

e. functionality to allow users the ability to update the forecast CDCM inputs and view the resultant impact on Use of System Charges and typical bills;

f. forecast of the price index (PI) for each Regulatory Year of the Review Period (as applicable), and a link between that forecast and any of the CDCM inputs which the DNO Party believes relate to PI, so that users are able to update the PI forecast in such a way that it automatically updates the relevant CDCM inputs;

g. details of the expected time bands (as referred to in the CDCM model) that will be used in each year of the Review Period; and (h) a commentary on the forecast for each CDCM input via individual comments.

2.3 The forecast of the CDCM inputs for the Review Period will be provided by DNO Parties based on their own perception of how the CDCM input data may change over the Review Period. The format of the CIRP will be common, but the actual forecast will be specific to each DNO Party to allow that DNO Party flexibility to express its own views and to provide a realistic forecast.

2.4 It is acknowledged that:

a. in populating the CIRP, each DNO Party will make a number of assumptions;

b. the information set out in each CIRP is illustrative in nature, and is only intended as an indication of an expectation at a point in time; and

c. actual Use of System Charges may differ significantly from the indicative tariffs set out in the CIRP, including where there are material changes in the data and assumptions underlying the forecasts,

and, accordingly, although each DNO Party shall endeavour to ensure the accuracy of the information provided in the CIRP, no DNO Party (or its officers, employees or agents) will be liable for the accuracy of the information contained in the Cost Information Review Packs.

2.5 The estimates made by the DNO Party in completing the CIRP (including the illustrative tariffs) shall be based on such information as is reasonably available to the DNO Party at the time of such estimate (it being acknowledged that such estimates may be subject to revision from time to time).

2.6 Where a Change Proposal amends the CIRP Template or the templates for Table 1 or Table 2 referred to under Paragraph 2.2(a) and (b), the new versions of such templates shall be uploaded to the Website by the Secretariat within five Working Days of the change being approved.

3. GLOSSARY

3.1 In this Schedule 20 and in the CIRP, except where the context otherwise requires, the expressions in the left-hand column of the table below shall have the meanings given to them in the right-hand column.

3.2 Words and expressions used in this Schedule 20 or in the CIRP that are not otherwise defined in this Agreement or this Schedule shall have the meanings given to them in the DNO Party's Distribution Licence.

CDCM	means the Common Distribution Charging Methodology as set out in Schedule 16.
CDCM Revenue	means the revenue to be recovered from tariffs calculated under the CDCM.
CIRP Template	means the CIRP model template version 1 when issued by the Panel and as amended from time to time in accordance with the Change Control process.
EDCM & Certain Interconnector Revenue	means, at any time and in respect of a Regulatory Year, the DNO Party's reasonable estimate (at that time) of: a. the revenue to be recovered from tariffs calculated under the Charging Methodology set out in Schedule 17 or 18 (as applicable to the DNO Party); plus b. to the extent relevant, the revenue to be recovered from the DNO Party-to-DNO Party interconnector charges referred to in paragraph 23.4 of the methodology set out in Schedule 17 or 18 (as applicable).

APPENDIX A – TABLE 1

Table 1 shall contain the items and calculations described in the following table in accordance with paragraph 2.2(a) of this Schedule 20:

Item	Units	Constants	Formula Description
Allowed load related capex	£m 20/21 prices		FM1_A1
Allowed non-load related capex - asset replacement	£m 20/21 prices		FM1_A2
Allowed non-load related capex - other	£m 20/21 prices		FM1_A3
Allowed faults	£m 20/21 prices		FM1_A4
Allowed tree cutting	£m 20/21 prices		FM1_A5

Allowed 100% 'revenue pool' expenditure	£m 20/21 prices		FM1_A6
Allowed controllable opex	£m 20/21 prices		FM1_A7
Total RIIO-2 capitalisation rate allocation 1 allowances	**£m 20/21 prices**		**FM1_A = FM1_A1 + FM1_A2 + FM1_A3 + FM1_A4 + FM1_A5 + FM1_A6 + FM1_A7**
Actual load related capex	£m 20/21 prices	ALCt	FM1_B1
Actual non-load related capex - asset replacement	£m 20/21 prices	ANCAt	FM1_B2
Actual non-load related capex - other	£m 20/21 prices	ANCOt	FM1_B3
Actual faults	£m 20/21 prices	AFAt	FM1_B4
Actual tree cutting	£m 20/21 prices	ATCt	FM1_B5
Actual 100% ‘revenue pool’ expenditure	£m 20/21 prices	ARPt	FM1_B6
Actual controllable opex	£m 20/21 prices	ACOt	FM1_B7
Total actual expenditure in capitalisation rate allocation 1	**£m 20/21 prices**		**FM1_B = FM1_B1 + FM1_B2 + FM1_B3 + FM1_B4 + FM1_B5 + FM1_B6 + FM1_B7**
RIIO-2 Funding Adjustment Rate (often referred to as 'sharing factor')	**%**	**SF**	**SF**
Post-TIM totex Allocation 1	**£m 20/21 prices**		**FM1.1 = (FM1_B - FM1_A) x SF + FM1_A if FM1_B > 0 FM1.1 = FM1_A otherwise**
RIIO-2 allocation 1 Capitalisation rate	%		CR1
Fast Pot Allocation 1	**£m 20/21 prices**		**FM1 = (1 - CR1) x FM1.1**
Allowed load related capex	£m 20/21 prices		FM2_A1
Allowed non-load related capex - asset replacement	£m 20/21 prices		FM2_A2
Allowed non-load related capex - other	£m 20/21 prices		FM2_A3
Allowed faults	£m 20/21 prices		FM2_A4
Allowed tree cutting	£m 20/21 prices		FM2_A5
Allowed 100% 'revenue pool' expenditure	£m 20/21 prices		FM2_A6
Allowed controllable opex	£m 20/21 prices		FM2_A7
Total RIIO-2 capitalisation rate allocation 2 allowances	**£m 20/21 prices**		**FM2_A = FM2_A1 + FM2_A2 + FM2_A3 + FM2_A4 + FM2_A5 + FM2_A6 + FM2_A7**
Actual load related capex	£m 20/21 prices	ALCUt	FM2_B1
Actual non-load related capex - asset replacement	£m 20/21 prices	ANCAUt	FM2_B2
Actual non-load related capex – other	£m 20/21 prices	ANCOUt	FM2_B3
Actual faults	£m 20/21 prices	AFAUt	FM2_B4
Actual tree cutting	£m 20/21 prices	ATCUt	FM2_B5

Actual 100% ‘revenue pool’ expenditure	£m 20/21 prices	ARPUt	FM2_B6
Actual controllable opex	£m 20/21 prices	ACOUt	FM2_B7
Total actual expenditure in capitalisation rate allocation 2	**£m 20/21 prices**		**FM2_B = FM2_B1 + FM2_B2 + FM2_B3 + FM2_B4 + FM2_B5 + FM2_B6 + FM2_B7**
RIIO-2 Funding Adjustment Rate (often referred to as 'sharing factor')	**%**	**SF**	**SF**
Post-TIM totex Allocation 2	**£m 20/21 prices**		**FM2.1 = (FM2_B - FM2_A) x SF + FM2_A if FM2_B > 0 FM2.1 = FM2_A otherwise**
RIIO-2 allocation 2 Capitalisation rate	%		CR2
Fast Pot Allocation 2	£m 20/21 prices		FM2 = (1 - CR2) x FM2.1
Fast money	**£m 20/21 prices**	**FMt**	**FM = FM1 + FM2**
Post-vesting pre-RIIO depreciation	£m 20/21 prices		DPN1
RIIO-1 depreciation	£m 20/21 prices		DPN2
RIIO-2 depreciation	£m 20/21 prices		DPN3
Depreciation	**£m 20/21 prices**	**DPNt**	**DPN = DPN1 + DPN2 + DPN3**
Vanilla WACC	annual real %		RTN1
Single year discount factor	scalar		RTN2
Closing RAV	£m 20/21 prices		RTN3
Opening RAV (after transfers)	£m 20/21 prices		RTN4
Discounted closing RAV	£m 20/21 prices		RTN5
NPV-neutral RAV return base	£m 20/21 prices		RTN6
Return	**£m 20/21 prices**	**RTNt**	**RTN = RTN1 + RTN2 + RTN3 + RTN4 + RTN5 + RTN6**
Licence Fee Payments	£m 20/21 prices	LFt	PT1
Prescribed Rates	£m 20/21 prices	RBt	PT2
Pass-through Transmission Connection Point Charges	£m 20/21 prices	TBt	PT3
Smart Meter Communication Licensee Costs	£m 20/21 prices	SMCt	PT4
Smart Meter Information Technology Costs	£m 20/21 prices	SMITt	PT5
Ring Fence Costs	£m 20/21 prices	RFt	PT6
Supplier of Last Resort Net Costs	£m 20/21 prices	SLRt	PT7
Valid Bad Debt Claims	£m 20/21 prices	IBDAt	PT8
Pension Scheme Established Deficit repair expenditure	£m 20/21 prices	EDEt	PT9
Connection Reform Costs	£m 20/21 prices	CRt	PT10

Failed Supplier Recovered Costs	£m 20/21 prices	SRCt	PT11
Shetland Variable Energy Costs (SSEH only)	£m 20/21 prices	SECt	PT12
Assistance for high-cost distributors adjustment (SSEH only)	£m 20/21 prices	HBt	PT13
Pass-through	**£m 20/21 prices**	**PTt**	**PT = PT1 + PT2 + PT3 + PT4 + PT5 + PT6 + PT7 + PT8 + PT9 + PT10 - PT11 + PT12 - PT13**
Base Revenue	**£m 20/21 prices**		**A = FM + DPN + RTN + PT**
Return Adjustment (note: this row is not active. It will be linked to ReturnAdj for closeout)	**£m 20/21 prices**	**RTNAt**	**RTNA**
Equity issuance costs	**£m 20/21 prices**	**EICt**	**EIC**
Business plan incentive	**£m 20/21 prices**	**BPIt**	**BPI**
Time to connect ODI	£m 20/21 prices	TTCt	ODI1
Broad Measure of Customer Service ODI	£m 20/21 prices	BMCSt	ODI2
Interruptions incentive scheme ODI	£m 20/21 prices	IQt	ODI3
Major connections ODI	£m 20/21 prices	MCt	ODI4
Consumer Vulnerability ODI	£m 20/21 prices	CVIt	ODI5
Distribution System Operator ODI	£m 20/21 prices	DSOIt	ODI6
Dig, Fix and Go ODI (ENWL only)	£m 20/21 prices	DFGt	ODI7
Collaborative Streetworks ODI (EPN, LPN and SPN only)	£m 20/21 prices	CSWt	ODI8
Output delivery incentive	**£m 20/21 prices**	**ODIt**	**ODI = ODI1 + ODI2 + ODI3 + ODI4 + ODI5 + ODI6 + ODI7 + ODI8**
Other revenue allowances	**£m 20/21 prices**	**ORAt**	**ORA**
Directly Remunerated Services	**£m 20/21 prices**	**DRSt**	**DRS**
Calculated revenue (before tax)	**£m 20/21 prices**		**B = A + RTNA + EIC + BPI + ODI + ORA + DRS**
Tax allowance	**£m 20/21 prices**	**TAXt**	**TAX**
Tax allowance adjustment	**£m 20/21 prices**	**TAXAt**	**TAXA**
Calculated revenue	**£m 20/21 prices**		**R = B + TAX + TAXA**
Real to nominal prices conversion factor (splice index for RIIO-2)	scalar	PIt / PI2020-21	PIt / PI2020-21
Combined RPI-CPIH price index (financial year average) (aka Price Index term) PIt	scalar	PIt	PI
Calculated revenue	**£m nominal**	**Rt x PIt / PI2020/21**	**C = R x Pit / PI2020/21**
Correction term	£m nominal	Kt	K
Forecasting penalty	£m nominal	FPt	FP
Legacy Allowed Revenue	£m nominal	LARt	LAR
Allowed revenue	**£m nominal**	**ARt (part C)**	**AR = C + K + FP + LAR**

Recovered Revenue	**£m nominal**	**RRt**	**RR**
Revenue under/(over) recovery	**£m nominal**		**D = AR - RR**
Vanilla weighted average cost of capital	annual real %	WACCt	WACC
Inflation (from year t to t+1)	annual %	PIt+1/PIt	E [= PIt+1/PIt]
Nominal time value of money	annual nominal %	TVMt	TVM = (1 + WACC) x (1 + E) - 1
Correction Term	**£m nominal**	**Kt**	**K [= Dt-1 + (1 + TVMt- 1)]**

APPENDIX B – TABLE 2

Table 2 shall contain the items and calculations described in the following table in accordance with paragraph 2.2(b) of this Schedule 20:

Item	Units	Constants	Formula Description
Forecast Calculated Revenue from Table 1	£m 20/21 prices		R
Tariffs set for year	drop-down		Y/N
Possible Changes To Calculated Revenue			
Description			
	£m 20/21 prices		A1
	£m 20/21 prices		A2
	£m 20/21 prices		A3
	£m 20/21 prices		A4
	£m 20/21 prices		A5
	£m 20/21 prices		A6
	£m 20/21 prices		A7
	£m 20/21 prices		A8
	£m 20/21 prices		A9
	£m 20/21 prices		A10
Total - Potential Change in Calculated Revenue	**£m 20/21 prices**		**A11 = Sum (A1:A10)**
Calculated Revenue including Possible Changes Above	**£m 20/21 prices**		**RA = R + A11**
Real to nominal prices conversion factor (splice index for RIIO-2)	scalar	PIt / PI202021	PIt / PI2020-21
Combined RPI-CPIH price index (financial year average) (aka Price Index term)	scalar	PIt	PI
Calculated Revenue Including Possible Changes	£m nominal	Rt x PIt / PI2020/21	CA = RA x PIt / PI2020-21
Correction term	£m nominal	Kt	KA
Forecasting penalty	£m nominal	FPt	FP
Legacy Allowed Revenue	£m nominal	LARt	LAR
Allowed Revenue Including Possible Changes	**£m nominal**	**ARt (part C)**	**ARA1 = CA + KA + FP + LAR**
Recovered Revenue Including Possible Changes	**£m nominal**	**RRt**	**RRA1**
Revenue under/(over) recovery Including Possible Changes	**£m nominal**		**D = ARA1 - RRA1**
Vanilla weighted average cost of capital	annual real %	WACCt	WACC
Inflation (from year t to t+1)	annual %	PIt+1/PIt	E [= PIt+1/PIt]
Nominal time value of money	annual nominal %	TVMt	TVM = (1 + WACC) x (1 + E) - 1
Correction Term Including Possible Changes	**£m nominal**	**Kt**	**KA = Dt-1 + (1 + TVMt-1)]**
Percentage change in inflation	% Change		P1

Allowed Revenue Including Possible Changes to Calculated Revenue and Inflation Change	£m nominal		ARA2 = ARA1 * (1 + P1)
Reduction In K for Inflation Change	£m nominal		KA1t = (ARA2t-1 - ARA1t-1) * (1 + TVMt-1)
New Allowed Revenue inc Inflation Change	**£m nominal**		**ARA3 = ARA2 + KA1**
Percentage change in Recovered Revenue	% Change		P2
Recovered Revenue including Possible Recovered Revenue Change	£m nominal		RR2 = RR1 * (1 + P2)
Reduction In K for Recovered Revenue Change	£m nominal		KA2t = (RR2t-1 - RR1t-1) * (1 + TVMt-1)
New Recovered Revenue inc Recovered Revenue Change	**£m nominal**		**RR3 = RR2 (tariffs set) or RR3 = ARA4 (tariffs not set)**
New Allowed Revenue inc Recovered Revenue Change	**£m nominal**		**ARA4 = ARA1 + KA2**

SCHEDULE 21: PORTFOLIO BILLING FOR NESTED NETWORKS

1. APPLICATION OF THIS SCHEDULE

1.1 Notwithstanding Clause 36.3, unless the Primary NDNO notifies the Secondary NDNO otherwise, this Schedule applies to, and is binding between, each Primary NDNO (for the one part) and each Secondary NDNO (for the second part).

1.2 This Schedule sets out the process for determining the data by reference to which the Use of System Charges payable by the Secondary NDNO to the Primary NDNO are to be calculated in respect of Nested Networks.

1.3 In this Schedule, unless the context otherwise requires:

Embedded Network	means the Distribution System of an EDNO (as defined in Schedule 19 (Portfolio Billing)).
NDNO	means any DNO/IDNO Party whose Distribution System forms part of a Nested Network.
Nested Network	means, where there are one or more Distribution Systems connected downstream of an Embedded Network, the Embedded Network and each of those Distribution Systems.
Primary NDNO	means any NDNO that has installed assets that change the network level (as defined in Schedule 16 (Common Distribution Charging Methodology)).
Secondary NDNO	means any NDNO whose Distribution System forms part of a Nested Network connected downstream from the Primary NDNO.

1.4 In this Schedule, a reference to the Secondary NDNO's “Connectees” shall only be a reference to those Connectees to the Distribution Systems referred to in Paragraph 1.3 (e) (and shall not include any Connectees to other Distribution Systems of the Secondary NDNO).

1.5 The Use of System Charges calculated in accordance with this Schedule shall be payable by the Secondary NDNO in accordance with Clause 44, and shall be subject to Clause 43.7 and paragraph 2 of Schedule 4 (as if the references to the User in those Clauses and that Schedule were to the Secondary NDNO and references to the Company in those Clauses and that Schedule were to the Primary NDNO).

2. AGGREGATED DATA

2.1 In order to calculate the Use of System Charges attributable to a Secondary NDNO's aggregated settled Connectees, the Primary NDNO will use data contained in the report provided by the Secondary NDNO pursuant to Paragraph 2.3 (subject to any revisions to reflect errors in such reports identified by the Primary NDNO pursuant to Paragraph 5).

2.2 The Secondary NDNO shall provide a report to each Primary NDNO, within 5 Working Days of receiving relevant consumption data for the aggregated Connectees on the Secondary NDNO's Distribution System that are connected (either directly or indirectly via another NDNO's Distribution System) to the Primary NDNO's Distribution System, including all relevant data not previously reported to the Primary NDNO (and any adjustments to data previously reported).

2.3 The report shall be derived from the Use of System Charge received from the DNO Party as a consequence of the data provided to the DNO Party under paragraph 2 of Schedule 19 and shall contain the following data items in the following sequence in respect of aggregated Connectees:

a. the Market Domain I.D. or (for MHHS) the Market Participant ID of the Secondary NDNO;

b. the GSP Group code of the DNO Party;

c. the name or other reference identifying the Secondary NDNO Distribution System;

d. the month of consumption covered by the report;

e. the voltage at which the Secondary NDNO's Distribution System is connected to the Primary NDNO's Distribution System (or any other Distribution System forming part of the same Nested Network); and

f. for each Settlement Run the:

i. Settlement Class (comprising Line Loss Factor Class Id, Profile Class, Standard Settlement Configuration Id and the Time Pattern Regime) or (for MHHS) the DUoS Tariff ID;

ii. Settlement Class MSiD Count or Daily Tariff Number of MSIDs, as applicable (for each Primary NDNO); and

iii. Settlement Class Unit Count or Daily Uncorrected Volume for Charge Band, as applicable (this being the average number of units for that Settlement Class or DUoS Tariff ID, as applicable multiplied by the Settlement Class MSiD Count or Daily Tariff Number of MSIDs, as applicable, for each Primary NDNO);

and where there are no billable aggregated Connectees a nil return shall be provided.

2.4 The report referred to in Paragraph 2.3 shall be provided in Excel 2003 format with each data item in a separate column.

3. SITE SPECIFIC DATA

3.1 In order to calculate the Use of System Charges attributable to a Secondary NDNO's site specific settled Connectees, the Primary NDNO will use data contained in the report provided by the Secondary NDNO pursuant to Paragraph 3.2 (subject to any revisions to reflect errors in such reports identified by the Primary NDNO pursuant to Paragraph 5).

3.2 The Secondary NDNO shall provide a report, in the same data format as that referred to in paragraph 3.3 of Schedule 1, to each Primary NDNO, on or before the 15th day of each month, based on the amounts invoiced to Supplier/CVA Registrants by the Secondary NDNO pursuant to Clause 21 in respect of its Connectees on the Secondary NDNO's Distribution System that are connected (either directly or indirectly via another NDNO's Distribution System) to the Primary NDNO's Distribution System, including all relevant data not previously reported to the Primary NDNO (and any adjustments to data previously reported).

3.3 The report referred to in Paragraph 3.2 shall be provided in Excel 2003 format with each data item in a separate column.

4. MPAN REPORT

4.1 On or before the 15th day of each month, the Secondary NDNO shall send to the Primary EDNO a list of the Secondary NDNO's MPANs for site specific settled Connectees (including pseudo site specific metered UMS), together with (in a separate column) the trading status, energisation status and their effective from dates for each MPAN as at the start of that month.

5. AUDIT

5.1 Upon not less than 15 Working Days' prior written notice, the Primary NDNO shall have the right to inspect and audit the consumption data and billing records of the Secondary NDNO relating to the invoices referred to in Paragraph 2 and Paragraph 3 or to check the accuracy of the LLFC Id or (for MHHS) the DUoS Tariff ID determination under Paragraph 6.4. The Secondary NDNO shall ensure that all such data and billing records are maintained in accordance with customary record keeping and accounting standards.

5.2 The Primary NDNO shall only be entitled to exercise such right for the purposes of verifying the accuracy and completeness of the reports provided under Paragraph 2 and Paragraph 3 or to check the LLFC Id or (for MHHS) the DUoS Tariff ID determination under Paragraph 6.4 and shall only use the data obtained for those purposes.

5.3 The Secondary NDNO will allow the duly authorised representatives and auditors of the Primary NDNO who are to undertake any inspection or audit in accordance with this Paragraph 5, all reasonable assistance and adequate facilities for the proper exercise of such inspection or audit.

6. LINE LOSS FACTOR CLASS OR DUOS TARIFF ID

6.1 Subject to paragraph 6.4, the Primary EDNO shall use the Secondary NDNO's LLFC Id description contained in Market Domain Data or the Secondary NDNO’s DUoS Tariff ID contained in Industry Standing Data (each as defined in the BSC) to enable the Primary NDNO to identify the voltage of connection of the Secondary NDNO's Connectees and shall use the report outlined in Paragraph 2.3 to identify the voltage of the connection of the Secondary NDNO's Distribution System to the Primary NDNO's Distribution System, and shall notify the Secondary NDNO which of the Primary NDNO's charges will be applied by the Primary NDNO in respect of each Connectee for the purposes of the Use of System Charges the Primary NDNO levies on the Secondary NDNO.

6.2 Where the Secondary NDNO introduces new LLFC Ids or changes the use of existing LLFC Ids or DUoS Tariff IDs, it shall (within 15 Working Days of the same being published in the Market Domain Data or in the Industry Standing Data) notify the Primary NDNO of the new or changed LLFC Id or DUoS Tariff IDs.

6.3 Where the Secondary NDNO has introduced new or changed LLFC Ids or DUoS Tariff IDs, the Secondary NDNO shall notify the Primary NDNO which of the Primary NDNO's charges the Secondary NDNO believes should apply in respect of the affected Connectees. The Primary NDNO shall nevertheless apply the charges as it considers appropriate, but any dispute regarding invoices shall be determined in accordance with Schedule 4.

6.4 Where a Secondary NDNO has UMS Connectees, the Secondary NDNO shall apply a LLFC Id or DUoS Tariff ID that reflects the voltage of the Points of Connection on the Secondary NDNO's Distribution System (as referred to in Paragraph 1.3) that provide the majority (i.e. more than 50%) of energised domestic connections on that Distribution System. Where no Points of Connection provide the majority of energised domestic connections, the Secondary NDNO and Primary NDNO shall negotiate in good faith to determine the LLFC Id or DUoS Tariff ID that should most reasonably apply.

6.5 The LLFC Id or DUoS Tariff ID agreed pursuant to Paragraph 6.4 will be applied to the entire portfolio of UMS Connectees to the Secondary NDNOs Distribution System that are registered under the same Standard Settlement Configuration.

6.6 The Primary NDNO shall have the right to review the data provided to it by the Secondary DNO pursuant to Paragraph 2.1 for the purpose of verifying the accuracy of the LLFC Id or DUoS Tariff ID applied by the Secondary NDNO to its UMS Connectees.

7. NOTICES

7.1 The Secondary NDNO shall provide all reports and other information that it is required to provide to the Primary NDNO in accordance with this Schedule by email to an address specified to the Secondary NDNO by the Primary NDNO, as varied from time to time.

SCHEDULE 22: COMMON CONNECTION CHARGING METHODOLOGY

Introduction

1. This Schedule 22 sets out the Common Connection Charging Methodology (CCCM). The CCCM is the whole of this Schedule 22 excluding only this introductory section.

2. Each DNO Party is obliged by Standard Licence Condition 13 to have a connection charging methodology in force (each a **Connection Charging Methodology**). Each DNO Party is obliged by Standard Licence Condition 13 to include the CCCM within its Connection Charging Methodology.

3. The DNO Party will include within the document containing its Connection Charging Methodology other matters which are outside the scope of the CCCM.

4. The CCCM is split into two sections numbered '1' and '2', and refers to other sections of the document in which the CCCM is to be included. When each DNO Party includes the CCCM within the document containing its Connection Charging Methodology, the DNO Party shall replace such section numbering and cross-references with the section numbers and cross-references appropriate for its document.

5. Modifications to this Schedule 22 are governed by the provisions of this Agreement.

6. The glossary forming part of the CCCM contains definitions of terms and acronyms used in the CCCM. In the case of any conflict between the defined terms and acronyms set out in the CCCM (on the one hand) and the definitions and rules of interpretation set out in Clause 1 of this Agreement (on the other), the defined terms and acronyms set out in the CCCM shall prevail for the purposes of the CCCM.

Common Connection Charging Methodology

Section 1 – Common Connection Charging Methodology

This Section sets out the Common Connection Charging Methodology that is implemented to ensure a consistent approach in the way your Connection Charge is calculated.

1.

Minimum Scheme

1.1 The Minimum Scheme is the Scheme with the lowest overall capital cost (as estimated by us), solely to provide the Required Capacity. The Minimum Scheme will be subject to:

- accepted industry standards, including the requirements of the Distribution Code;
- the status and configuration of the Relevant Section of Network (RSN);
- the standard sizes and types of equipment currently used by us on our Distribution System which shall be reasonable in all the circumstances;
- maintaining our ability to minimise regulatory penalties associated with the Interruptions Incentive Scheme and the Guaranteed Standards of Performance; and
- where the Customer is an LDNO, maintaining the Customer's ability to minimise regulatory penalties associated with the Guaranteed Standards of Performance.

and shall be consistent with our statutory and licence obligations including the requirement to develop, maintain and operate an efficient, co-ordinated and economical electricity Distribution System.

1.2 We will make available our design policies and standards as appropriate.

1.3 Subject to paragraphs 1.4 and 1.7 below, we will calculate the Connection Charge based on the estimated costs of the Minimum Scheme.

1.4 In certain circumstances we may decide to design an Enhanced Scheme. This will include one or more of the following:

- additional assets not required as part of the Minimum Scheme;
- assets of a larger capacity than required by the Minimum Scheme;
- assets of a different specification than required by the Minimum Scheme.

1.5 If we decide to design an Enhanced Scheme, the Connection Charge that will apply will be the lower of the Connection Charge associated with the Minimum Scheme and the Connection Charge associated with the Enhanced Scheme.

1.6 The Connection Charge associated with the Enhanced Scheme will be calculated subject to the exclusion of costs of any additional assets not necessary for the provision of your connection.

1.7 We may recover the reasonable costs incurred, both direct and indirect, in providing a connection and may, where allowed by our Licence, apply a margin on some of those costs. The factors taken into account by us to calculate the Connection Charge will include, but are not limited to:

- industry standards governing the Distribution System;
- the Required Capacity;
- available capacity of the existing Distribution System;
- whether any necessary extension or Reinforcement of the existing Distribution System is by underground cable or overhead lines;
- whether any diversionary work is required as a result of the development and the required disconnection of any assets;
- the length of cable or line required;
- type of ground requiring excavation, the type and extent of reinstatement necessary (including New Roads and Street Works Act requirements and any other relevant legislation), and the need for road, bridge crossings etc;
- any Electrical Plant and civil costs required, allowing for any civil works undertaken by you with our agreement;
- the cost of installing communication equipment;
- the costs of installing system management equipment;
- the requirement to work outside of normal working hours;
- the costs of undertaking the design;
- the costs of securing wayleaves/easements for plant, cables or lines including any consents;
- the costs of securing suitable substation sites including any necessary Land Rights;
- any overhead line surveys required;
- the costs of public enquiries and environmental impact studies;
- charges for any other costs associated with the work on Sites of Special Scientific Interest (SSSI), railway lines etc; and
- any variations in respect of the actual costs that were reasonably incurred as specified in the Connection Offer.

Cost Allocation

1.8 The costs to be charged to you as a Connection Charge may be split into three categories:

- Costs for providing the connection which are to be paid in full by you (see paragraphs 1.10 to 1.16);
- Costs for providing the connection which are to be apportioned between you and us (see paragraphs 1.28 to 1.33); and
- Costs to be paid by you in respect of works that have previously been constructed or are committed and are used to provide the connection (see paragraph 1.34).

1.9 Some costs may be borne in full by us and will not be included in your Connection Charge (see paragraphs 1.35 to 1.39).

Costs to be paid in full by you

1.10 The costs of providing Extension Assets are charged in full to you.

1.11 Where you have requirements for additional security or the characteristics of your load requires us to install assets in excess of the Minimum Scheme then you will pay the costs in excess of the Minimum Scheme in full. Where you have requested a three-phase connection and/or a supply voltage that is not necessary to meet the Required Capacity, and the local Distribution System is not of the requested number of phases and/or voltage, then you will pay in full the cost of Reinforcement of the Distribution System to your specified number of phases and/or voltage.

1.12 The costs of the future operation and maintenance of any additional assets requested by you (over and above those associated with the Minimum Scheme) will be payable in full. This would normally be levied as a one-off charge representing the net present value of the future operation and maintenance costs and calculated as a percentage (specified in Section [6]) of the additional capital cost of the Scheme. See Example 7 for an illustration of where you request additional security.

1.13 Work required to reconfigure the Distribution System to meet your requirements where no additional Network or Fault Level Capacity is made available shall be charged in full to you. See Example 20.

1.14 Where the Extension Assets would normally require the extension of existing switchgear equipment and this is not possible, the cost of the full replacement of the switchgear (using the nearest standard size) will be charged to you, provided that there is no Reinforcement of the Distribution System (see paragraph 1.25).

1.15 If your development is considered to be speculative then the Reinforcement costs will be charged to you in full (see paragraphs 1.49 to 1.71).

1.16 Reinforcement costs for the Minimum Scheme in excess of the High-Cost Project Threshold, shall be charged to you in full as a Connection Charge. For the avoidance of doubt, where Paragraph 1.36 applies, the High-Cost Project Threshold will not apply. The calculation of this charge will include all costs for Reinforcement carried out at the same Voltage Level and one Voltage Level above the Point of Connection to the existing Distribution System. For Generation Connections the High-Cost Project Threshold is £200/kW; for Demand Connections the High-Cost Project Threshold is £1,720/kVA. Reinforcement costs up to and including the High-Cost Project Threshold will follow the methodology outlined under paragraphs 1.17 to 1.27. For Generation Connections, where the Reinforcement costs at the same Voltage Level as the Point of Connection are greater than the High-Cost Project Threshold then the methodology outlined under paragraphs 1.17 to 1.27 will be applied to Reinforcement costs up to and including the High-Cost Project Threshold only. The table below illustrates the application of the High-Cost Project Threshold.

England and Wales

	Voltage at the POC			
Voltage of Scheme Assets	**LV (at or below 1000V)**	**HV (above 1kV but not more than 22kV)**	**EHV (above 22kV but not more than 72kV)**	**132kV**
132kV Network	**Excluded from assessment[1]**	**Excluded from assessment[1]**	Included in assessment	Included in assessment
132kV/ EHV Substation	**Excluded from assessment[2]**	EHV CBs only included in assessment	Included in assessment	**Not applicable**
EHV Network	**Excluded from assessment[1]**	Included in assessment	Included in assessment	
132kV/ HV Substation	HV CBs only included in assessment	Included in assessment	**Not applicable**	
EHV/HV Substation	HV CBs only included in assessment	Included in assessment		
EHV/LV substation	Included in assessment	**Not applicable**		
HV Network	Included in assessment	Included in assessment		
HV/ LV Substation	Included in assessment	**Not applicable**		
LV Network	Included in assessment			

[1] Except where there is direct transformation from 132kV to HV or EHV to LV when the higher voltage costs are included.

[2] Except where there is direct transformation from 132kV to HV or EHV to LV when the higher voltage circuit breaker costs are included.

NB: The above table may not accommodate every possible set of circumstances, where this is the case, the Voltage Level (as defined in the Glossary) shall be applied.

Scotland

	Voltage at the POC		
Voltage of Scheme Assets	**LV (at or below 1000V)**	**HV (above 1kV but not more than 22kV)**	**EHV (above 22kV but not more than 72kV)**
EHV Network	**Excluded from assessment[1]**	Included in assessment	Included in assessment
EHV/HV Substation	HV CBs only included in assessment	Included in assessment	**Not applicable**
EHV/LV substation	Included in assessment	**Not applicable**	
HV Network	Included in assessment	Included in assessment	
HV/ LV Substation	Included in assessment	**Not applicable**	
LV Network	Included in assessment		

[1] Except where there is direct transformation from EHV to LV when the higher voltage costs are included.

NB: The above table may not accommodate every possible set of circumstances, where this is the case, the Voltage Level (as defined in the Glossary) shall be applied.

Costs of Reinforcement

1.17 Reinforcement is defined as assets installed that add capacity (network or fault level) to the existing shared use Distribution System.

1.18 For Generation Connections, where the Reinforcement is at the same Voltage Level as the voltage at the POC to the existing Distribution System, then the costs of Reinforcement shall be apportioned between you and us, unless other exceptions apply which take precedence. The methods used to apportion the costs of

Reinforcement are set out in paragraphs 1.28 – 1.33. Where the Reinforcement costs at the Voltage Level of the POC are greater than the High-Cost Project Threshold, then those Reinforcement costs, for each CAF, shall be scaled down by the ratio of the High-Cost Project Threshold to the total Reinforcement costs at the Voltage Level of the POC in accordance with the following formula (see Examples 32 and 33):

$$\text{Reinforcement cost} \times \frac{\text{High-Cost Project Threshold}}{\text{Total Reinforcement cost at the Voltage Level of the POC}}$$

1.19 For Demand Connections, the costs of Reinforcement will be paid in full by us, unless other exceptions apply which take precedence.

1.20 If you choose not to pay (i) Reinforcement costs for the Minimum Scheme for a Non-Curtailable Connection or (ii) Reinforcement costs in excess of the High-Cost Project Threshold for a Non-Curtailable Connection, then you can request an enduring Curtailable Connection instead (i.e. one which will not convert to a Non-Curtailable Connection in the future). If you subsequently require a Non-Curtailable Connection, then this would require a new connection request which may still be subject to Reinforcement costs, potentially in excess of the High-Cost Project Threshold.

1.21 Where one of the exceptions set out in paragraphs 1.22 to 1.27 applies, Reinforcement will be treated as Extension Assets and the costs of the Reinforcement will not be apportioned or paid in full by us. The application of the exceptions is demonstrated in the Examples.

1.22 Exception 1: Where the Reinforcement is:

- downstream of the POC; and
- over and above the Minimum Scheme; and
- provided at our request; and
- provided by connecting two points on the existing Distribution System,

then the apportionment rules will not apply. You will pay the costs associated with the Minimum Scheme and we will pay the costs over and above the Minimum Scheme. See Example 4.

1.23 Exception 2: Where the Reinforcement is in excess of the Minimum Scheme and is at your request, the Reinforcement will be treated as Extension Assets and the apportionment rules will not apply. The costs in excess of the Minimum Scheme will be borne in full by you (see paragraphs 1.11 and 1.12 above). See Example 3.

1.24 Exception 3: Where the Reinforcement is provided to accommodate a Temporary Connection the Reinforcement will be treated as Extension Assets and the apportionment rules will not apply. Consequently, in such circumstances, you will pay in full the costs associated with the Temporary Connection. Temporary Connections are defined as connections that are only required for a period of up to five years, but exclude connections to provide the initial connection to a development, where the Reinforcement will subsequently be required for the permanent connection.

1.25 Exception 4: Where the replacement of switchgear results in an increase in fault level capacity and:

- that increase is solely as a result of the fault level rating of the standard switchgear equipment used by us being higher than that of the existing switchgear; and
- that increase in fault level capacity is not needed to accommodate your connection.

then, unless the switchgear adds network capacity and the Security CAF applies, the switchgear replacement will be treated as Extension Assets and the apportionment rules will not apply. Consequently, in such circumstances, you will pay the full cost of the switchgear replacement. See Example 15.

1.26 Exception 5: Where the Minimum Scheme requires Reinforcement that is provided by connecting two points on the existing Distribution System to provide connectivity to your Premises, then the lowest cost feeder shall be treated as an Extension Asset and all other feeders required to connect your Premises shall be treated as Reinforcement. See Example 17.

1.27 Exception 6: Where the Reinforcement:

- is provided by connecting two points on the existing Distribution System; and
- is providing connection to a development with a number of Entry/ Exit Points,

then the additional network length (measured from suitable points close to the site boundaries which would allow for a clear demarcation of Contestable and Non-Contestable Work) required to provide connectivity within the development will be considered to be Extension Assets and the apportionment rules will not apply. Consequently, in such circumstances, you will pay the full cost of the additional network length. See Example 18.

Costs to be apportioned between you and us

1.28 The costs of Reinforcement will be apportioned using one of two Cost Apportionment Factors (CAFs), dependent upon which factor is driving the requirement for Reinforcement:

- The 'Security CAF'; and
- The 'Fault Level CAF'.

1.29 The following definitions are used in the application of the CAFs.

Existing Capacity	For existing Customers their Existing Capacity will be either: a. the Maximum Capacity used in the calculation of their use of system charges; or b. for Customers who are not charged for use of system on the basis of their Maximum Capacity the lower of: ◦ No. of phases x nominal phase-neutral voltage (kV) x fuse rating (A); and ◦ The rating of the service equipment.
Fault Level Contribution from Connection	is the assessment of the Fault Level contribution from the equipment to be connected taking account of its impact at the appropriate point on the Distribution System. Where an existing Customer requests a change to a connection then the ''Fault Level Contribution from Connection'' is defined as the incremental increase in Fault Level caused by the Customer.
New Fault Level Capacity	is the Fault Level rating, following Reinforcement, of the equipment installed after taking account of any restrictions imposed by the local network Fault Level capacity. For the avoidance of doubt this rule will be used for all equipment types and voltages.
New Network Capacity	is either the secure or non-secure capacity of the Relevant Section of Network (RSN) following Reinforcement. Whether secure or non-secure capacity is applicable depends upon the type of capacity that can be provided from the RSN. For example, if the capacity provided to the Customer by the RSN is secure, but the capacity requested by the Customer at the point of connection is non-secure, the secure capacity will be used. See Example 24. The capacity to be used will be based on our assessment of the thermal ratings, voltage change and upstream restrictions and compliance with our relevant design, planning and security of supply policies. The equipment ratings to be used are the appropriate operational rating at the time of the most onerous operational conditions taking account of seasonal ratings and demand.
Relevant Section of Network (RSN)	is that part or parts of the Distribution System which require(s) Reinforcement. Normally this will comprise: • the existing assets, at the Voltage Level that is being reinforced, that would have been used to supply you (so far as they have not been replaced) had sufficient capacity been available to connect you without Reinforcement; and/or • the new assets, at the same Voltage Level, that are to be provided by way of Reinforcement. Where it is unclear what assets would have supplied the Customer in the event that sufficient capacity had been available, the existing individual assets with the closest rating to the new assets will be used. There may be more than one RSN (e.g. at different Voltage Levels).

Required Capacity	is the Maximum Capacity agreed with the Customer. In the case of multiple connections (e.g. a housing development) it may be adjusted after consideration of the effects of diversity. Where an existing Customer requests an increase in capacity then it is the increase above their Existing Capacity.

1.30 The 'Security CAF' is applied, where the costs are driven by either thermal capacity or voltage (or both) as assessed against the relevant standard. This rule determines the proportion of the Reinforcement costs that should be paid by you as detailed below.

$$SecurityCAF = \frac{RequiredCapacity}{NewNetworkCapacity} \times 100\% \quad (max 100\%)$$

1.31 The 'Fault Level CAF' is applied, where the costs are driven by Fault Level restrictions. This rule determines the proportion of the Reinforcement costs that should be paid by you as detailed below.

$$FaultLevelCAF = 3 \times \frac{FaultLevelContributionFromConnection}{NewFaultLevelCapacity} \times 100\% \ (max 100\%)$$

1.32 For clarity, where you require an augmentation to an existing connection, both the Security and Fault Level CAFs will be based on the increase in Required Capacity and increase in Fault Level Contribution from the connection respectively. Any related increases within the previous three year period will be taken into account in determining the increase in the Required Capacity or increase in the Fault Level Contribution from the connection to be applied within the CAF.

1.33 On some Schemes there may be interaction between the two rules. In such cases, the 'Security' CAF will be applied to costs that are driven by the security requirement. The 'Fault Level CAF' will be applied to costs that are driven by Fault Level requirements. See the Examples for illustrations on the application of the CAFs.

Recovery of costs for previous works

1.34 Where, in order to provide your connection;

- we propose to utilise existing Distribution System assets that were previously installed to provide a connection to another customer, and
- the other customer has paid us (either in part or in full) a Connection Charge for those assets or paid an ICP for those assets which were adopted by us,

you may be required to make a payment towards them. The ECCR prescribes the circumstances where such payment is required. Charges for such works only apply where the new connection is provided within the ECCR Prescribed Period.

Costs to be paid in full by us

1.35 For Demand Connections we will fully fund all Reinforcement. For Generation Connections, we will fully fund Reinforcement carried out at a Voltage Level higher than the Voltage Level at the POC to the existing

Distribution System. However, there are exceptions to these two approaches, as set out elsewhere in this methodology.

1.36 We will fully fund Reinforcement carried out to allow the installation of all equipment at an existing Premises which remain connected via an existing low-voltage single, two or three phase service fused at 100 amperes or less per phase which is metered with whole-current metering; provided that (to the extent relevant):

- the Reinforcement is carried out to allow the installation of equipment as part of a single application for a single or multiple installations;
- any and all electricity generation equipment installed has a rated output not greater than 16 amperes per phase (or not greater than 16 amperes per phase at any single Premises if a single application for multiple installations);
- any and all equipment installed which does not constitute a modification to the existing service conforms with the technical requirements of the following standards (notwithstanding that the equipment may have an input current that is more than 16 amperes per phase):
    - BS EN 61000-3-2 Electromagnetic compatibility (EMC). Limits. Limits for harmonic current emissions (equipment input current ≤ 16 A per phase); and
    - BS EN 61000-3-3 Electromagnetic compatibility (EMC). Limits. Limitation of voltage changes, voltage fluctuations and flicker in public low-voltage supply systems, for equipment with rated current ≤ 16 A per phase and not subject to conditional connection.

1.37 Where it is necessary to modify a low-voltage single phase looped service for an existing Premises, this shall be considered to have remained connected under paragraph 1.36 above.

1.38 Where another LDNO with a distribution network that is connected to our Distribution System requires an increase in capacity to its distribution network, the voltage at the POC for assessing the Voltage Level will be:

- in the case of a new extension to the network of the other LDNO, the voltage of connection at which the Extension Assets will connect to the other LDNO's network; or
- in the case of additional capacity required in respect of a customer connected to the existing assets of the LDNO, the voltage at which the customer connects to the LDNO's network; or
- in the case of additional capacity required to meet general load growth on the LDNO's network then the Reinforcement costs will be borne by us. The LDNO will be required to provide justification in such circumstances.

1.39 The tables below illustrate the application of the voltage rules in relation to Reinforcement for Demand Connections and Generation Connections. For Generation Connections, you will be required to contribute towards the cost of any Reinforcement provided at the Voltage Level of the POC, up to and including the cost of circuit breakers provided at that voltage.

England and Wales

Demand Connections				
	Voltage at the POC			
Voltage of Scheme Assets	**LV (at or below 1000V)**	**HV (above 1kV but not more than 22kV)**	**EHV (above 22kV but not more than 72kV)**	**132kV**
132kV Network	We fund	We fund	We fund	We fund
132kV/ EHV Substation	We fund	We fund	We fund	Not applicable
EHV Network	We fund	We fund	We fund	Not applicable

132kV/ HV Substation	We fund	We fund	Not applicable	Not applicable
EHV/HV Substation	We fund	We fund	Not applicable	Not applicable
EHV/LV substation	We fund	Not applicable	Not applicable	Not applicable
HV Network	We fund	We fund	Not applicable	Not applicable
HV/ LV Substation	We fund	Not applicable	Not applicable	Not applicable
LV Network	We fund	Not applicable	Not applicable	Not applicable

NB: The above table may not accommodate every possible circumstance, where this is the case, the Voltage Level (as defined in the Glossary) shall be applied.

Generation Connections				
	Voltage at the POC			
Voltage of Scheme Assets	**LV** **(at or below 1000V)**	**HV** **(above 1kV but not more than 22kV)**	**EHV** **(above 22kV but not more than 72kV)**	**132kV**
132kV Network	We fund	We fund	We fund	Apportioned
132kV/ EHV Substation	We fund	We fund	EHV circuit breakers only Apportioned	Not applicable
EHV Network	We fund	We fund	Apportioned	Not applicable
132kV/ HV Substation	We fund	HV circuit breakers only Apportioned	Not applicable	Not applicable
EHV/HV Substation	We fund	HV circuit breakers only Apportioned	Not applicable	Not applicable
EHV/LV Substation	LV board only Apportioned	Not applicable	Not applicable	Not applicable
HV Network	We fund	Apportioned	Not applicable	Not applicable
HV/ LV Substation	LV board only Apportioned	Not applicable	Not applicable	Not applicable
LV Network	Apportioned	Not applicable	Not applicable	Not applicable

NB: The above table may not accommodate every possible circumstance, where this is the case, the Voltage Level (as defined in the Glossary) shall be applied.

Scotland

Demand Connections			
	Voltage at the POC		
Voltage of Scheme Assets	**LV** **(at or below 1000V)**	**HV** **(above 1kV but not more than 22kV)**	**EHV** **(above 22kV but not more than 72kV)**
EHV Network	We fund	We fund	We fund
EHV/HV Substation	We fund	We fund	Not applicable
EHV/LV substation	We fund	Not applicable	Not applicable
HV Network	We fund	We fund	Not applicable
HV/ LV Substation	We fund	Not applicable	Not applicable
LV Network	We fund	Not applicable	Not applicable

NB: The above table may not accommodate every possible circumstance, where this is the case, the Voltage Level (as defined in the Glossary) shall be applied.

Generation Connections			
	Voltage at the POC		
Voltage of Scheme Assets	**LV (at or below 1000V)**	**HV (above 1kV but not more than 22kV)**	**EHV (above 22kV but not more than 72kV)**
EHV Network	We fund	We fund	Apportioned
EHV/HV Substation	We fund	HV circuit breakers only Apportioned	Not applicable
EHV/LV Substation	LV board only Apportioned	Not applicable	Not applicable
HV Network	We fund	Apportioned	Not applicable
HV/ LV Substation	LV board only Apportioned	Not applicable	Not applicable
LV Network	Apportioned	Not applicable	Not applicable

NB: The above table may not accommodate every possible circumstance, where this is the case, the Voltage Level (as defined in the Glossary) shall be applied.

Additional Cost Allocation for Flexible Connections and Curtailable Connections

1.40 To facilitate the provision of a Flexible Connection or a Curtailable Connection, we may need to install and maintain specific system management equipment, at your Premises and/or further upstream in other parts of the Distribution System. Some of the costs associated with installing, operating and maintaining the system management equipment will be directly attributed to your connection and be included as part of your Connection Charge (see illustrative table in paragraph 1.41). The proportion of the costs which you must fund depends on whether your connection forms part of a Dedicated Scheme or a Wide Area Scheme, as described below:

Type 1 – Dedicated Scheme: A scheme managing constraint(s) where there are no customers downstream of the constraint(s) who could connect new or additional demand or generation without being controlled by the Dedicated Scheme:

- Type ‘1A’ considers a scenario involving only one customer; and
- Type ‘1B’ considers a scenario involving multiple customers.

Type 2 – Wide Area Scheme: A scheme managing constraint(s) where there are customers downstream of the constraint(s) who could connect new or additional demand or generation without being controlled by the Wide Area Scheme.

1.41 The table below illustrates the scheme types and methodology for cost recovery associated with each type of Flexible Connection or a Curtailable Connection. The methodology covers Type 1A, Type 1B and Type 2 (as each is described in paragraph 1.40).

Typical connection components[1]	**Type 1A - Single**	**Type 1B - Multiple**	**Type 2 - Wide Area**
Extension Assets for customer	You fund	You fund	You fund
End user control unit for the customer	You fund	You fund	You fund
Local system management unit	You fund	Shared equally between participants	We fund
Scheme management unit	You fund	Shared equally between participants	We fund
Central management unit	N/A	N/A	We fund
Scheme specific ongoing costs e.g. communications	We fund	We fund	We fund

[1]We will describe the main connection components within the relevant connection offer, which will also include the funding arrangements for each such connection component (if different to that stated in this illustrative table).

Recovered Equipment and Deferment of Asset Replacement

1.42 Normally, you will not receive any credit for the value of any equipment recovered by us as a result of providing the connection. However, where a Temporary Connection is to be Disconnected, we will determine the value of recovered equipment that we can subsequently reuse (net of depreciation and removal and refurbishment costs). Where there is a net value in the recovered equipment that can be reused, we will pay you the amount of such net value subject to a de minimis level as specified in Section [6].

1.43 You will not receive any credit for the value of any deferment of asset renewal expenditure by us.

Rebates

1.44 For Distribution System assets where you have paid in full, then you may be entitled to a reimbursement payment under the ECCR should another Customer connect to those assets. These circumstances are detailed in the ECCR.

1.45 For Distribution System assets where you have paid in proportion to your Required Capacity, then you are not entitled to a future rebate of charges should another Customer connect to those assets.

1.46 Your entitlement to receive payments under the ECCR only applies to connections made within the ECCR Prescribed Period from the first provision of the connection.

1.47 These provisions do not apply where your connection was made before 6 April 2017 and we have adopted the assets from an ICP. However, for connections made on or after 6 April 2017, these provisions do apply to assets we have adopted from an ICP (as further described in the ECCR).

Speculative Developments

1.48 Developments which have one or more of the following characteristics may be considered as speculative:

- their detailed electrical load requirements are not known;
- the development is phased over a period of time and the timing of the phases is unclear;
- the capacity requested caters for future expansion rather than the immediate requirements of (an) end user(s);
- the capacity requested caters for future speculative phases of a development rather than the initial phase(s) of the development; or
- the infrastructure only is being provided, with no connections for end users requested.

1.49 Where we are asked to provide a connection to a speculative development then the cost of the work including any Reinforcement is charged in full and the CAFs do not apply. Additional charges to reflect ongoing operation, repair and maintenance costs may also be levied.

1.50 We may, at our sole discretion, allow capacity to be reserved on the infrastructure provided to service the speculative development on the commercial terms agreed between you and us in respect of the development.

1.51 Applications will be assessed to determine whether they are a Speculative Development by using the Speculative Developments scoring system described in paragraphs 1.52-1.70, which will be applied as follows:

- Consideration will be given to the fact that some aspects of an application may have a greater bearing on whether the application should be considered as not being a Speculative Development. In recognition of this, the criteria used in the scoring system are weighted as either high or low significance.

- Only the points identified in the scoring criteria shall be placed against each respective criterion that is relevant to the application. Each high significance criterion shall be scored 2 points and each low significance criterion shall be scored 1 point, without exception.
- The number of points entered in the 'speculative' and 'non-speculative' columns shall be added up to give a total number for the respective column, as shown in the scoring proforma below.
- If the total value of points for the 'speculative' column is greater than the total value of points for the 'non-speculative' column, then the application will be considered as being a Speculative Development.
- If there is no score in either column, then we reserve the right to obtain additional information prior to making the assessment.
- All criteria may not apply to every application.

Scoring Proforma		
Criteria	**Non-Speculative Points**	**Speculative Points**
1		
2		
3		
4		Not applicable
5		
6		Not applicable
Total points		

Criterion 1: Programme (domestic and non-domestic developments)

1.52 This criterion is deemed to be of low significance.

1.53 The application will receive points in the 'non-speculative' column, if:

- the development has an overall timescale of up to two years from the date of the initial application is made until the completion of the final phase; or
- the applicant has provided a clear phasing plan for the complete development.

1.54 The application will receive points in the 'speculative' column, if:

- the development has an overall timescale of more than ten years from the date on which the initial application is made to completion of the final phase; and
- the applicant does not provide a clear phasing plan for the complete development.

1.55 Should the Customer's development be phased over a period greater than two years but less than or equal to ten years, then no points shall be entered in either the 'speculative' or 'non-speculative' columns.

Criterion 2: Programme (domestic developments only)

1.56 This criterion is deemed to be of high significance.

1.57 The application will receive points in the 'non-speculative' column if the complete development comprises less than 100 dwellings or requires less than three permanent HV/LV substations beyond the POC.

1.58 The application will receive points in the 'speculative' column, if the complete development includes more than 5,000 dwellings or requires more than ten permanent HV/LV substations beyond the POC.

1.59 Should the characteristics of the customers development fall between these two thresholds, then no points

shall be entered in either of the ‘speculative’ or ‘non-speculative’ columns.

Criterion 3: Load Profile

1.60 This criterion is deemed to be of high significance.

1.61 The application will receive points in the ‘non-speculative’ column if the application is for a development that is (or will become) a Phased Capacity Site.

1.62 The application will receive points in the ‘speculative’ column if the applicant does not provide an acceptable (to us) capacity ramp profile and a portion of the Required Capacity is for future expansion.

Criterion 4: Financial Commitment

1.63 This criterion is deemed to be of low significance.

1.64 The application will receive points in the ‘non-speculative’ column if the applicant makes a financial commitment in support of the application. A financial commitment is made where the applicant agrees to pay for:

- assets installed at initial connection which are sized sufficiently to accommodate the complete future development and which are greater than the assets to accommodate the capacity to be utilised in the early phases of construction; and
- any operation and maintenance costs for such increased assets which may be included within the connection offer prior to the initial energisation of the connection.

Criterion 5: Future Provision

1.65 This criterion is deemed to be of high significance.

1.66 The application will receive points in the ‘non-speculative’ column if at least 75% of the total connections and/or at least 75% of the total load are delivered in the first phase of the development (excluding any temporary works).

1.67 The application will receive points in the ‘speculative’ column if only infrastructure is being provided, with no connections for end users requested, and the development is not within the relevant local authority’s development plans.

Criterion 6: Planning Permission

1.68 The application will receive points in the ‘non-speculative’ column reflective of a high significance criterion if the complete development has achieved Full Planning Permission.

1.69 The application will receive points in the ‘non-speculative’ column reflective of a low significance criterion if the complete development has only achieved Outline Planning Permission.

1.70 For clarity, the absence of any planning permission/consent for the development will not result in any points being added to the ‘speculative’ column.

Connection Alterations

1.71 Where you request an alteration to your connection arrangements, including a change in the supply voltage, the costs are charged in full to you. For the avoidance of doubt increases in the Required Capacity are dealt with in accordance with the previous Sections.

Independent System Operator and Planner (ISOP) Charges

1.72 We have an obligation under the CUSC to discuss certain requests for connection or changes in connection with the ISOP. Such requests are typically for large electrical demand or generation projects. Under certain circumstances, as determined by the ISOP, they may apply charges to assess the potential impact on the GB Transmission System of a request or the combined effect of a number of requests and these will be included in the Connection Charge, or through a separate mechanism agreed between you and us.

1.73 Subsequent to such assessment, the ISOP may also require works to be undertaken on the GB Transmission System as a condition of the connection being permitted. In the event of ISOP applying charges for these works, we will reflect these charges in our charges to you.

1.74 Should GB Transmission System works be required, ISOP may apply a cancellation charge in the event that your project is cancelled or the capacity of your project reduces. The ISOP also calculates a secured amount in respect of this cancellation charge (being a percentage of the cancellation charge, which reduces at certain trigger points). We may ask you for security in respect of this cancellation charge, but we will not ask you for more than the secured amount calculated by the ISOP.

Land Rights

1.75 Where Land Rights are required from a third party, the cost of acquiring those rights will be included in either the Connection Charge to you or through a separate mechanism agreed between you and us.

1.76 If the Land Rights that we require cannot be obtained by negotiation, we may, following discussion with you, exercise our powers of compulsory purchase (Section 10 and Schedule 3 of the Act) or apply to the Secretary of State or the Scottish Government in Scotland for a ‘necessary wayleave’ (paragraphs 6-8 of Schedule 4 of the Act). If we do so, the costs that we incur, including those of the Lands Tribunal/ Lands Tribunal for Scotland (which determine issues of compensation) will be charged to you. The Lands Tribunal may award compensation to the landowner and/or anyone who holds an interest in the land and this will be included in the Connection Charge or through a separate mechanism agreed between you and us.

Unmetered Supplies

1.77 For some street lighting and other installations, we may allow items of equipment to be connected to our Distribution System without a meter. This is subject to the equipment having a low and predictable pattern of consumption and meeting the requirements of The Electricity (Unmetered Supply) Regulations 2001.

1.78 Where we agree that a meter is not required the provision of such a connection is dependent on the owner entering into an unmetered Connection Agreement and providing and maintaining an auditable inventory, in a format agreed with us, so that an accurate estimate of the consumption can be produced.

1.79 Where certain criteria are met the provision of services for unmetered connections may be made via a time-based connection service charge, e.g. Rent-a-Jointer Services. This is subject to us entering into a contract with you for the provision of such services.

1.80 You may elect to appoint an accredited ICP to carry out the Contestable Work for unmetered connections. The ICP will be allowed to carry out live jointing on low voltage, underground cables. Where you use an ICP, arrangements must first be established as follows:

- You will enter into an agreement with the ICP to carry out and complete the Contestable Work; and
- We will enter into an agreement and/or an Adoption Agreement with you and/or your appointed ICP as appropriate.

Capacity Ramping for LDNOs

1.81 For an LDNO the Required Capacity (expressed in kVA) is the Maximum Capacity to be provided at the boundary between the LDNO's distribution network and our Distribution System. This value will be agreed with us and stated in the Bilateral Connection Agreement for the relevant embedded network.

1.82 When a connection is provided to an LDNO the take-up of capacity may grow over a period of time as the site develops and individual customers are connected. In such circumstances the Bilateral Connection Agreement shall include a phased Required Capacity based on the Development Phase.

1.83 During the Development Phase a review may be undertaken annually on the anniversary of the Energisation of the embedded network. Any unused capacity identified in such review may be released for use by other customers and the Maximum Capacity reduced to an agreed level within the Bilateral Connection Agreement.

1.84 The Required Capacity agreed with us as being required at the end of the Development Phase shall be used to determine the Required Capacity for determination of the Cost Apportionment Factors where applicable.

1.85 Should additional capacity subsequently be required, the LDNO may incur additional Connection Charges for any Reinforcement based on the increase in capacity.

Phased Capacity Site

1.86 If a Customer has a requirement for capacity to increase over a period of time, then a phased Required Capacity can be agreed. The phased Required Capacity will be documented in the Connection Agreement for the connection.

1.87 The DNO will use the phased Required Capacity to assess the needs of the Distribution System and what, if any, Reinforcement is required. Any Reinforcement will be charged in accordance with the Charging Methodology for a Demand Connection or Generation Connection, as appropriate.

1.88 The DNO will use the phased Required Capacity, updated in the Connection Agreement and as applicable at the relevant time, as the Maximum Capacity for the purposes of calculating the Customer's Use of System Charges.

1.89 By agreeing a phased Required Capacity, the Customer is committing to pay, from Energisation of the connection, Use of System Charges based upon the residual charging band allocated in accordance with DCUSA Schedule 32 (Residual Charging Bands) based on the Required Capacity for the complete development. For example, if the connection will be ramped from 1MVA to 5MVA over 10 years, the Customer is committing to pay Use of System Charges for a 5MVA connection in line with the ramped profile (i.e. when the capacity is ramped to 5MVA in year 10).

1.90 During the Development Phase a review may be undertaken annually on or around the anniversary of the date of Energisation of the connection. The results of that review will be discussed, and we may require reasonable changes to the phasing as a result of that review.

Disconnection and De-Energisation

1.91 If we either Disconnect or De-energise your Entry/ Exit Point:

- at the request of your Supplier; or
- due to a failure of your Supplier to comply with the terms of the DCUSA,

then the cost of such disconnection or De-energisation will be borne by your Supplier.

1.92 If we either Disconnect or De-energise your Entry/ Exit Point:

- at your request; or
- due to a failure by you to comply with the terms of your Connection Agreement,

then the cost of such disconnection or De-energisation will be borne by you.

1.93 On termination of your Connection Agreement, we retain the right to remove our Electrical Plant and Electric Lines and charge you if we do so. Apparatus which is not cost effective for us to recover (e.g. Electric Lines laid underground) will normally be made safe and left at the Premises, but if you require us to remove them, the cost of removal will be payable by you. All such apparatus will remain our property unless otherwise agreed in writing.

Adoption Payments

1.94 Where we adopt assets installed by an ICP we will not make any adoption payment in respect of those assets.

Competition in Connections

1.95 Where you choose to have any Contestable Work undertaken by an ICP, we levy CIC Charges associated with the design approval, inspection and adoption of the Contestable Works as set out in Section [6] and Section [7].

Worked Examples Illustrating the Application of the Connection Charging Methodology

The following Examples are to illustrate the application of the Connection Charging Methodology and are not intended to provide an accurate estimate of the charges for which a person would become liable in respect of the provision of a connection. The Examples do not necessarily represent the Minimum Scheme for a specific connection application or how we would classify a connection between what is a Demand Connection or Generation Connection. Where an example only applies to either Demand or Generation Connections, then this is identified in the Example title, otherwise the examples apply to both.

The figures quoted in the Examples are illustrative. Section [7] of this statement provides our charges and indicative costs to undertake various activities.

The Examples illustrate where we undertake both the Contestable and Non-Contestable Work. These costs will include the determination of the POC and assessment and design costs, though these are not explicitly identified in the Examples.

Where Contestable Work is undertaken by an ICP, we will apply CIC Charges for services associated with the Contestable Works which would cover activities including design approval, inspection and monitoring. The CIC Charges are not shown in the Examples. For the avoidance of doubt, in each Example, where an ICP undertakes the Contestable Work, our Connection Charge will include the cost of the Non-Contestable Work and the CIC Charges but exclude the cost of Contestable Work.

The Examples are generic and standard for all LDNOs, but they do not represent the network analysis and subsequent design solutions that would be completed for an actual connection scheme. The actual designs are subject to our

design policies.

For illustrative purposes only, the rated capacities of the Examples use 'kVA, MVA' and 'kW, MW' interchangeably.

Index of Examples

Example	Description	Purpose
1	A new connection at LV	To show Extension Assets are charged in full to the Customer.
2	A new connection at HV	To show LV and HV Extension Assets are charged in full to the Customer.
3	A new connection on a domestic housing development with interconnection requested by Customer	To illustrate Exception 2 where the interconnection is treated as Extension Assets and are charged in full to the Customer.
4	A new connection with interconnection requested by us.	To illustrate Exception 1 where LV and HV Extension Assets are charged in full to the Customer, but the interconnection is paid in full by us.
5	A new connection where the Minimum Scheme is a new substation teed onto the existing HV network.	Simple example of a commercial connection, Extension Assets only, so charged in full to the Customer.
6	A new connection where the Minimum Scheme is a new substation looped into existing HV network.	Simple example of looped connection, Extension Assets only, so charged in full to the Customer.
7	A new connection where the Minimum Scheme is as for Example 5 but the Customer requests an enhanced connection arrangement where the substation is looped into existing HV network.	Shows that for a Customer requested Enhanced Scheme that the Customer pays costs above the Minimum Scheme plus O&M.
8	A new connection where the Minimum Scheme is as for Example 5 but we request an Enhanced Scheme where the substation is looped into the existing HV network.	Shows that for a DNO requested Enhanced Scheme that the DNO pays for all costs above Minimum Scheme.
9	An additional load application requiring a new connection from the HV network and Reinforcement.	To demonstrate the treatment of Reinforcement cost for a Demand Connection that drives Reinforcement.
10	A new connection that results in a Point of Connection further away than the nearest network.	To show that the Minimum Scheme may result in a Point of Connection that is further away than the nearest network and may result in increased Extension Asset costs that are charged in full to the Customer.
11	A new Generation Connection with capacity triggered Reinforcement.	To demonstrate the treatment of Reinforcement cost for a Generation Connection which drives Reinforcement using the Security CAF.
12	A new Generation Connection with Fault Level Triggered Reinforcement.	To demonstrate how the Fault Level CAF calculation is applied.
13	A new Generation Connection that requires Reinforcement involving both Security and Fault Level CAFs.	To demonstrate Reinforcement charging principles for a Generation Connection where both Security CAF and Fault Level CAF are applicable.
14	A new Generation Connection with Reinforcement at a voltage above that of the Point of Connection.	To illustrate that a Generation Connection does not contribute to Reinforcement costs at a voltage level above the connection voltage.
15	New Generation Connection where switchgear extension is not possible and switchgear replacement is needed	Illustrate Exception 4, if switchgear extension not possible, then treated as Extension Assets and costs are charged in full to the Customer.
16	A new Storage Connection that triggers Reinforcement	To show that Storage, when not co-located with other demand, is treated as a Generation Connection for the purposes of charging and any Reinforcement at the same Voltage of the POC will be charged, irrespective of whether the Reinforcement is due to the import or the export.
17	A new connection that is connected by Reinforced assets	To demonstrate the application of Exception 5 where the Customer needs to pay for the assets that connect them to the existing network.
18	A new connection of a development	To demonstrate the application of Exception 6 where the Customer pays for assets within the site boundary.
19	A new connection with remote network Reinforcement	To show treatment where capacity is created on a different part of the network and a load transfer is required to allow the connection. Example again demonstrates which elements are Reinforcement and which are Extension Assets.
20	A new connection with load transfer	Variation to Example 19 where a load transfer is required to free up capacity, but no new capacity is created and demonstrates why elements become Extension Assets.
21	A new Generation Connection with an Enhanced Scheme at the DNO's request.	To show how the Security CAF calculation is applied where the DNO requests an Enhanced Scheme.
22	A new Generation Connection on a meshed HV distribution system requiring Reinforcement.	To show that a contribution is required where Reinforcement is carried out at the same voltage as the Point of Connection for a Generation Connection.

23	A non-secure Generation Connection with non-secure Reinforcement.	To show that a contribution is required where Reinforcement is carried out at the same voltage as the Point of Connection for a Generation Connection in relation to a non-secure system.
24	A new non-secure Generation Connection with secure Reinforcement.	To show the application of the apportionment rule where secure Reinforcement is provided but the connection for a Generation Connection is non-secure.
25	A new Generation Connection with voltage rise triggered Reinforcement.	To show that a Generation Connection pays for Reinforcement at the voltage level of connection based on the CAF.
26	A new Generation Connection with voltage rise triggered Reinforcement.	To show that if voltage rise Reinforcement is tailored so that just the amount of network is upgraded to meet the Customer requirements, the CAF is 100% for a Generation Connection.
27	A new Generation Connection with Fault Level Triggered Reinforcement and transmission works.	To show how the Fault Level CAF calculation is applied and how the cost of transmission works are treated for a Generation Connection.
28	A new Generation Connection with Fault Level triggered Reinforcement and transmission works.	To show the treatment of Reinforcement costs at more than one voltage level above the POC and the cost of transmission works for a Generation Connection.
29	A new Demand Connection that has Reinforcement above the High-Cost Project Threshold.	To show how the Demand High-Cost Project Threshold is applied.
30	A new Generation Connection that has Reinforcement above the High-Cost Project Threshold.	To show how a Generation Connection that triggers the Generation High-Cost Project Threshold is charged when the Reinforcement required is at the same voltage of connection.
31	The Customer requirements for supply characteristics are greater than the Minimum Scheme.	To illustrate that the Customer specifically requesting a three-phase connection, where the existing network is not of a sufficient number of phases, pays for any Reinforcement.
32	A new Generation Connection that has Reinforcement costs above the High-Cost Project Threshold at the Voltage Level of the POC (single asset to be cost apportioned).	To show how a Generation Connection that triggers the Generation High-Cost Project Threshold at the Voltage Level of the POC is charged when the Reinforcement required is for a single asset at the same Voltage Level of connection.
33	A new Generation Connection that has Reinforcement costs above the High-Cost Project Threshold at the Voltage Level of the POC (multiple assets to be cost apportioned).	To show how a Generation Connection that triggers the Generation High-Cost Project Threshold at the Voltage Level of the POC is charged when the Reinforcement required is for multiple assets at the same Voltage Level of connection.

Key to Illustrations

	Circuit Breaker (any voltage)
	Switch
	Transformer
	Joint on cable
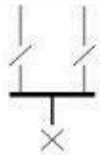	High voltage ring main unit
	Existing cable
	Proposed cable
	Normal Open Point (NOP)
	Generation Connection
	Demand Connection
	Point of Connection (POC)
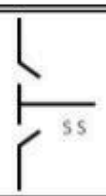	Sub Station

Example 1: A new connection at LV

Purpose: To show Extension Assets are charged in full to the Customer.

A Customer requests a LV single phase connection to a new house. The Premises can be connected to an existing LV main cable in the street.

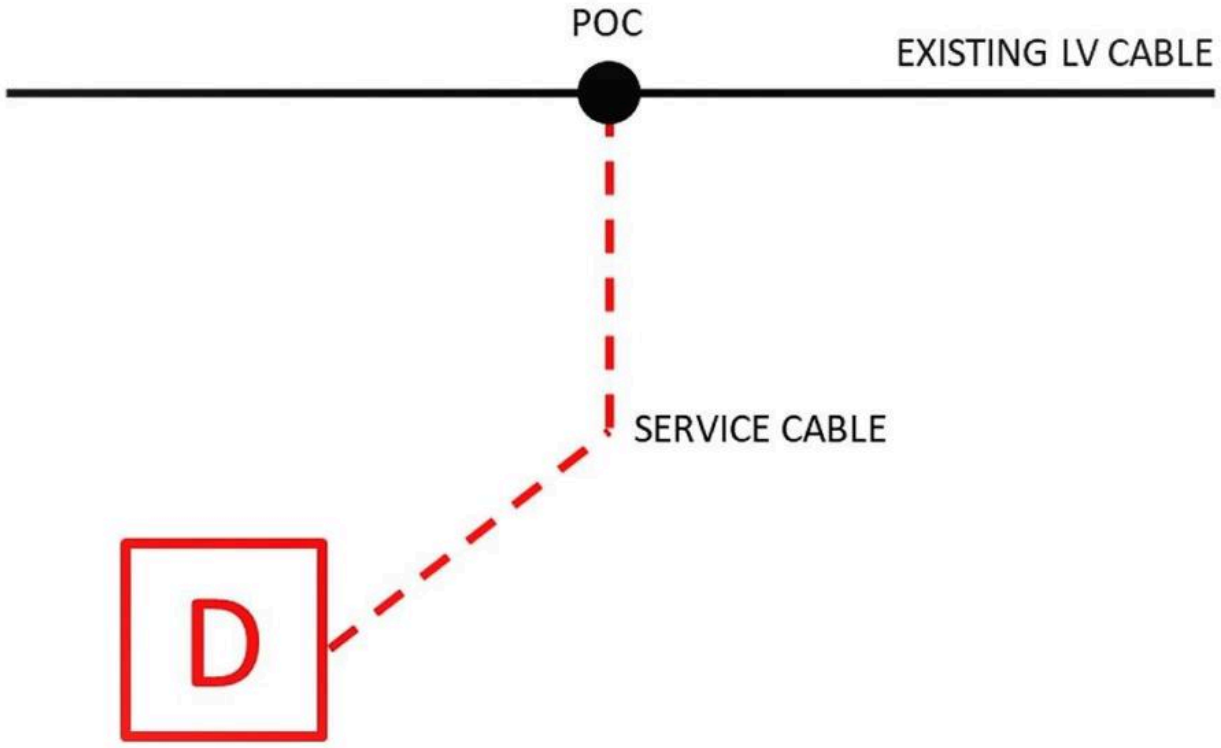

The Connection Charge for this Scheme is calculated as follows:

Extension Assets:	Cost	Apportionment	Customer Contribution
15m service cable, excavation in footpath for joint hole to Customer laid duct, backfill and termination	£1,600	n/a	£1,600
Single service breech joint	£300	n/a	£300
Total Extension Asset Cost	**£1,900**		**£1,900**

Total cost of the work = £1,900

Total Connection Charge to Customer = £1,900

Example 2: A new connection at HV

Purpose: To show LV and HV Extension Assets are charged in full to the Customer.

A housing developer requests connection for 200 domestic Premises. The Required Capacity to supply the 200 homes is 250kVA. A new distribution substation will be established to provide the Required Capacity of the site. The Minimum Scheme requires the substation to be looped into the existing 11kV network.

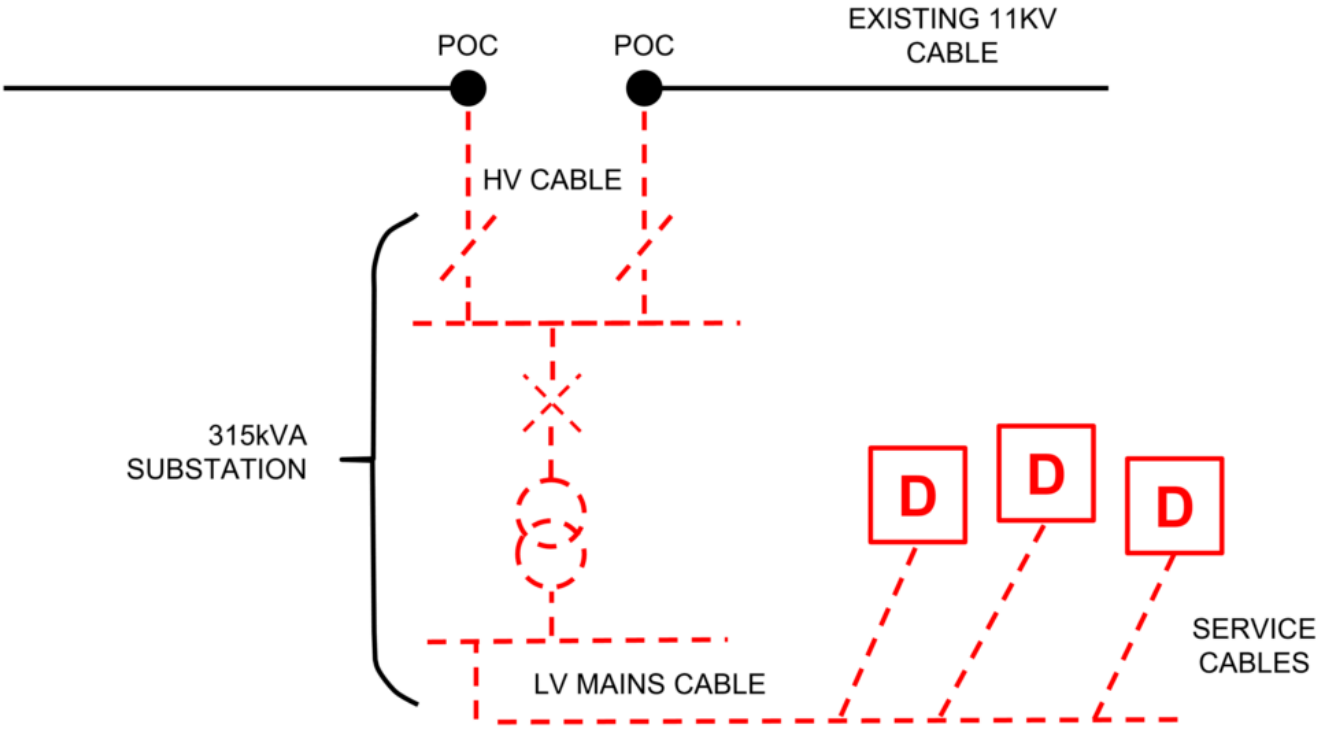

The Connection Charge for this Scheme is calculated as follows:

Extension Assets:	**Cost**	**Apportionment**	**Customer Contribution**
Provision and installation 100m 11kV cable	£30,000	n/a	£30,000
315kVA substation	£60,000	n/a	£60,000
LV mains, service cables and terminations	£200,000	n/a	£200,000
Two 11kV cable joints	£6,000	n/a	£6,000
Total Extension Asset Cost	**£296,000**		**£296,000**

Example 3: A new connection on a domestic housing development with interconnection requested by Customer

Purpose: To illustrate Exception 2 where the interconnection is treated as Extension Assets and are charged in full to the Customer.

As in Example 2, a housing developer requests connections for 200 domestic Premises. The Required Capacity to supply the 200 homes is 250kVA. A new distribution substation will be established to provide the Required Capacity of the site. The Minimum Scheme requires the substation to be looped into the existing 11kV network. However, in this example there is an option to provide an additional LV cable to interconnect the distribution substation with the existing LV network. This option is over and above the Minimum Scheme.

Interconnecting into the existing LV network will increase the capacity of the existing Distribution System. Therefore, the assets that connect the 11kV and LV network would normally be considered to be Reinforcement. These assets (as shown on the diagram below) include the 11kV cable, the 315kVA substation and the interconnecting LV main. They exclude the LV mains and service cables from the 315kVA substation to the Customer's development. However, whether these assets are to be considered Reinforcement or Extension Assets depends upon who requested the LV interconnection.

In this case Exception 2 (paragraph 1.23) applies as the LV interconnector is over and above the minimum scheme and requested by the Customer, therefore all assets (including the interconnecting LV cable) will be treated as Extension Assets and their costs will be borne in full by the Customer. As the interconnecting LV main and associated LV joint are over and above the Minimum Scheme, a charge for their future operation and maintenance will be made.

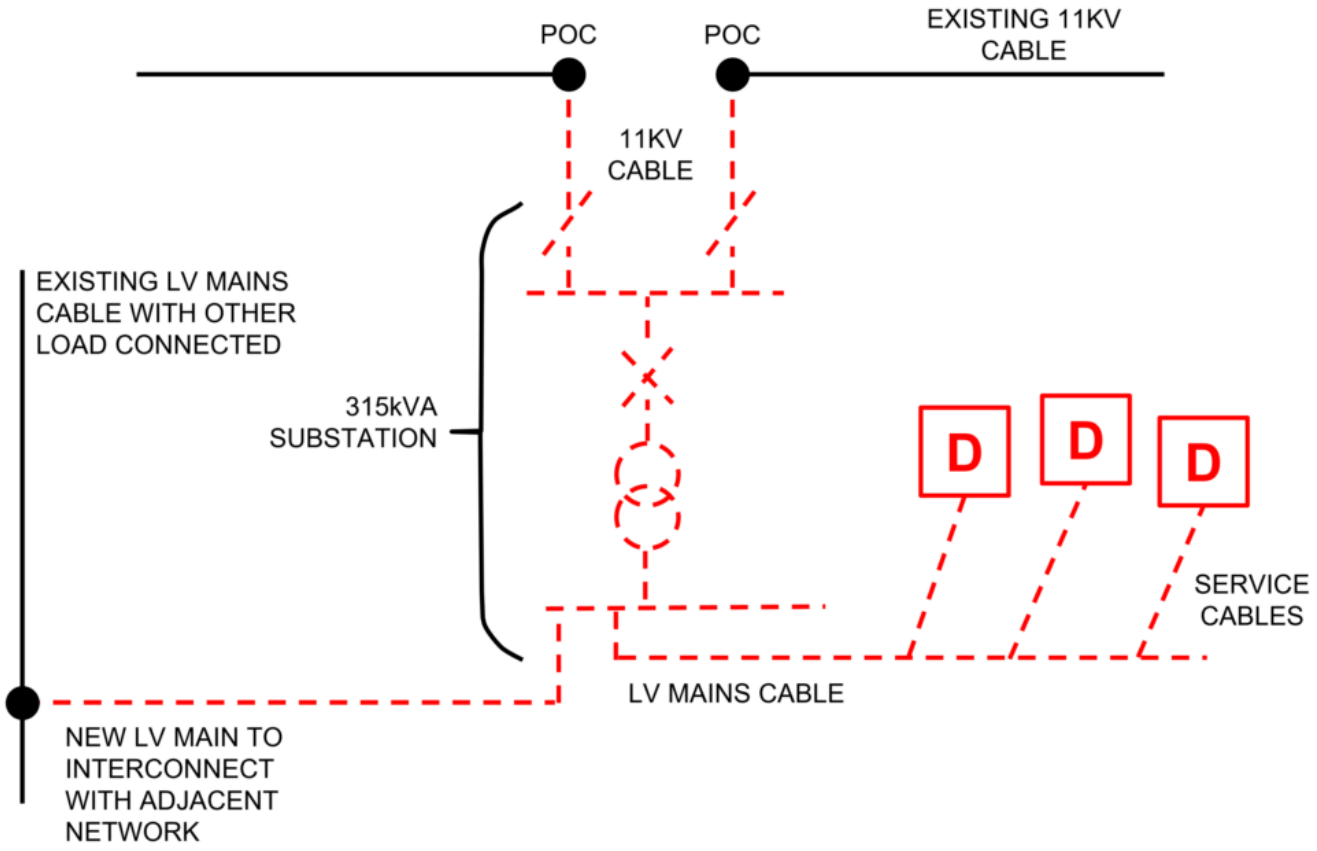

The Connection Charge for this Scheme is calculated as follows:

Extension Assets:	**Cost**	**Apportionment**	**Customer Contribution**
Provision and installation 100m 11kV cable (from existing 11kV network to substation)	£30,000	n/a	£30,000
315kVA substation	£60,000	n/a	£60,000
LV mains, service cables and terminations (from substation to the Customer's development)	£200,000	n/a	£200,000
Two 11kV cable joints	£6,000	n/a	£6,000
Interconnecting cable (from substation to existing LV network)	£12,000	In excess of Minimum Scheme	£12,000
LV cable joint	£300	In excess of Minimum Scheme	£300
Difference between Minimum Scheme and actual Scheme is £12,300. Operations & maintenance @ 20%* of £12,300		20%* of £12,300	£2,460
Total Extension Asset Cost	**£308,300**		**£310,760**

*Note, the 20% Operation and Maintenance percentage has been used for illustrative purposes only.

Total cost of the work = £308,300

Total Connection Charge to Customer = £308,300 + £2,460 = £310,760

Example 4: A new connection with interconnection requested by us

Purpose: To illustrate Exception 1 where LV and HV Extension Assets are charged in full to the Customer, but the interconnection is paid in full by us.

As in Example 2, a housing developer requests connections for 200 domestic Premises. The Required Capacity to supply the 200 homes is 250kVA. A new distribution substation will be established to provide the Required Capacity of the site. The Minimum Scheme requires the substation to be looped into the existing 11kV network. However, in this Example there is an option to provide an additional LV cable to interconnect the distribution substation with the existing LV network. This option is over and above the Minimum Scheme.

Interconnecting into the existing LV network will increase the capacity of the existing Distribution System. Therefore, the assets that connect the 11kV and LV network would normally be considered to be Reinforcement. These assets (as shown on the diagram below) include the 11kV cable, the 315kVA substation and the interconnecting LV main. They exclude the LV mains and service cables from the 315kVA substation to the Customer's development. However, whether these assets are to be considered Reinforcement or Extension Assets depends upon who requested the LV interconnection.

In this case all the requirements of Exception 1 (paragraph 1.22) are met so the assets that connect the existing 11kV and LV Distribution System will be treated as Extension Assets. The Customer will pay the costs associated with the Minimum Scheme in full. The interconnecting LV cable and associated LV joint, as they are over and above the Minimum Scheme and were requested by us, therefore the costs will be borne in full by us.

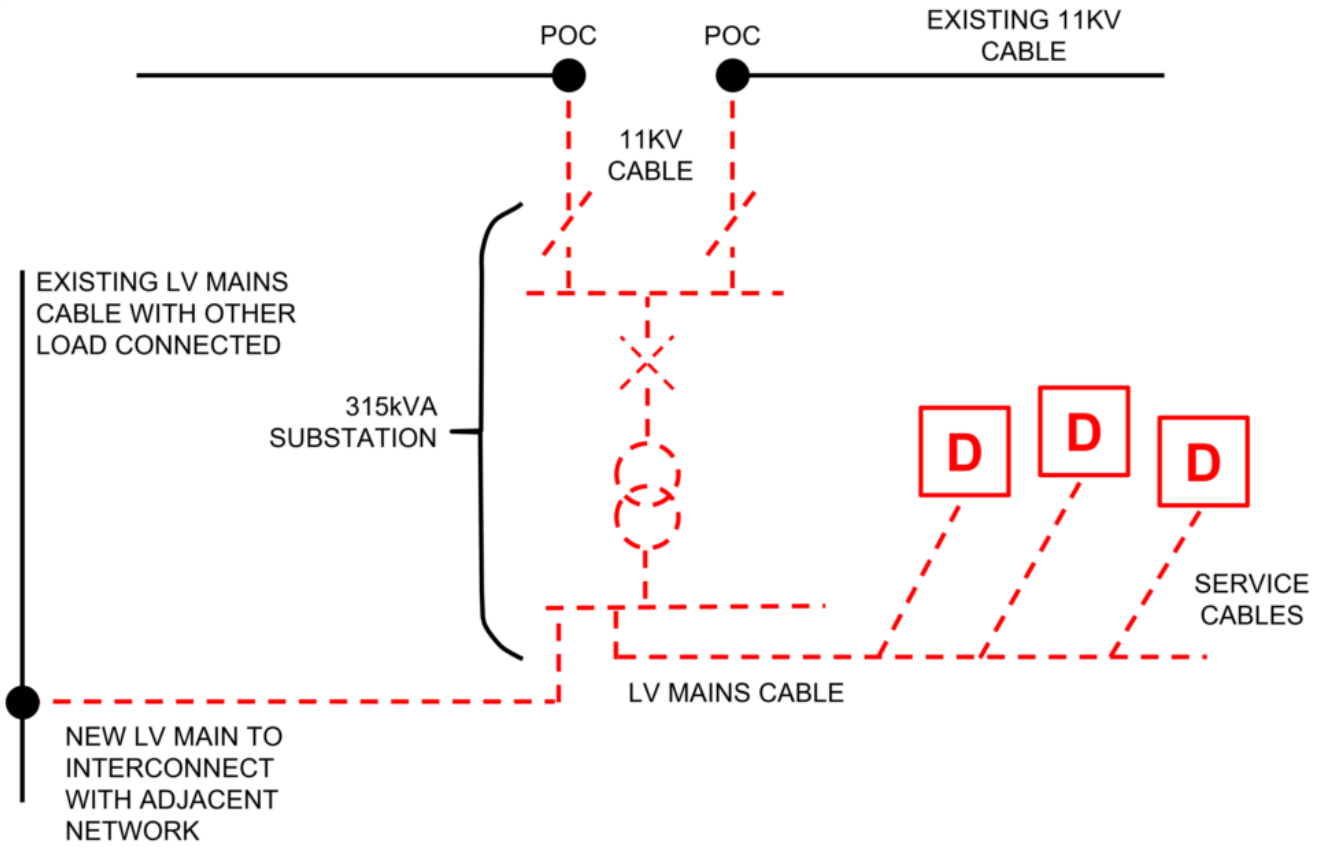

The Connection Charge for this Scheme is calculated as follows:

Extension Assets:	Cost	Apportionment	Customer Contribution
Provision and installation 100m 11kV cable (from existing 11kV network to substation)	£30,000	n/a	£30,000
315kVA substation	£60,000	n/a	£60,000

LV mains, service cables and terminations (from substation to the Customer's development)	£200,000	n/a	£200,000
Two 11kV cable joints	£6,000	n/a	£6,000
Interconnecting cable (from substation to existing LV network)	£12,000	In excess of Minimum Scheme	£0
LV cable joint	£300	In excess of Minimum Scheme	£0
Total Extension Asset Cost	**£308,300**		**£296,000**

Total cost of the work= £308,300

Total Connection Charge to Customer= £296,000

Example 5: A new connection where the Minimum Scheme is a new substation teed onto the existing HV network.

Purpose: Simple example of a commercial connection, Extension Assets only, so charged in full to the Customer.

A Customer requests a new LV three phase 600kVA connection to commercial Premises. Four scenarios for connection are considered in Examples 5 to 8. The Minimum Scheme will be dependent on the specific circumstances as set out in paragraphs 1.1 to 1.7.

In this example the Minimum Scheme is a new 800kVA substation teed onto the existing 11kV network. The figure below shows the proposed network.

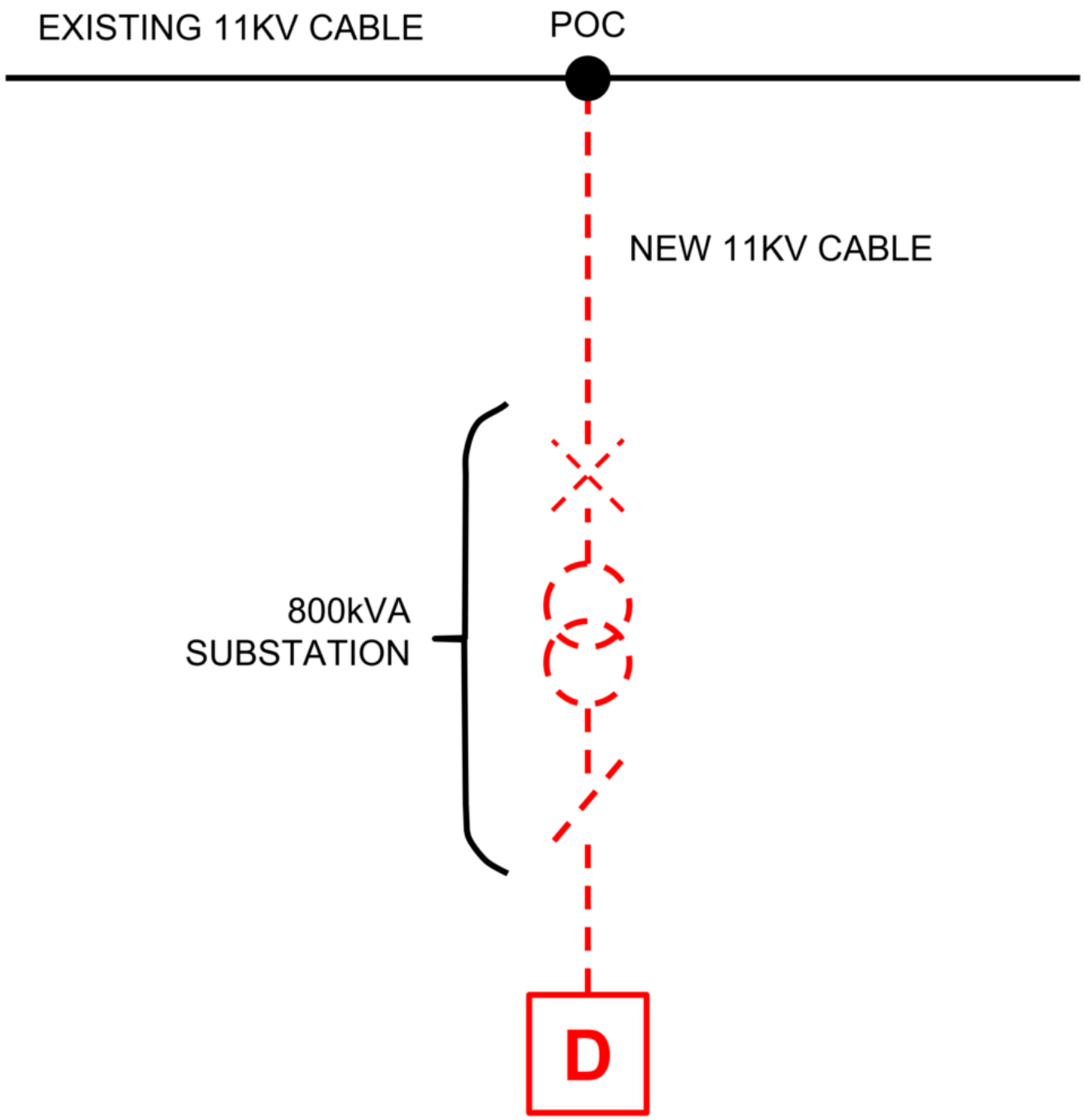

The Connection Charge for this Scheme is calculated as follows:

Extension Assets:	**Cost**	**Apportionment**	**Customer Contribution**
Provision and installation of 150m of 11kV cable	£45,000	n/a	£45,000
800kVA substation	£85,000	n/a	£85,000
Provision and installation LV cabling	£6,000	n/a	£6,000
LV Metering Panel	£4,000	n/a	£4,000
11kV joint to network	£3,000	n/a	£3,000
Total Extension Asset Cost	**£143,000**		**£143,000**

Total cost of the work = £143,000

Total Connection Charge to Customer = £143,000

Example 6: A new connection where the Minimum Scheme is a new substation looped into existing HV network.

Purpose: Simple example of looped connection, Extension Assets only, so charged in full to the Customer.

In this variation to Example 5, the Customer is connected with a looped connection, as illustrated in the following diagram. The Minimum Scheme is a new 800kVA substation looped into existing 11kV network.

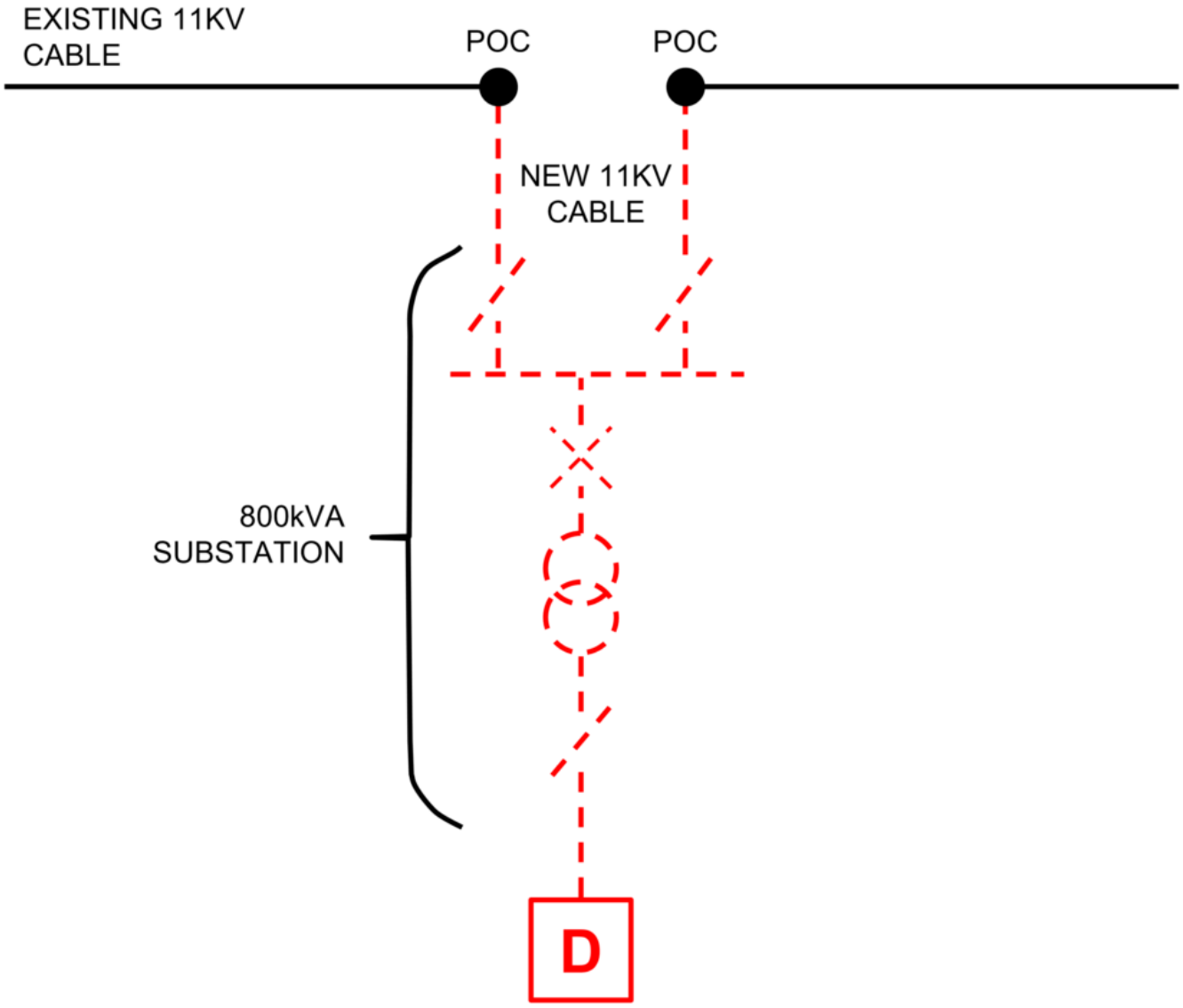

The Connection Charge for this Scheme is calculated as follows:

Extension Assets:	**Cost**	**Apportionment**	**Customer Contribution**
Provision and installation of 300m (2x150m) of 11kV cable looped into the network,	£90,000	n/a	£90,000
800kVA transformer	£75,000	n/a	£75,000

Ring Main Unit	£25,000	n/a	£25,000
Provision and installation LV cabling	£6,000	n/a	£6,000
LV Metering Panel	£4,000	n/a	£4,000
11KV joints to network	£6,000	n/a	£6,000
Total Extension Asset Cost	**£206,000**		**£206,000**

Total cost of the work = £206,000

Total Connection Charge to Customer = £206,000

Example 7: A new connection where the Minimum Scheme is as for Example 5 but the Customer requests an enhanced connection arrangement where the substation is looped into existing HV network.

Purpose: Shows that for a Customer requested Enhanced Scheme that the Customer pays costs above the Minimum Scheme plus O&M.

In this variation to Example 5, the Customer requests an enhanced connection arrangement where the substation is looped into existing 11kV network, as illustrated in the following diagram. The Minimum Scheme is as for Example 5.

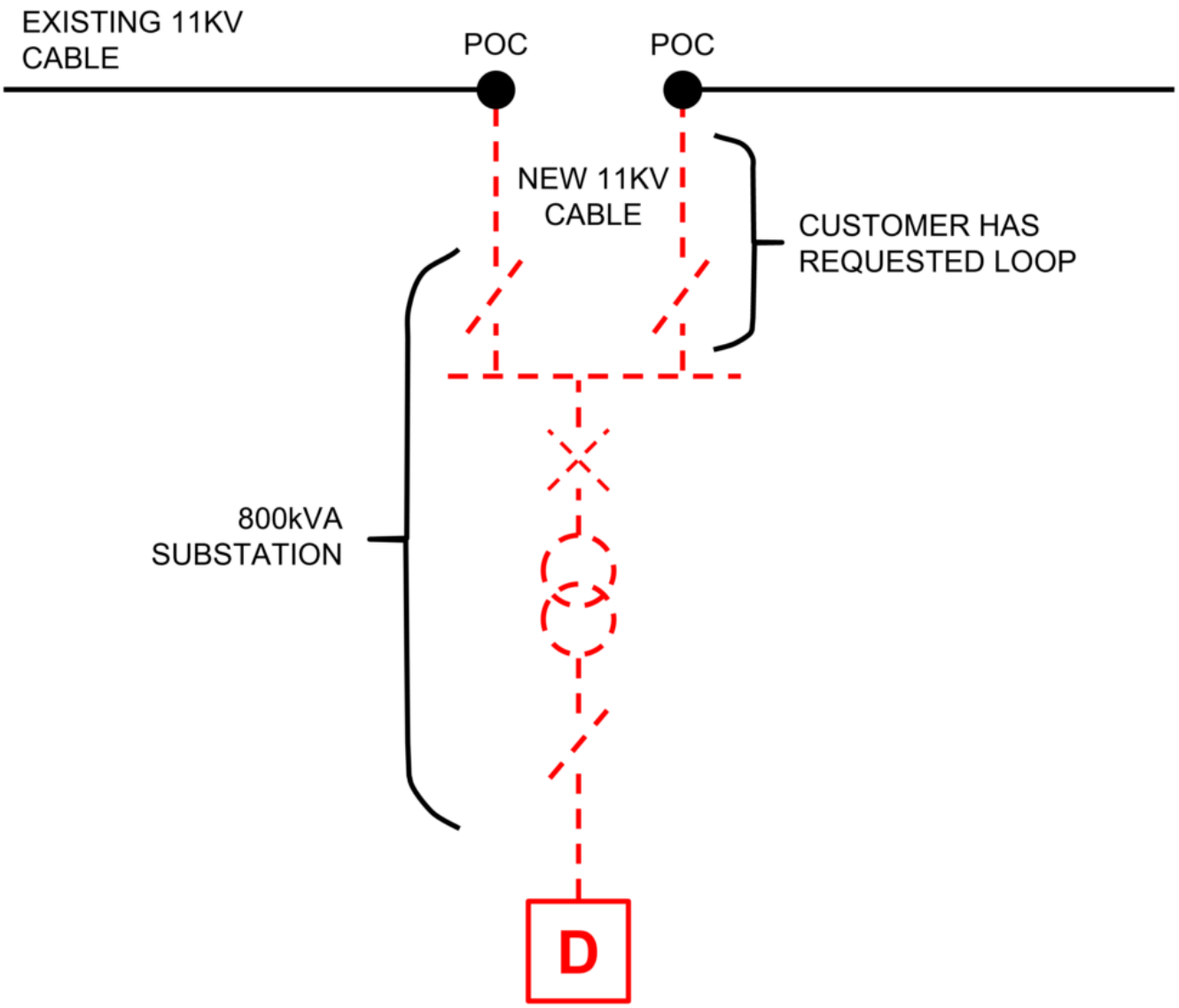

The Connection Charge for this Scheme is calculated as follows:

Extension Assets:	**Cost**	**Apportionment**	**Customer Contribution**
Provision and installation of 300m (2x150m) of 11kV cable looped into the network	£90,000	n/a	£90,000
800kVA transformer	£75,000	n/a	£75,000
Ring Main Unit	£25,000	n/a	£25,000
Provision and installation LV cabling	£6,000	n/a	£6,000
LV Metering Panel	£4,000	n/a	£4,000
11kV joints to network	£6,000	n/a	£6,000
Total Extension Asset Cost	**£206,000**		**£206,000**
Difference between Minimum and the actual Scheme is £63,000 (£206,000-£143,000). Operation & Maintenance @20%* of £63,000.		20%* of £63,000	£12,600
Total Extension Asset Cost incl O&M			**£218,600**

*Note, the 20% Operation and Maintenance percentage has been used for illustrative purposes only

Total cost of the work = £206,000

Total Connection Charge to Customer = £206,000 + £12,600 = £218,600

Example 8: A new connection where the Minimum Scheme is as for Example 5 but we request an Enhanced Scheme where the substation is looped into the existing HV network.

Purpose: Shows that for a DNO requested Enhanced Scheme that the DNO pays for all costs above Minimum Scheme.

In this variation to Example 5, the Customer is connected with a looped connection, as illustrated in the following diagram. The Minimum Scheme is as for Example 5 but we request an Enhanced Scheme where the substation is looped into the existing 11kV network.

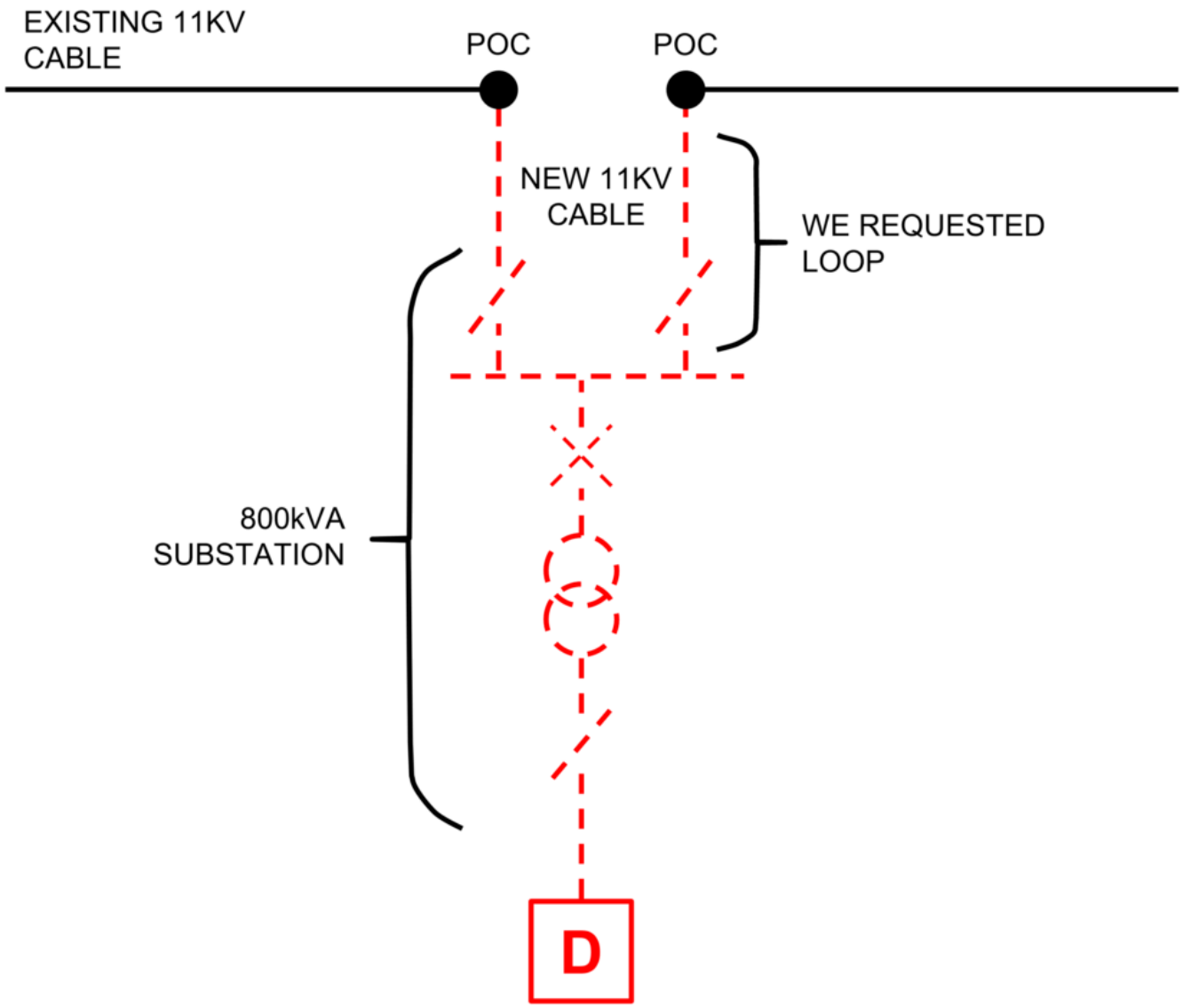

The Connection Charge for this Scheme is calculated as follows:

Extension Assets:	Cost	Apportionment	Customer Contribution
Provision and installation of 300m (2x150m) of 11kV cable	£90,000	Minimum Scheme charges apply	£45,000
800kVA transformer	£75,000	Minimum Scheme charges apply	£85,000
Ring Main Unit	£25,000		
Provision and installation LV cabling	£6,000	n/a	£6,000
LV Metering Panel	£4,000	n/a	£4,000
11kV joints to network	£6,000	Minimum Scheme charges apply	£3,000
Total Extension Asset Cost	**£206,000**		**£143,000**

Total cost of the work = £206,000

Total Connection Charge to Customer = £143,000

Example 9: An additional load application requiring a new connection from the HV network and Reinforcement.

Purpose: To demonstrate the treatment of Reinforcement cost for a Demand Connection that drives Reinforcement.

A Customer requests to increase the Maximum Capacity of their existing LV connection from 200kVA to 850kVA; an increase of 650kVA (the Required Capacity). The Connection is a Demand Connection.

As the Customer's existing LV connection is unable to deliver the Required Capacity a new connection will be required from the local 11kV network. This will be a non-secure connection to a secure network. The Minimum Scheme is to overlay part of the nearest 11kV circuit (Feeder 2) which only has spare capacity of 200kVA. The Reinforcement to make the capacity available requires 1200m of existing 11kV cable to be overlaid with a larger capacity cable. Costs of the disconnection of the existing LV connection have not been included in this example.

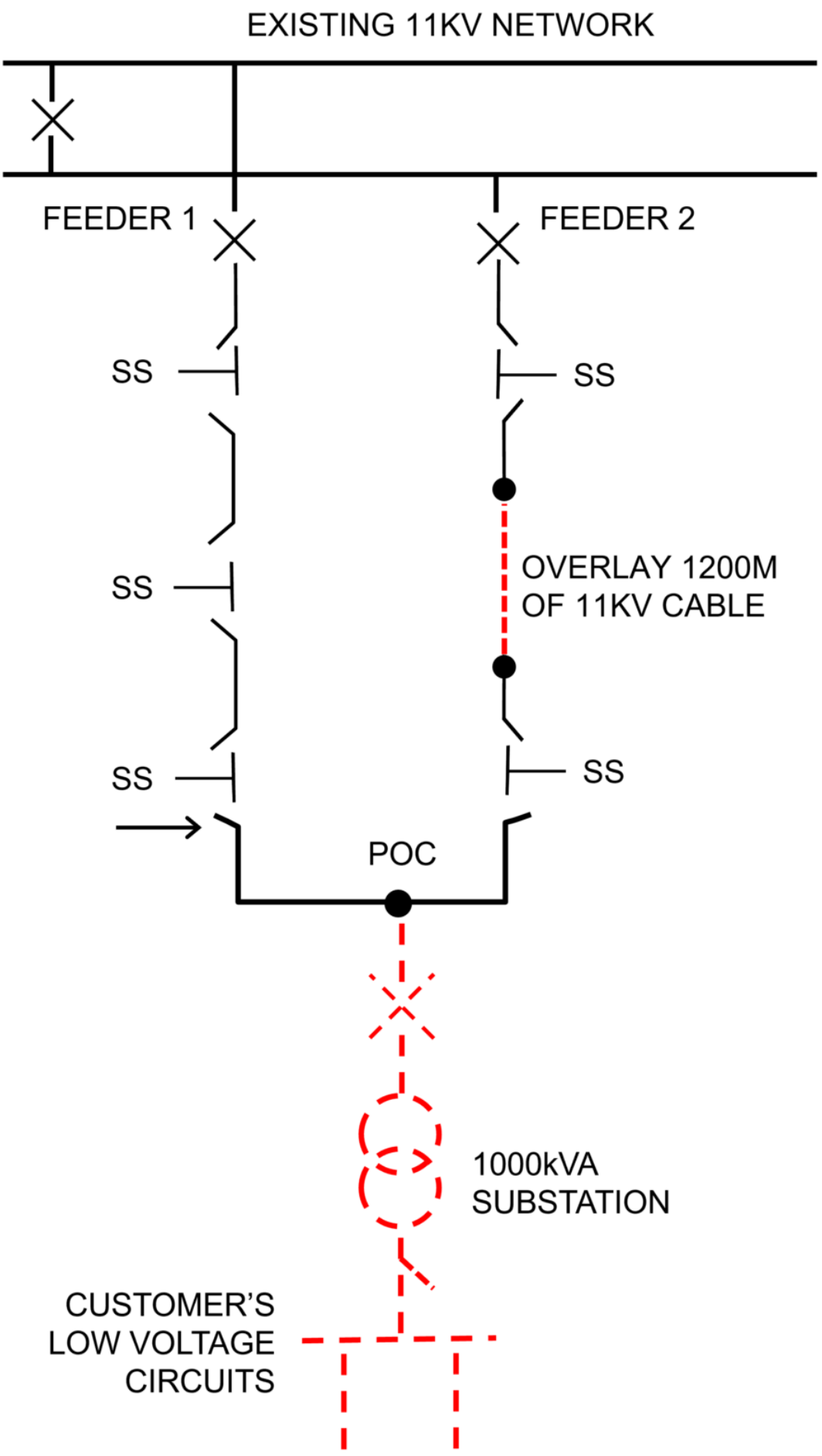
EXISTING 11KV NETWORK
FEEDER 1
FEEDER 2
SS
SS
SS
SS
SS
OVERLAY 1200M
OF 11KV CABLE
POC
1000kVA
SUBSTATION
CUSTOMER'S
LOW VOLTAGE
CIRCUITS

Reinforcement:

The Relevant Section of Network is the two feeder ring comprising Feeder 1 and Feeder 2.

As this connection is a Demand Connection the Customer will not be charged for Reinforcement. The Connection Charge for this Scheme is calculated as follows:

Reinforcement	Cost	Apportionment	Customer Contribution
Overlay 1200m of 11kV cable	£360,000	0%	£0
11kV Jointing	£6,000	0%	£0
Total Reinforcement Cost	£366,000		£0

Extension Assets	Cost	Apportionment	Customer Contribution
Provision and installation 11kV cable	£60,000	n/a	£60,000
1000kVA substation	£80,000	n/a	£80,000
Termination of Customer's LV cables	£4,000	n/a	£4,000
LV Metering panel	£4,000	n/a	£4,000
11kV Jointing	£3,000	n/a	£3,000
Total Extension Asset Cost	£151,000		£151,000

Total Cost of the Work = £366,000 + £151,000 = £517,000

Total Connection Charge to Customer = £151,000

Example 10: A new connection that results in a Point of Connection further away than the nearest network.

Purpose: To show that the Minimum Scheme may result in a Point of Connection that is further away than the nearest network and may result in increased Extension Asset costs that are charged in full to the Customer.

A Customer applies for a new connection with a Maximum Capacity of 100kVA.

Assessment of the local network identifies that there is an existing LV cable to the front of the development, which is fed from a 315kVA transformer. The LV cable has sufficient spare capacity for the connection; however, the transformer is at full capacity and would therefore require Reinforcement work to upgrade it from a 315kVA to 500kVA transformer.

Two design options are considered.

1. For the first option, the cost of this work is estimated to be £70,000, and the cost of the LV Mains Service is estimated to be £5,000.

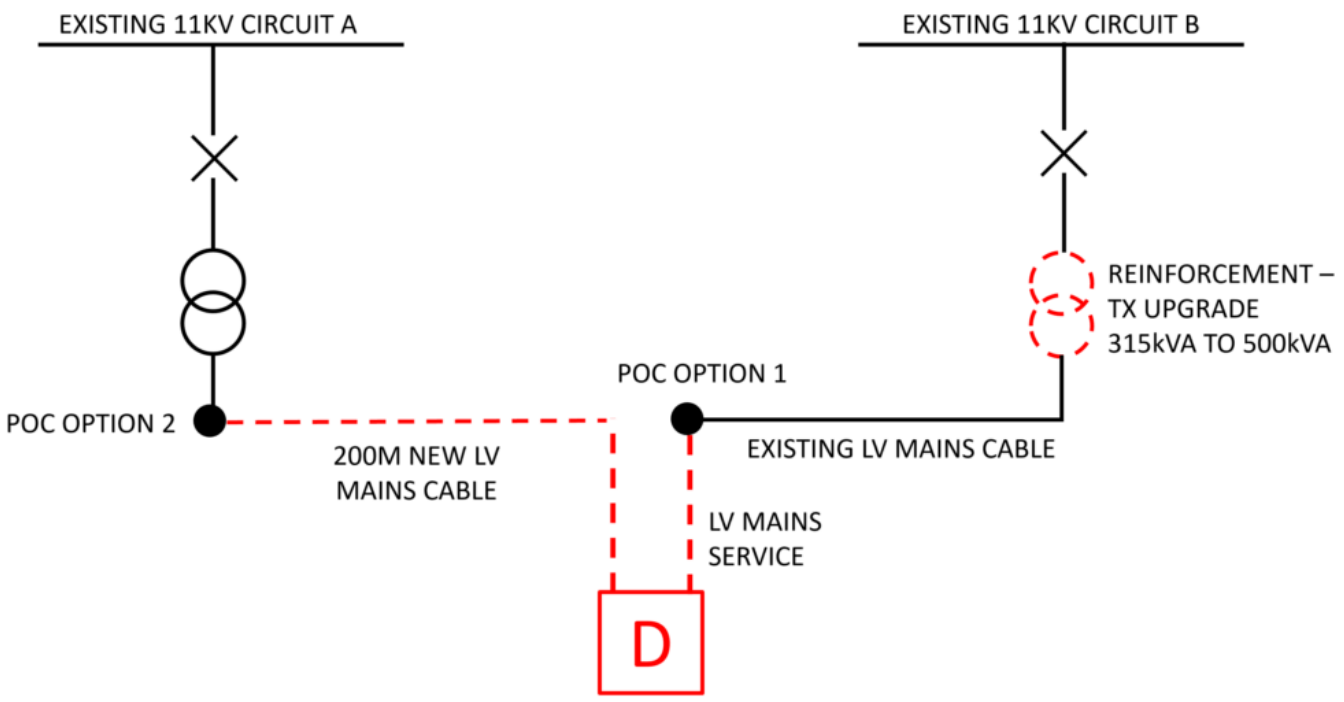

The Connection Charge for this Option 1 would be calculated as follows:

Reinforcement Assets:	**Cost**	**Apportionment**	**Customer Contribution**
Upgrade 315kVA transformer to 500kVA	£70,000	0%	£0
Total Reinforcement Asset Cost	**£70,000**		**£0**

Extension Assets:	**Cost**	**Apportionment**	**Customer Contribution**
LV Mains Service	£5,000	n/a	£5,000
Total Extension Asset Cost	**£5,000**		**£5,000**

Total cost of the work = £70,000 + £5,000 = £75,000

Total Connection Charge to Customer = £5,000 = £5,000

2. For the second option, there is a large cross-sectional LV cable 200m from the development which is fed from a 1000kVA transformer, and both the LV cable and transformer have sufficient spare capacity to provide a connection to the development without Reinforcement work. This design requires Extension Assets involving 200m of LV Cable estimated to cost £40,000 and a mains type service; the cost of the LV Mains Service is £5,000 consistent with the first option.

The Connection Charge for Option 2 would be calculated as follows:

Extension Assets:	**Cost**	**Apportionment**	**Customer Contribution**
200m of LV mains cable	£40,000	n/a	£40,000
LV Mains Service	£5,000	n/a	£5,000

Total Extension Asset Cost	**£45,000**		**£45,000**

Total cost of the work = £45,000

Total Connection Charge to Customer = £45,000

Option 2 has the lower overall capital cost of £45,000 (compared to £75,000 for Option 1) and therefore represents the Minimum Scheme. Whilst Option 2 results in a higher charge to the Customer, it is the overall capital cost that is used to determine the Minimum Scheme. The connection offer to the Customer would therefore be based on Option 2.

Example 11: A new Generation Connection with capacity triggered Reinforcement.

Purpose: To demonstrate the treatment of Reinforcement cost for a Generation Connection which drives Reinforcement using the Security CAF.

A Customer requests a Generation Connection with a Required Capacity for export purposes of 3MW. The Minimum Scheme requires the Reinforcement of 500m of 11kV overhead line between points A and B to provide 7.6MVA of capacity.

The POC is to the existing 11kV network at point B and it is proposed to install 500m of 11kV underground cable from the POC to the Customer's installation and this cable is treated as Extension Assets.

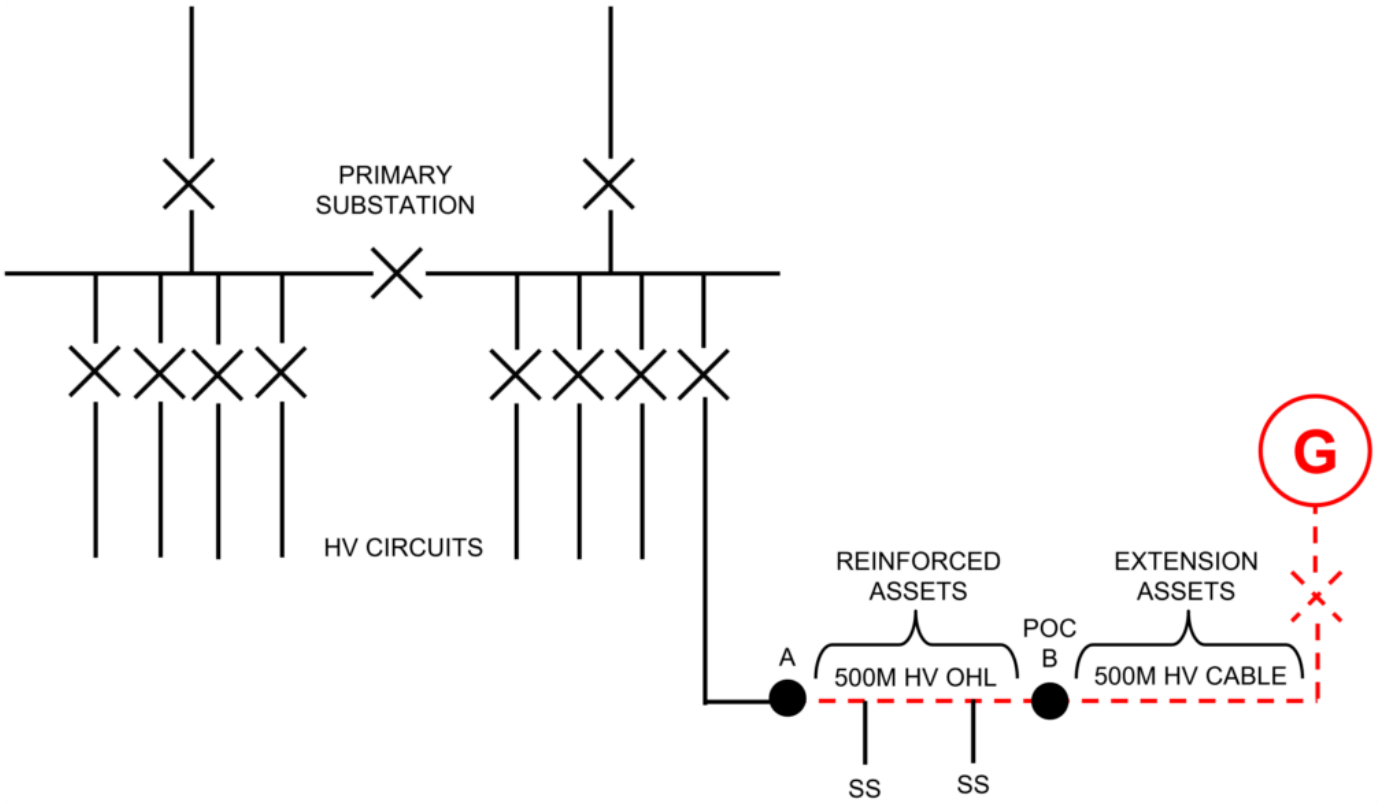

Reinforcement:

The Relevant Section of Network is the 11kV OHL between points A and B and the Security CAF applies. The numerator in the CAF calculation is based upon the Required Capacity of the Customer, i.e. 3MVA and the denominator is based on the New Network Capacity following Reinforcement, i.e. 7.6MVA.

The Connection Charge for this Scheme is calculated as follows:

Reinforcement:	**Cost**	**Apportionment**	**Customer Contribution**
Re-conductor 500m of 11kV overhead line at a higher capacity (7.6MVA)	£60,000	3/7.6 x 100% = 39.5%	£23,700
Total Reinforcement Cost	**£60,000**		**£23,700**

Extension Assets:	**Cost**	**Apportionment**	**Customer Contribution**
Installation of 500m 11kV cable	£45,000	n/a	£45,000
11kV circuit breaker at Customer's substation	£25,000	n/a	£25,000
Total Extension Asset Cost	**£70,000**		**£70,000**

Total cost of the work = £60,000 + £70,000 = £130,000

Total Connection Charge to Customer = £23,700 + £70,000 = £93,700

Example 12: A new Generation Connection with Fault Level-Triggered Reinforcement.

Purpose: To demonstrate how the Fault Level CAF calculation is applied.

A Customer wishes to connect a new generator with a Required Capacity for export purposes of 6MW. The connection of the generator requires the installation of 500m of 11kV cable and 1500m of overhead line between a new circuit breaker, added to the 11kV extensible switchgear panel at an existing primary substation and a new substation at the Customer's Premises. These assets are treated as Extension Assets.

The connection of the generator necessitates Reinforcement works to replace the 11kV switchgear at the existing primary substation with switchgear of a higher fault level rating.

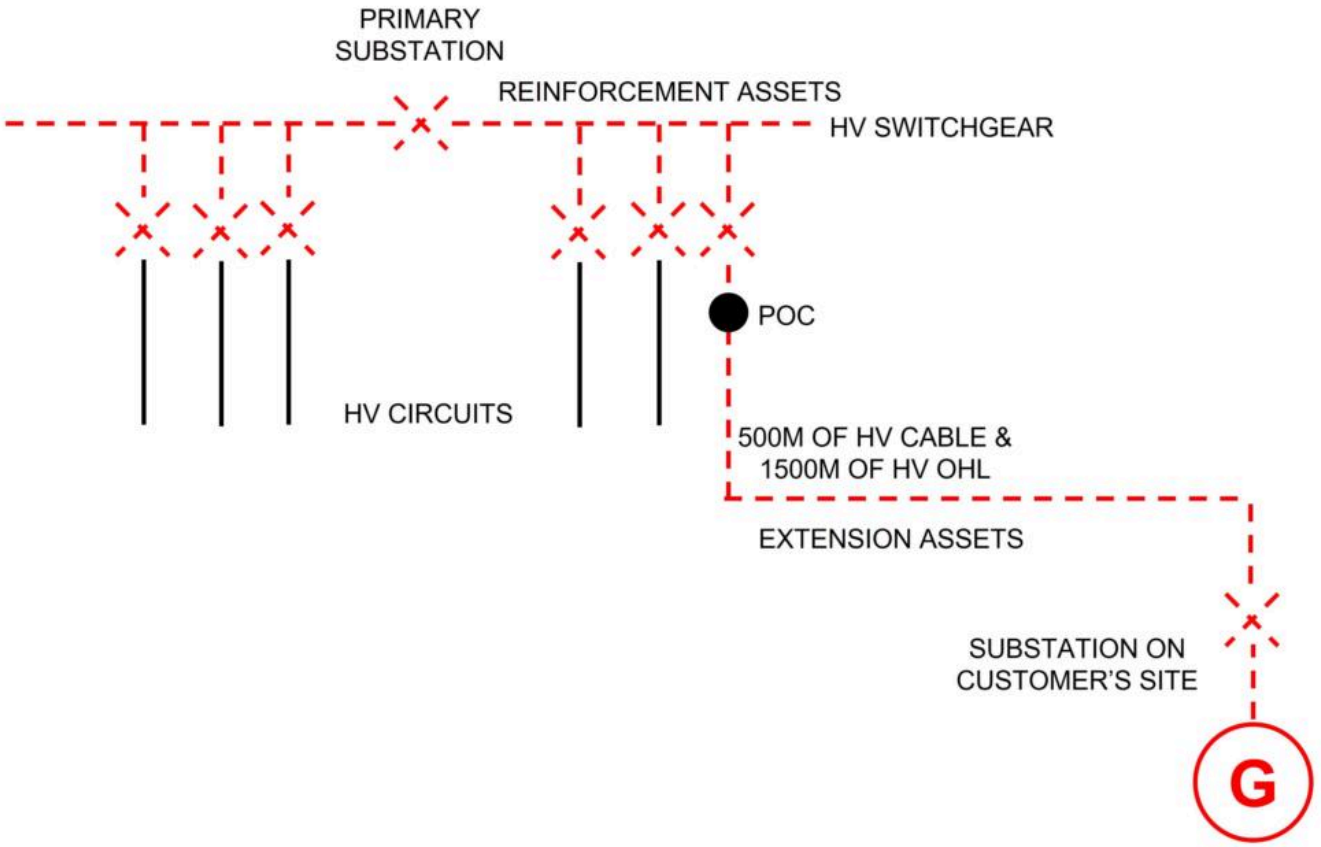

Reinforcement:

Fault Level CAF calculation: The numerator in the CAF calculation is based upon the Fault Level contribution from the Customer's new generator connection, in this example 24MVA. The denominator is based upon the New Fault Level Capacity; in this Example the Fault Level capacity of the new 11kV switchboard, 315MVA.

The Connection Charge for this Scheme is calculated as follows:

Reinforcement:	**Cost**	**Apportionment**	**Customer Contribution**
Replacement 11kV switchboard (excluding Customer's sole use circuit breaker)	£800,000	3x (24/315) x 100% = 22.9%	£182,857
Total Reinforcement Cost	£800,000		£182,857

Extension Assets:	**Cost**	**Apportionment**	**Customer Contribution**
Installation of a 500m 11kV cable	£150,000	n/a	£150,000
Installation of a 1500m 11kV overhead line	£120,000	n/a	£120,000
11kV circuit breaker at Customer substation	£25,000	n/a	£25,000
Total Extension Asset Cost	**£325,000**		**£325,000**

Total cost of the work = £800,000 + £325,000 = £1,125,000

Total Connection Charge to Customer = £182,857 + £325,000 = £507,857

Example 13: A new Generation Connection that requires Reinforcement involving both Security and Fault Level CAFs.

Purpose: To demonstrate Reinforcement charging principles for a Generation Connection where both Security CAF and Fault Level CAF are applicable.

A Customer requests a connection to a generator with a Required Capacity for export purposes of 6MW. The Fault Level contribution at the primary substation from the generation connection is 10MVA.

The POC is to the existing 11kV network at point B and it is proposed to install 500m of 11kV underground cable from the POC to the Customer's installation. This is treated as Extension Assets.

The connection requires the Reinforcement of 500m of 11kV overhead line between points A and B for a thermal capacity requirement and the Security CAF applies. The connection also requires the replacement of the existing 11kV switchboard at the primary substation in order to increase its fault level rating from 150MVA to 350MVA and the Fault Level CAF applies. However, the new fault level will be limited by the fault level rating of the local network of 250MVA.

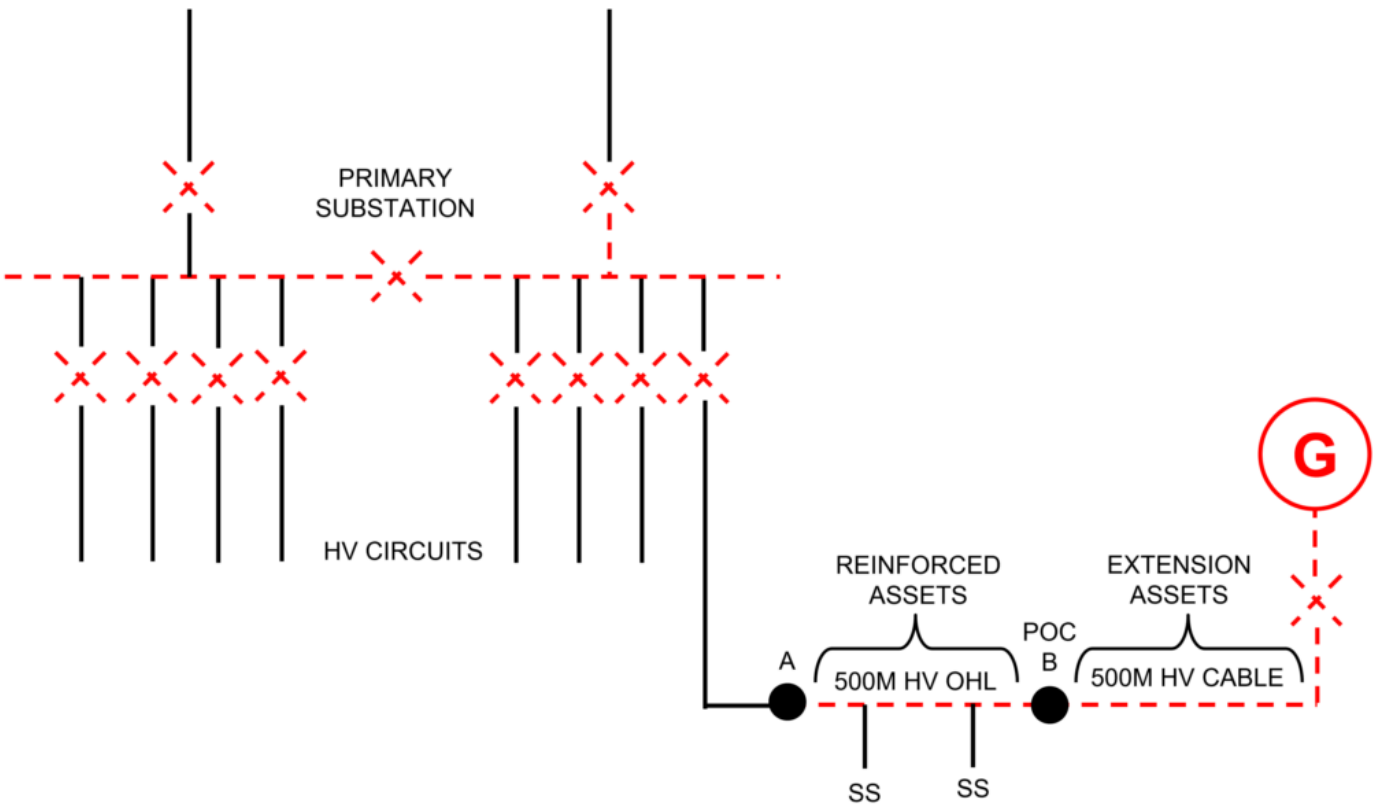

Reinforcement:

The Relevant Section of Network is the 11kV network from the primary substation to Point B.

Security CAF calculation: the numerator in the CAF calculation is based upon the Required Capacity of the Customer, i.e. 6MW. The denominator is based on the New Network Capacity following Reinforcement, which is 7.6MVA, i.e. after Reinforcement, in this particular case, the section of cable with the lowest rating.

The Relevant Section of Network is the 11kV switchboard at the primary substation.

Fault Level CAF calculation: The numerator in the CAF calculation is based upon the Fault Level contribution from the Customer's new generator connection, in this Example 10MVA. The denominator is based upon the New Fault Level

Capacity, which is the lower of the Fault Level capacity of the new 11kV switchboard, 350MVA or of the local system, 250MVA in this Example.

The Connection Charge for this Scheme is calculated as follows:

Reinforcement	**Cost**	**Apportionment**	**Customer Contribution**
Re-conductor of 500m of 11kV overhead line	£20,000	6/7.6 x 100% = 78.9% Security CAF	£15,789
Replacement 11kV switchboard	£800,000	3x (10/250) x 100% = 12.0% Fault Level CAF	£96,000
Total Reinforcement Cost	£820,000		£111,789

Extension Assets	**Cost**	**Apportionment**	**Customer Contribution**
Installation of 500m 11kV cable	£150,000	n/a	£150,000
11kV circuit breaker at Customer's substation	£12,000	n/a	£12,000
11kV pole top termination	£2,500	n/a	£2,500
Total Extension Asset Cost	£164,500		£164,500

Total cost of the work: = £820,000 + £164,500 = £984,500

Total Connection Charge to Customer = £111,789 + £164,500 = £276,289

Example 14: A new Generation Connection with Reinforcement at a voltage above that of the Point of Connection.

Purpose: To illustrate that a Generation Connection does not contribute to Reinforcement costs at a voltage level above the connection voltage.

A Customer requests a Generation Connection with a Required Capacity for export purposes of 6.0MW. A new single circuit cable will be required to connect the Customer to the existing 11kV network. There is sufficient spare capacity on the existing 11kV network main but the existing 7.5MVA transformer at the local 11kV/33kV substation is fully loaded.

The Minimum Scheme is to provide a new 250m 11kV cable from the POC which is treated as Extension Assets. The connection also requires the replacement of the 7.5MW transformer at the local substation with a 10MVA transformer and is treated as Reinforcement. The 11kV and 33kV switchgear either side of the transformer also requires replacement due to exceedance of its thermal capacity.

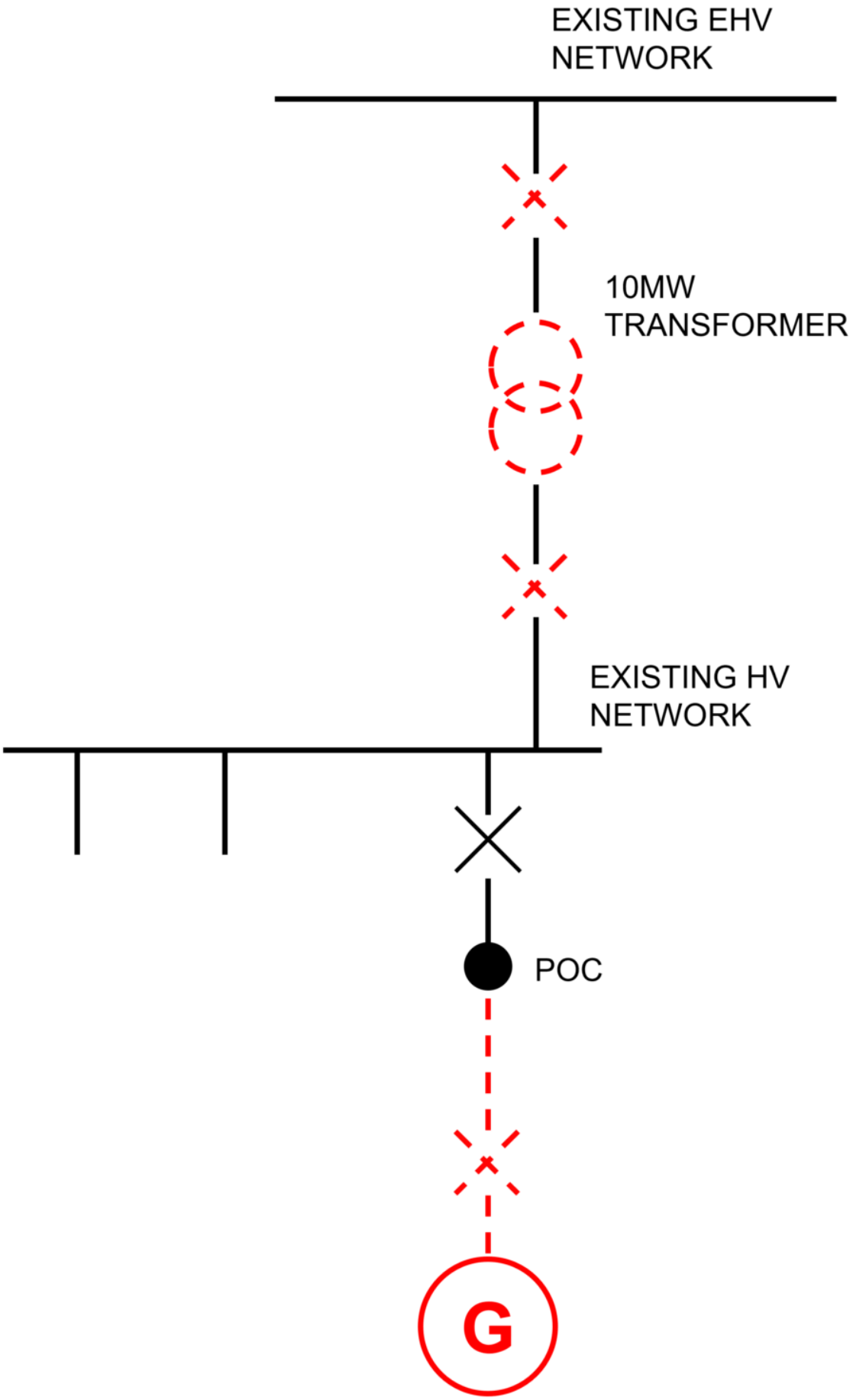
EXISTING EHV
NETWORK
10MW
TRANSFORMER
EXISTING HV
NETWORK
POC
G

Reinforcement:

Security CAF calculation: The numerator in the CAF calculation is based upon the Required Capacity of the Customer, which is 6MW. The denominator is based on the New Network Capacity following Reinforcement, which is 10MVA.

Reinforcement is required at both the 11kV and 33kV levels, however the CAF is only required at the same voltage of connection, which in this case is 11kV.

The Connection Charge for this Scheme is calculated as follows:

Reinforcement:	**Cost**	**Apportionment**	**Customer Contribution**
11kV Jointing	£3,000	6/10 x 100% = 60% Security CAF	£1,800
11kV circuit breaker	£30,000	6/10 x 100% = 60% Security CAF	£18,000
33kV circuit breaker	£80,000	0%	£0
Transformer replacement	£1,000,000	0%	£0
Total Reinforcement Cost	**£1,113,000**		**£19,800**

Extension Assets:	**Cost**	**Apportionment**	**Customer Contribution**
Install 200m of 11kV cable	£60,000	n/a	£60,000
11kV circuit breaker at Customer's substation	£25,000	n/a	£25,000
11kV Jointing	£3,000	n/a	£3,000
Total Extension Asset Cost	**£88,000**		**£88,000**

Total cost of the work = £1,113,000 + £88,000 = **£1,201,000**

Total Connection Charge to Customer = £19,800 + £88,000 = **£107,800**

Example 15: A new Generation Connection where switchgear extension is not possible and switchgear replacement is needed.

Purpose: Illustrate Exception 4, if switchgear extension not possible, then treated as Extension Assets and costs are charged in full to the Customer.

This example demonstrates the application of Exception 4 (paragraph 1.25).

A Customer requests to connect a new generator with a Required Capacity for export purposes of 3MW. The connection of the generator requires the installation of the works as provided in Example 13 above. In this scenario, however, there is no Fault Level issue but, as the connection cannot be facilitated by an extension of the existing switchgear equipment in our primary substation, a full replacement of the existing switchgear installation is required. As no capacity is added to the existing shared use distribution network, the Customer will be required to fund the full cost of the switchgear installation replacement.

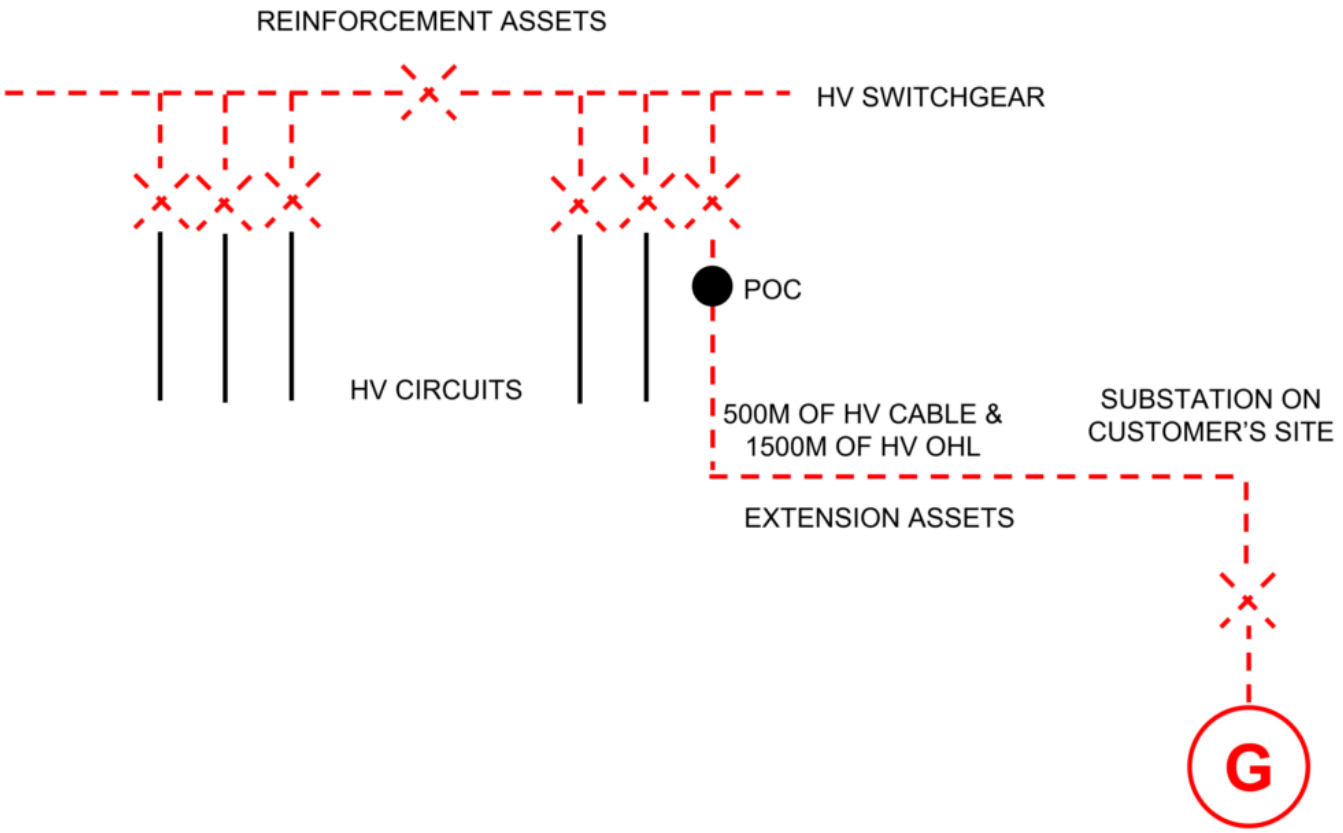

The existing switchgear had fault level rating of 250MVA. The company no longer uses switchgear with a fault level rating of 250MVA, so uses the closest equivalent switchgear used by it as standard, which has a slightly higher rating. Whilst the replacement switchgear increases the fault level capacity and could be considered Reinforcement, in this case this is due solely to the fault level rating of the standard equipment used by the company being higher than the fault level rating of the existing switchgear. The increase in fault level capacity is not required to connect the Customer. Therefore, Exception 4 (Paragraph 1.25) applies and the switchgear is considered Extension Assets and its costs will be charged in full to the Customer.

The Connection Charge for this Scheme is calculated as follows:

Extension Assets:	**Cost**	**Apportionment**	**Customer Contribution**
Installation of a 500m 11kV cable	£150,000	n/a	£150,000
Installation of a 1500m 11kV overhead line	£120,000	n/a	£120,000
11kV circuit breaker at Customer substation	£25,000	n/a	£25,000
Replacement 11kV switchboard	£450,000	n/a	£450,000
New Extension Asset circuit breaker	£25,000	n/a	£25,000
Total Extension Asset Cost	**£770,000**		**£770,000**

Total cost of the work = £770,000

Total Connection Charge to Customer = £770,000

Example 16: A new Storage Connection that triggers Reinforcement.

Purpose: To show that Storage, when not co-located with other demand, is treated as a Generation Connection for the purposes of charging and any Reinforcement at the same Voltage of the POC will be charged, irrespective of whether the Reinforcement is due to the import or the export.

A Customer requests to connect a Battery with a Required Capacity of 3MW export and 3MVA import. The Minimum Scheme requires the Reinforcement of 500m of 11kV overhead line between points A and B to provide 7.6MVA of capacity.

The POC is to the existing 11kV network at point B and it is proposed to install 500m of 11kV underground cable from the POC to the Customer's installation and this cable is treated as Extension Assets.

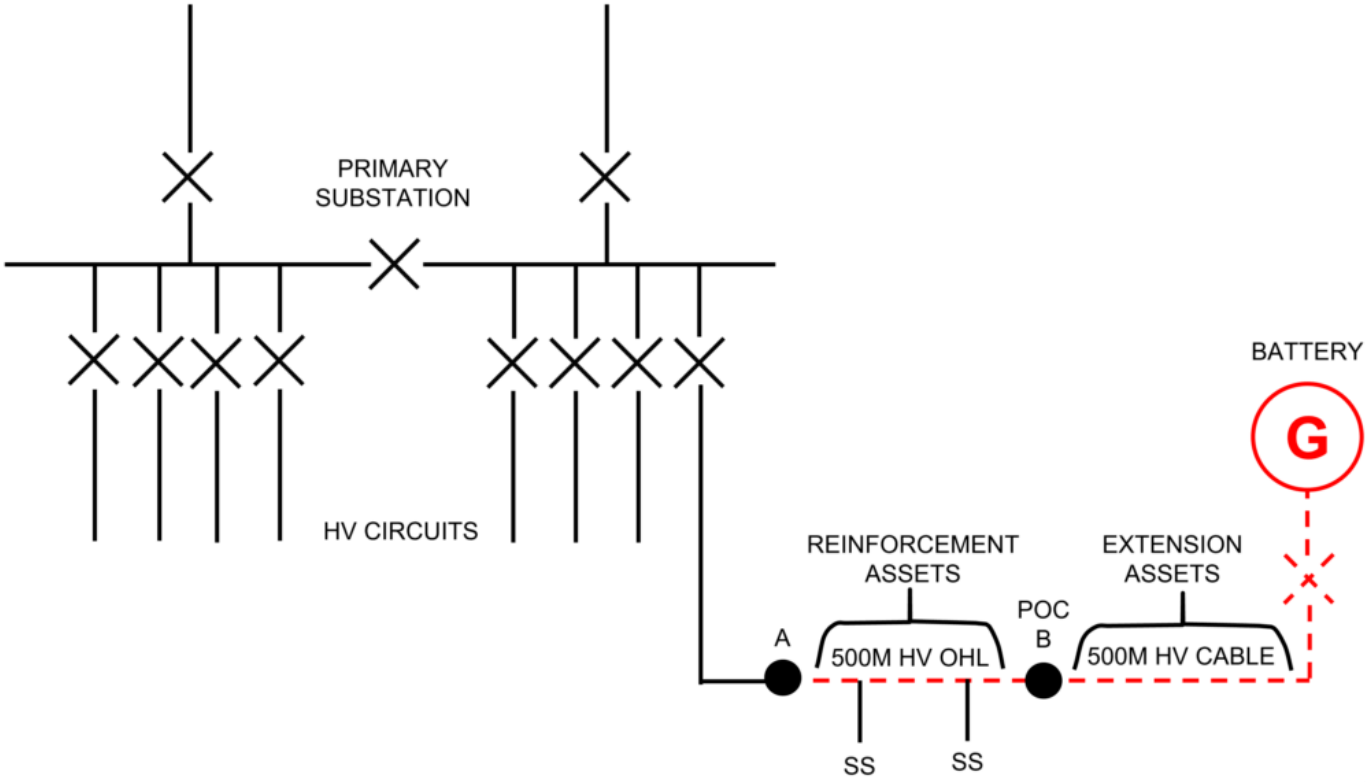

Reinforcement:

The Relevant Section of Network is the 11kV OHL between points A and B and the Security CAF applies. The numerator in the CAF calculation is based upon the Required Capacity of the Customer. In this instance, the reinforcement is driven by the Required Capacity for import, i.e. 3MVA and the denominator is based on the New Network Capacity following Reinforcement, i.e. 7.6MVA.

The Connection Charge for this Scheme is calculated as follows:

Reinforcement:	**Cost**	**Apportionment**	**Customer Contribution**
Re-conductor 500m of 11kV overhead line at a higher capacity (7.6MVA)	£60,000	3/7.6 x 100% = 39.5%	£23,700
Total Reinforcement Cost	**£60,000**		**£23,700**

Extension Assets:	**Cost**	**Apportionment**	**Customer Contribution**
Installation of 500m 11kV cable	£45,000	n/a	£45,000
11kV circuit breaker at Customer's substation	£25,000	n/a	£25,000

Total Extension Asset Cost	**£70,000**		**£70,000**

Total cost of the work = £60,000 + £70,000 = £130,000

Total Connection Charge to Customer = £23,700 + £70,000 = £93,700

Example 17: A new connection that is connected by Reinforced assets

Purpose: To demonstrate the application of Exception 5 where the Customer needs to pay for the assets that connect them to the existing network

A new housing development has a Required Capacity of 1MVA to serve 450 plots. The local 11kV feeder has a network capacity of 7.7MVA based upon the limitation of the existing 400 Amp circuit breakers at Primary Substation A. The existing load on the circuit is 7.6MVA. The new load will be connected to the existing 11kV feeder from Primary Substation A with 100m of 11kV cable from POC A to the point D at the boundary of the site and provide interconnection with 700m of 11kV cable from POC B at Primary Substation B to the boundary of the site at point C. In this example:

- 200m of 11kV cable on site (between points C and D) is required to provide connectivity within the development and is considered to be Extension Assets.
- 100m of 11kV cable from POC A to the point D.
- 700m of 11kV cable from POC B to the point C.

The Minimum Scheme requires the site to be connected onto the existing network. In this case the lowest cost feeder is the 11kV cable from A to D and is treated as an Extension Asset. The alternative connection to POC B at Primary Substation B is required to meet the minimum network security requirements and is treated as Reinforcement.

The figure below shows the proposed network.

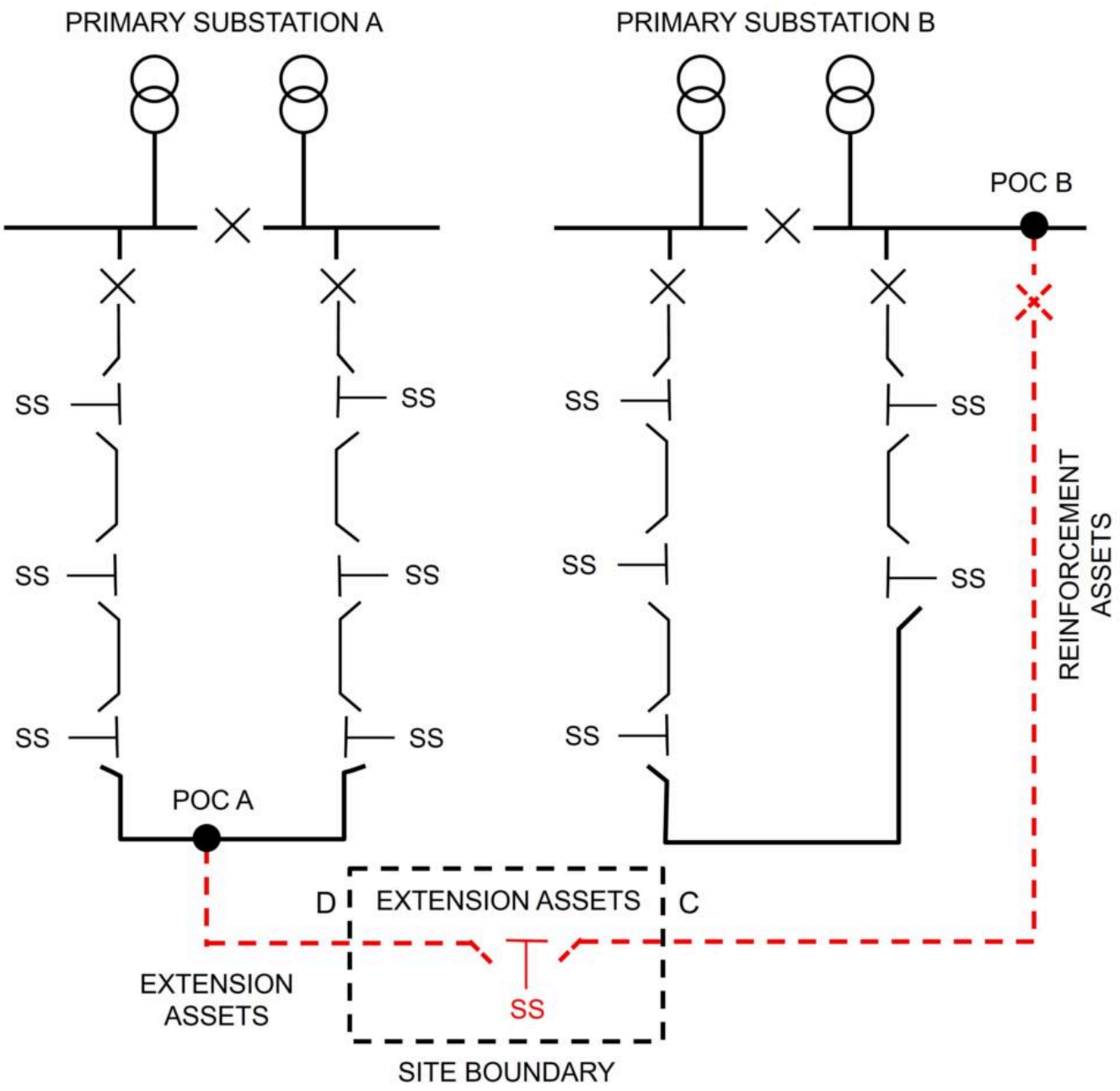

Reinforcement:

The 700m of 11kV cable from POC B at Primary Substation B to point C is treated as reinforcement however as this is a demand connection the reinforcement work is funded by us.

The Connection Charge for this Scheme is calculated as follows:

Reinforcement:	**Cost**	**Apportionment**	**Customer Contribution**
1 new HV Circuit Breaker from POC B	£30,000	0%	£0
2 by HV closing joints	£6,000	0%	£0
700m of HV cable from POC B to point C	£210,000	0%	£0
Total Reinforcement Cost	**£246,000**		**£0**

Extension Assets:	Cost	Apportionment	Customer Contribution
100m of HV cable from POC A to point D	£30,000	n/a	£30,000
One 1000kVA Substation	£75,000	n/a	£75,000
On site LV mains and services	£24,900	n/a	£24,900
2 by HV cable box terminations	£24,000	n/a	£24,000
Total Extension Asset Cost	**£153,900**		**£153,900**

Total cost of the work = £246,000 + £153,900 = **£399,900**

Total Connection Charge to Customer = £153,900 = **£153,900**

Example 18: A new connection of a development

Purpose: To demonstrate the application of Exception 6 where the Customer pays for assets within the site boundary.

This example demonstrates the application of Exception 6 (paragraph 1.27) where the Customer pays for assets within the site boundary.

A new housing development (a Demand Connection) has a Required Capacity of 2MVA to serve 900 plots. The local 11kV feeder has a network capacity of 7.7MVA based upon the limitation of the existing 400 Amp circuit breakers at Primary Substation A. The existing load on the circuit is 7.6MVA. It is therefore not possible to connect the new load to this circuit without Reinforcement works. The Minimum Scheme is to connect the new load to the new 11kV feeder from Primary Substation B and provide interconnection to an existing secure 11kV feeder from Primary Substation A. In this Example 600m of 11kV cable on site (between Points C and D) is required to provide connectivity within the development and is considered to be Extension Assets.

The three 800kVA substations are not considered to provide connection between POC A and POC B. The 600m of 11kV cable on site is additional network length to provide connectivity between multiple exit points on the Customer's site. Therefore, Exception 6 applies and the 600m of 11kV cable on site will be treated as Extension Assets and its costs will be charged in full to the Customer.

The figure below shows the proposed network.

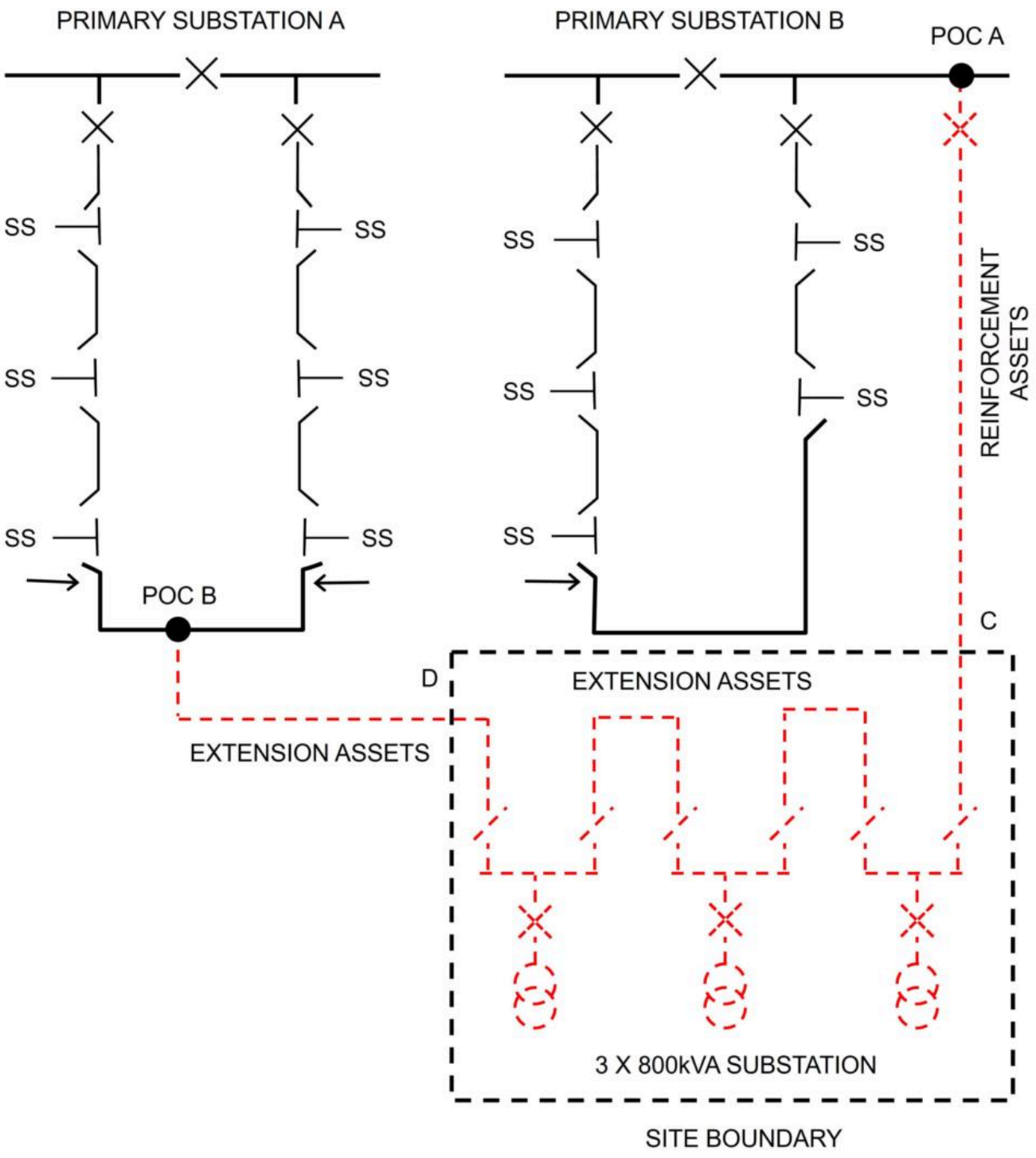

Reinforcement:

The assets connecting POC A and point C add capacity to the existing network will be treated as Reinforcement and funded by us.

The Connection Charge for this Scheme is calculated as follows:

Reinforcement:	Cost	Apportionment	Customer Contribution
1 new 11kV Circuit Breaker tailed out from Primary Substation B (POC A)	£30,000	0%	£0
2 by 11kV closing joints	£6,000	0%	£0

700m of 11kV cable from Primary Substation B to site	£210,000	0%	£0
Total Reinforcement Cost	**£246,000**		**£0**

Extension Assets:	**Cost**	**Apportionment**	**Customer Contribution**
600m of 11kV cable on site	£180,000	n/a	£180,000
3 by 800kVA unit Substation	£225,000	n/a	£225,000
On site LV mains and services	£24,900	n/a	£24,900
2 by 11kV cable box terminations	£24,000	n/a	£24,000
600m of 11kV cable from POC B to site	£180,000	n/a	£180,000
Total Extension Asset Cost	**£633,900**		**£633,900**

Total cost of the work = £246,000 + £633,900 = £879,900

Total Connection Charge to Customer = £0 + £633,900 = £633,900

Example 19: A new connection with remote network Reinforcement

Purpose: To show treatment where capacity is created on a different part of the network and a load transfer is required to allow the connection. Example again demonstrates which elements are Reinforcement and which are Extension Assets.

This example shows the arrangements that will apply where it is necessary to reinforce a different part of the Distribution System so that existing load may be transferred in order to release capacity for the new connection.

A Customer requests a Generation Connection with a Required Capacity of 2MW. The local 11kV feeder has a network capacity of 7.7MW based upon the limitation of the existing 400 Amp circuit breakers at Primary Substation A. The existing load on the circuit is 7.7MW. It is therefore not possible to connect the new generation to this circuit without Reinforcement works.

It is proposed to reinforce an adjacent network from primary substation B so that two existing substations may be transferred on to it from primary substation A, in order to release capacity to accommodate the new connection. Primary Substation B has sufficient spare capacity to accommodate the two existing substations. A new circuit breaker is to be installed at Primary Substation B and a new 11kV feeder (also rated at 7.7MW) is to be installed between points A – B and between points E – F for connection to the local 11kV circuit at point F. The existing circuit will be cut at point BE so that the new joints can be made. This will convert the Primary Substation B network from a two-feeder to a three-feeder network. The total new cable length between points A – B and points E - F is 500m. The network will be reconfigured by the installation of two short straps C – D and G - H in order to maintain connectivity.

This Reinforcement will allow a POC to be taken from the local 11kV circuit to supply the new generation. The newly installed cable to connect the generation from the POC is 1200m long. The above work represents the Minimum Scheme to provide connections to the new site.

The figure below shows the original network.

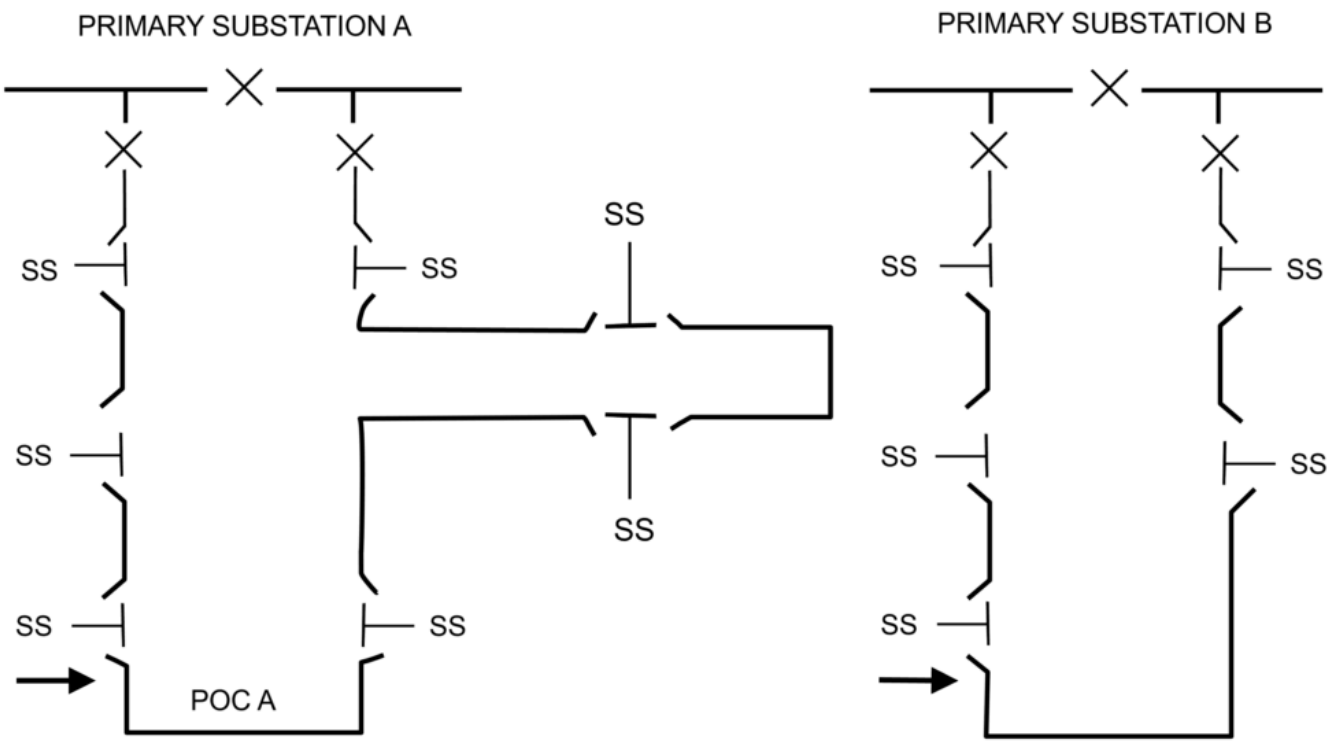

The figure below shows the proposed network.

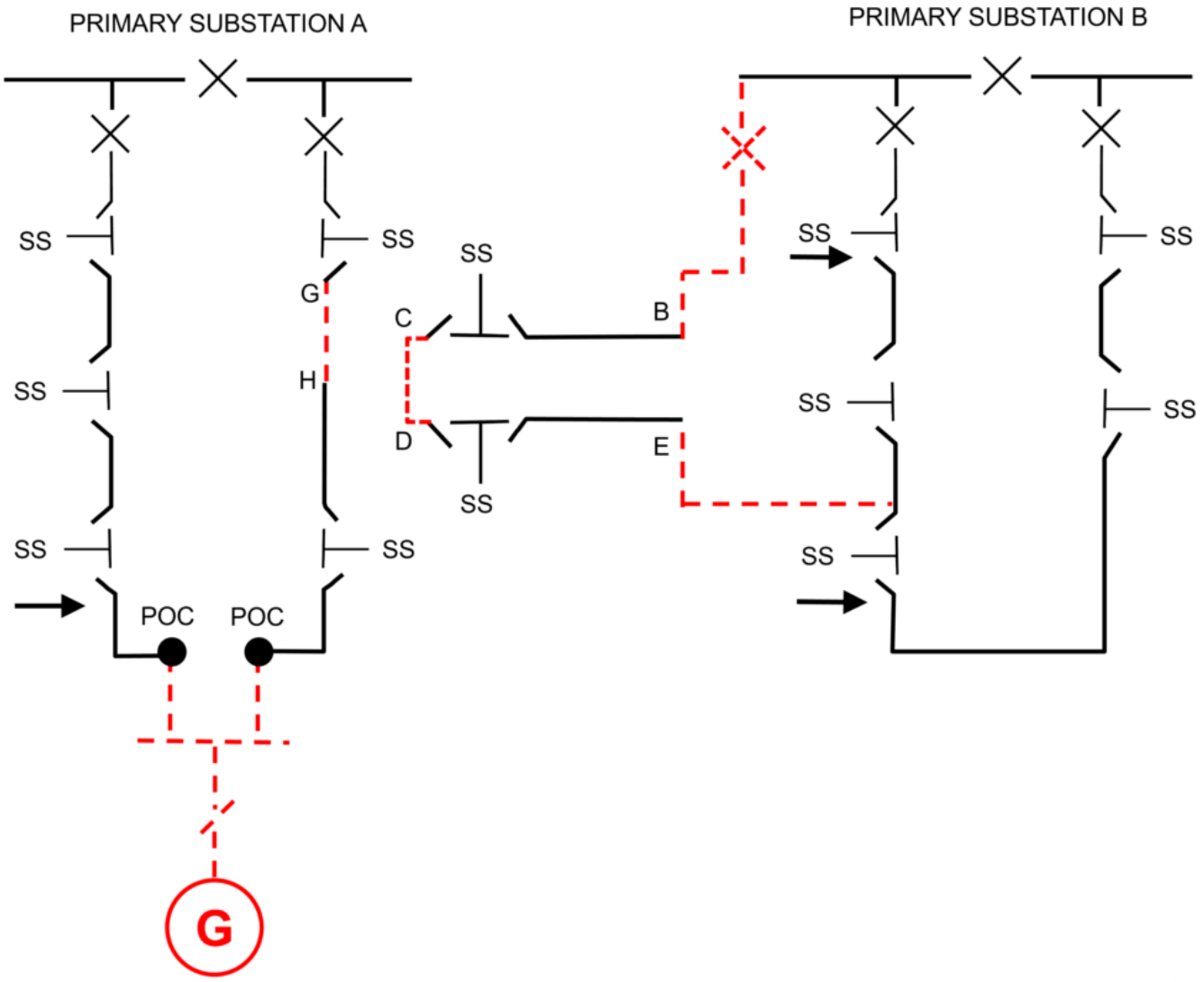

Reinforcement:

The Relevant Section of Network is the three-feeder network from Primary Substation B which supplies the loads on the existing two feeders from Primary Substation B as well as the loads at points C and D transferred from the network from the Primary Substation A. The RSN does not supply the new generation in this case. The numerator in the CAF calculation is based upon the Required Capacity of the new generation, i.e. 2MW. In this case, the New Network Capacity (under N-1 conditions) following the Reinforcement works is equal to (3 – 1) x 7.7MW = 15.4MW.

Fault Level CAF calculation: This Scheme does not have any significant Fault Level contribution to the existing shared use distribution network and Fault Level CAF is therefore not applicable here.

The Connection Charge for this Scheme is calculated as follows:

Reinforcement:	**Cost**	**Apportionment**	**Customer Contribution**
500m of 11kV cable: A-B, C-D, E-F	£150,000	2/15.4 X 100% = 13%	£19,480
11kV Circuit Breaker at Primary Substation B	£30,000	As above	£3,896
11kV jointing at Points A,B,C,D,E,F	£18,000	As above	£2,337
Total Reinforcement Cost	**£198,000**		**£25,713**

Extension Assets:	Cost	Apportionment	Customer Contribution
1200m of 11kV cable inc. strap at G – H	£360,000	n/a	£360,000
3 by 800kVA distribution substations	£225,000	n/a	£225,000
On site LV mains and services	£24,900	n/a	£24,900
4 by 11kV closing joints at POC and at points G,H	£12,000	n/a	£12,000
Total Extension Asset Cost	**£621,900**		**£621,900**

Total cost of the work = £198,000 + £621,900 = **£819,900**

Total Connection Charge to Customer = £25,713 + £621,900 = **£647,613**

Example 20: A new connection with load transfer

Purpose: Variation to Example 19 where a load transfer is required to free up capacity but no new capacity is created and demonstrates why elements become Extension Assets.

This variation of Example 19 shows the arrangements that will apply where it is necessary to reconfigure the Distribution System so that existing demand may be transferred in order to release capacity for the new connection.

A new housing development has a Required Capacity of 2MVA to serve 900 plots. The local 11kV feeder has a network capacity of 7.7MVA based upon the limitation of the existing 400 Amp circuit breakers at Primary Substation A. The existing load on the circuit is 7.6MVA. It is therefore not possible to connect the new load to this circuit as presently configured.

The figure below shows the original network.

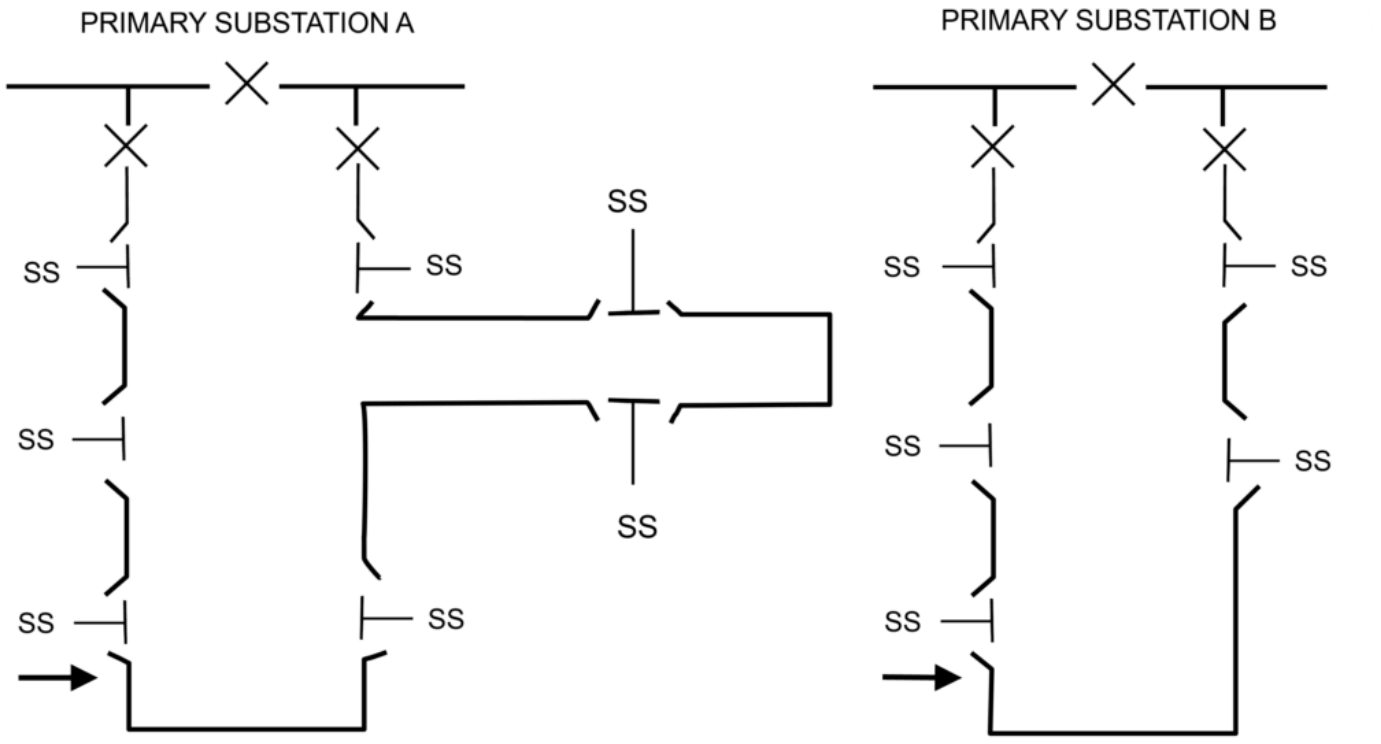

The figure below shows the proposed network.

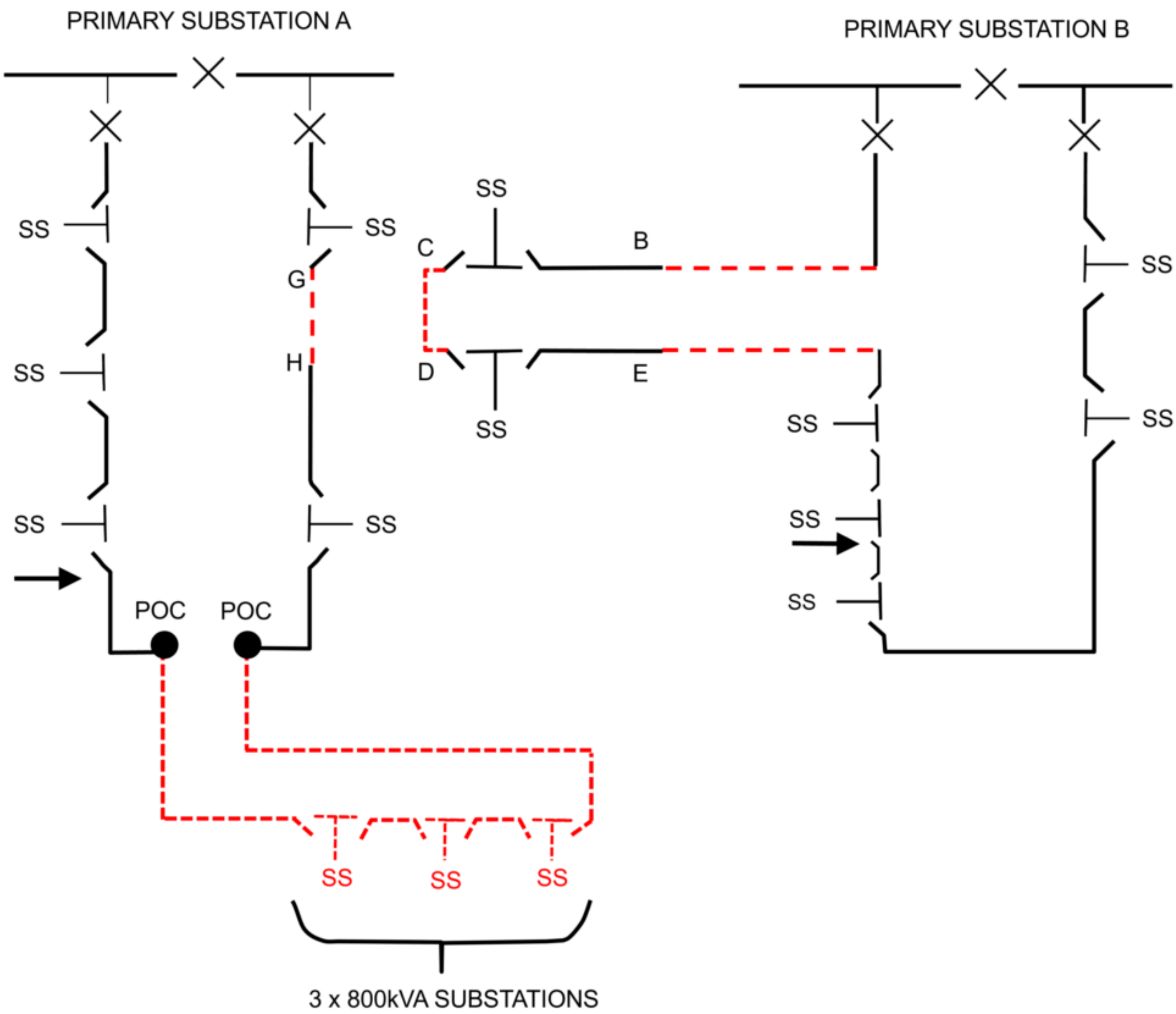

Reinforcement:

It is proposed to reconfigure the Distribution System such that two existing substations may be transferred on to an adjacent network, in order to release capacity so that the new connections can be made. Primary Substation B has sufficient spare capacity to accommodate the two existing substations. New cables are to be installed between points A – B and between points E – F. The existing circuit will be cut at point B & E so that the new joints can be made. The total new cable length between points A – B and points E - F is 100m. The network will be reconfigured by the installation of two short straps C – D and G - H in order to maintain connectivity. As this work involves the transfer of capacity there is no Reinforcement work required.

This transfer of existing demand will allow a POC to be taken from the local 11kV circuit to connect the new development. The newly installed cable to connect the development from the POC is 1200m long. Three 800kVA distribution substations are to be established onsite. The above work represents the Minimum Scheme to provide connections to the new site.

The Connection Charge for this Scheme is calculated as follows:

Extension Assets:	Cost	Apportionment	Customer Contribution
1300m of 11kV cable including A-B, C-D, E-F, G-H and from POC to the development	£390,000	n/a	£390,000
3 by 800kVA distribution substations	£225,000	n/a	£225,000
On site LV mains and services	£24,900	n/a	£24,900
10 by 11kV closing joints at POC and at points A,B,C,D,E,F,G,H	£30,000	n/a	£30,000
Total Extension Asset Cost	**£669,900**		**£669,900**

Total cost of the work = £669,900

Total Connection Charge to Customer = £669,900

Example 21: A new Generation Connection with an Enhanced Scheme at the DNO's request.

Purpose: To show how the Security CAF calculation is applied where the DNO requests an Enhanced Scheme.

Please refer to Example 11, which is the Minimum Scheme for this project. In this example, a Customer requests a Generation Connection with a Required Capacity for export purposes of 3MW. The Minimum Scheme requires the Reinforcement of 500m of 11kV overhead line between points A and B to provide 7.6MVA of capacity. However, the DNO has decided to install an Enhanced Scheme by increasing the capacity of the 11kV overhead line to 13MVA.

The POC is to the existing 11kV network at point B and it is proposed to install 500m of 11kV underground cable from the POC to the Customer's installation.

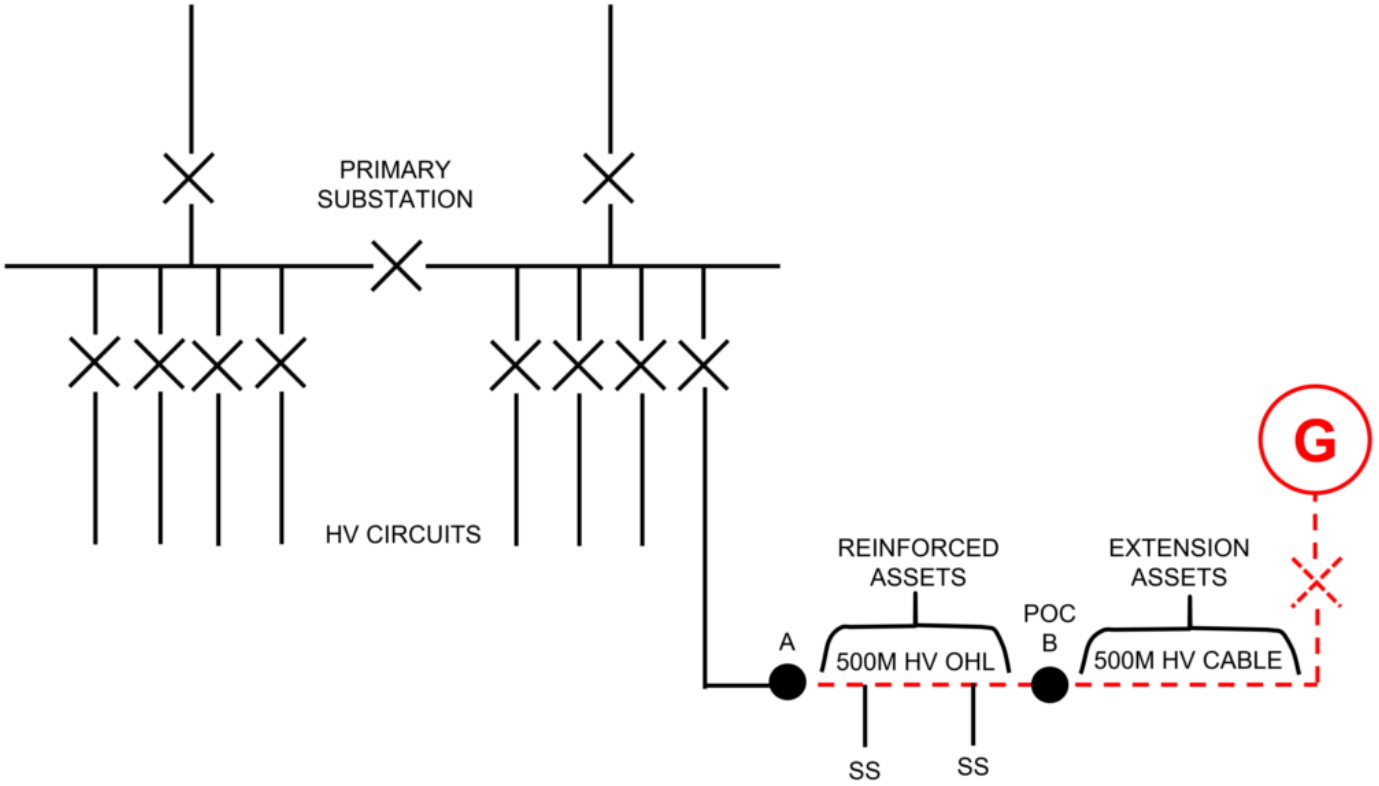

Reinforcement:

The Relevant Section of Network is the 11kV OHL between points A and B Security CAF calculation: The numerator in the CAF calculation is based upon the Required Capacity of the new generation, i.e. 3MW. In this example the DNO has decided to install an Enhanced Scheme and the Connection Charge that will apply will be the lower of the Connection Charge associated with the Minimum Scheme (see Example 11) and the Enhanced Scheme. The numerator in the CAF calculation is based upon the Required Capacity of the Customer, i.e. 3MW and the denominator is based on the Enhanced Scheme New Network Capacity following Reinforcement, i.e. 13MVA.

Fault Level CAF calculation:

This Scheme does not have any significant Fault Level contribution to the existing shared use distribution network so the Fault Level CAF is therefore not applicable here.

The Connection Charge for this Scheme is calculated as follows:

Reinforcement:	**Cost**	**Apportionment**	**Customer Contribution**
Re-conductor 500m of 11kV overhead line at a higher capacity (13MVA)	£70,000	3/13 x 100% = 23.1%	£16,170
Total Reinforcement Cost	**£70,000**		**£16,170**

Extension Assets:	**Cost**	**Apportionment**	**Customer Contribution**
Installation of 500m 11kV cable	£45,000	n/a	£45,000
11kV circuit breaker at Customer's substation	£25,000	n/a	£25,000

Total Extension Asset Cost	**£70,000**		**£70,000**

Total cost of the work = £70,000 + £70,000 = **£140,000**

Total Connection Charge to Customer = £16,170 + £70,000 = **£86,170**

Example 22: A new Generation Connection on a meshed HV distribution system requiring Reinforcement.

Purpose: To show that a contribution is required where Reinforcement is carried out at the same voltage as the Point of Connection for a Generation Connection.

A Customer requests a new Generation Connection requiring a 4MVA 11kV metered connection. The local 11kV network is of a meshed design whereby the 11kV network is supplied from single 33/11kV primary transformers via 33kV radial feeds as shown below.

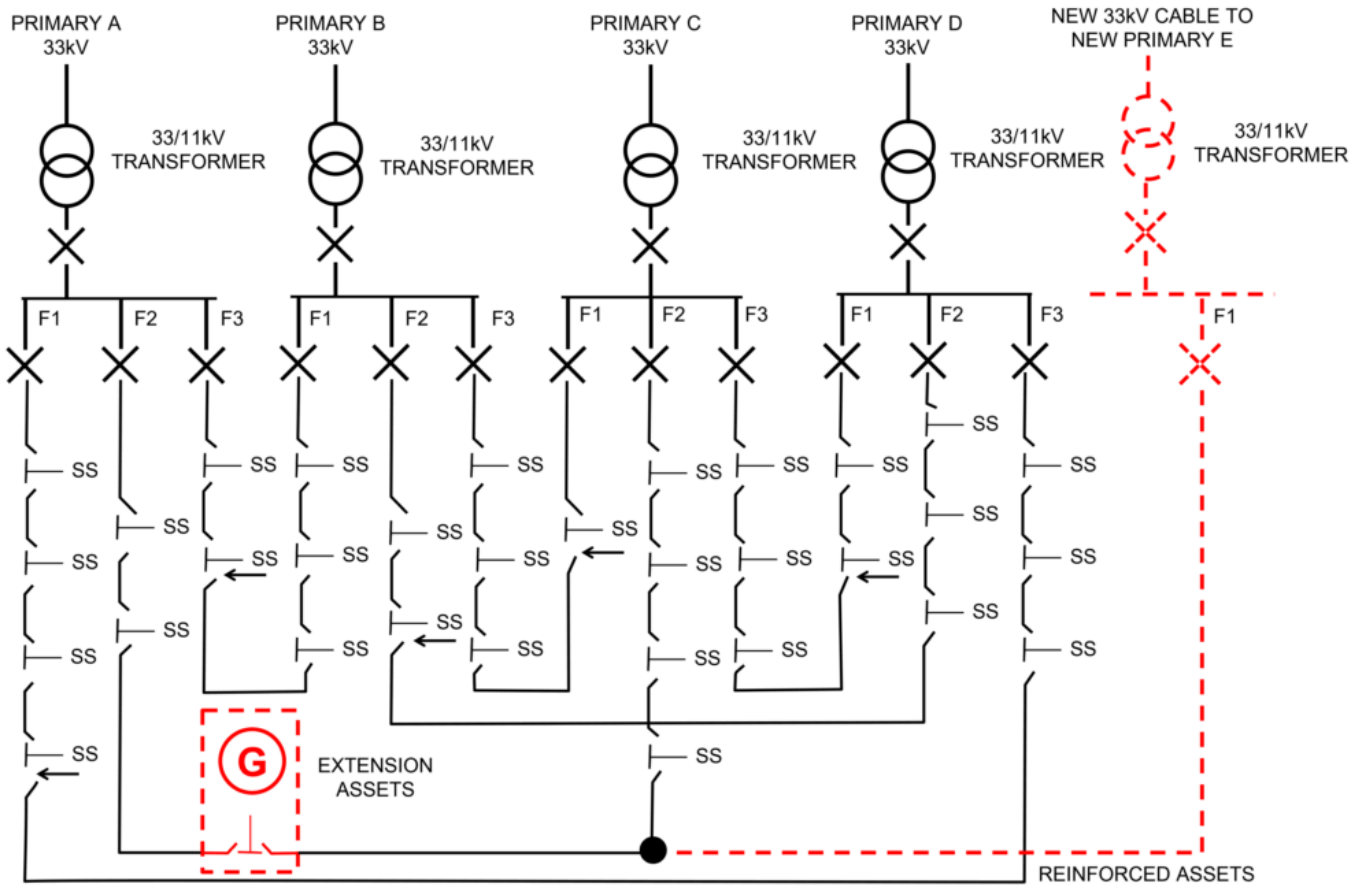

The existing network consists of four 10MVA primary transformer substations and associated 11kV switchgear. A new connection of 4MVA has been requested in the vicinity of F2 from Primary A.

The existing relevant primary transformer group is loaded to its secure capacity so the primary transformer group will require Reinforcement to enable the new connection to progress.

To provide the Required Capacity, the 11kV network will be reinforced by the installation of a new primary substation connected to the nearest 33kV circuit. The new primary substation (Primary E) will contain a 10MVA transformer,

associated 11kV switchgear and a new 11kV (7.7 MVA) cable installed to interconnect into the existing 11kV network (from F2 at Primary A to F2 at Primary C).

Reinforcement:

Security CAF calculation:

In this example there are two different Security CAFs applied. This is because the Relevant Section of Network is different when considering the New Network Capacity in respect of different elements of the Reinforcement works.

The Relevant Section of Network for the Reinforcement comprising the 11kV Cable Works:

For the 11kV cable assets the Relevant Section of Network is considered to be the secure three feeder 11kV network from Primary A (Feeder 2), Primary C (Feeder 2) and Primary E (Feeder 1). In this case the New Network Capacity (under secure N -1 conditions) following the Reinforcement works is equal to

(3 – 1) x 7.7MVA = 15.4MVA

This is due to the fact that following the Reinforcement work both of the existing circuits; Primary A, Feeder 2 and Primary C, Feeder 2 can be loaded to their full capacity and will have the newly installed clean feeder from Primary E to act as a back feed to meet the requirements of P2.

The Security CAF for these assets will therefore be 4/15.4 X 100% = 26.0%

The Relevant Section of Network for the Reinforcement comprising the Primary substation assets:

In this instance the Relevant Section of Network comprises Primary A, C and E within the group that can be used to supply the Customer in normal and abnormal conditions. The New Network Capacity of this Relevant Section of Network (under secure N -1 conditions) following the Reinforcement works is equal to 17.7MVA. (10MVA from either Primary A or Primary C and 7.7MVA from Primary E which is limited by the single 11kV cable connected to it.

The Security CAF for these assets will therefore be 4/17.7 X 100% = 22.6% towards the 11kV assets to be installed.

Due to the voltage rule, contributions will not be required towards the 33kV assets.

Fault Level CAF calculation:

This Scheme does not have any significant Fault Level contribution to the existing shared use distribution network and Fault Level CAF is therefore not applicable here.

The Connection Charge for this Scheme is calculated as follows:

Reinforcement:	**Cost**	**Apportionment**	**Customer Contribution**
500m 11kV cable from new primary substation E	£150,000	4/15.4 X 100% = 26.0%	£39,000
1 by 11kV closing joints	£3,000	As above	£780
11kV switchgear at new Primary E	£30,000	4/17.7 X 100% = 22.6%	£6,780
Primary transformer	£6,500,000	0%	£0
2.5km of 33kV cable installation	£1,000,000	0%	£0
33kV Circuit Breaker	£80,000	0%	£0
33kV Termination	£30,000	0%	£0
Total Reinforcement Cost	**£7,793,000**		**£46,560**

Extension Assets:	Cost	Apportionment	Customer Contribution
11kV ring main unit	£25,000	n/a	£25,000
11kV metering unit	£12,000	n/a	£12,000
500m of 11kV cable	£150,000	n/a	£150,000
2 by 11kV closing joints	£6,000	n/a	£6,000
Total Extension Asset Cost	**£193,000**		**£193,000**

Total cost of the work = £7,793,000 + £193,000 = **£7,986,000**

Total Connection Charge to Customer = £46,560 + £193,000 = **£239,560**

Example 23: A non-secure Generation Connection with non-secure Reinforcement.

Purpose: To show that a contribution is required where Reinforcement is carried out at the same voltage as the Point of Connection for a Generation Connection in relation to a non-secure system.

A Customer wishes to connect a new generator (a Generation Connection) with a Required Capacity for export purposes of 5 MVA. The connection of the generator requires the installation of 1,000m of 33kV cable and a 33kV metering circuit breaker, these being Extension Assets. An existing spare circuit breaker at the substation is utilised which, in this case, is not chargeable to the Customer.

As there is insufficient capacity in the existing 24.0 MVA thermal capacity rated 33kV feeder for the new generation due to the presence of existing generation, the connection also requires the installation of a new 33kV feeder, which also has a thermal capacity of 24.0 MVA, as Reinforcement. This is the Minimum Scheme as it is cheaper to do this, to the extent as shown in the diagram below, rather than upgrade the existing 33kV feeder to the same point along it.

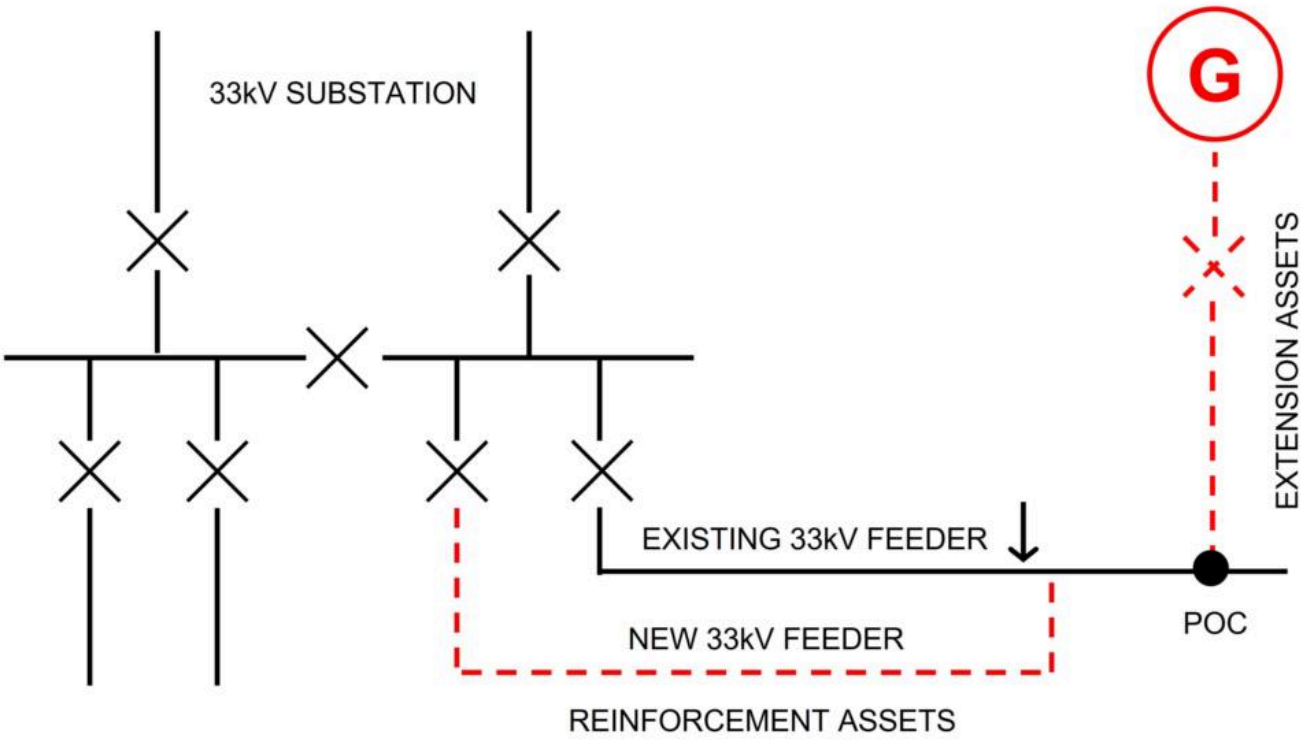

Reinforcement:

The numerator in the CAF calculation is the Required Capacity of the new generator, which is 5.0 MVA.

The RSN in this case is the existing 33kV feeder and the new 33kV feeder. The New Network Capacity is calculated using the non-secure capacity and is therefore the sum of the thermal capacities of the two feeders, which is 48.0 MVA. This is the denominator in the CAF calculation.

The Connection Charge for this Scheme is calculated as follows:

Reinforcement:

Reinforcement:	**Cost**	**Apportionment**	**Customer Contribution**
Installation of new 33kV feeder	£500,000	5.0 / 48.0 x 100% = 10.4%	£52,000
Total Reinforcement Cost	**£500,000**		**£52,000**

Extension Assets:	**Cost**	**Apportionment**	**Customer Contribution**
Installation of 1,000m 33kV cable	£400,000	n/a	£400,000
Installation of 33kV metering circuit breaker	£80,000	n/a	£80,000
11kV Jointing x2	£6,000	n/a	£6,000
Total Extension Asset Cost	**£486,000**		**£486,000**

Total cost of the work = £500,000 + £486,000 = **£986,000**

Total Connection Charge to Customer = £52,000 + £486,000 = **£538,000**

Example 24: A new non-secure Generation Connection with secure Reinforcement.

Purpose: To show the application of the apportionment rule where secure Reinforcement is provided but the connection for a Generation Connection is non-secure.

A Customer applies for a new generator (a Generation Connection) requiring an 8 MW metered connection. In this case, the Customer has exercised their option to request non-secure Extension Assets in the provision of the connection.

The existing network comprises a substation which has 2 x 15 MVA 33/11kV transformers. The Minimum Scheme to provide the connection is to install 750m of 11kV cable from the substation to the industrial premises, as Extension Assets. As there is insufficient capacity available from the existing 2 x 15 MVA transformers to provide the new connection, it will be necessary to upgrade the transformers to 2 x 24 MVA units along with their associated 11kV circuit breakers. The Reinforcement is required to ensure the 11kV network load can be maintained during planned or unplanned outages of one of the transformers. Although the Customer wishes to accept a non-secure connection, the substation must provide secure capacity to its Group Demand (which includes the Customer) to comply with the requirements of Engineering Recommendation P2. As the Extension Assets will be provided solely for the Customer, these can be provided on the basis of a single circuit to provide a non-secure connection, at the Customer’s request.

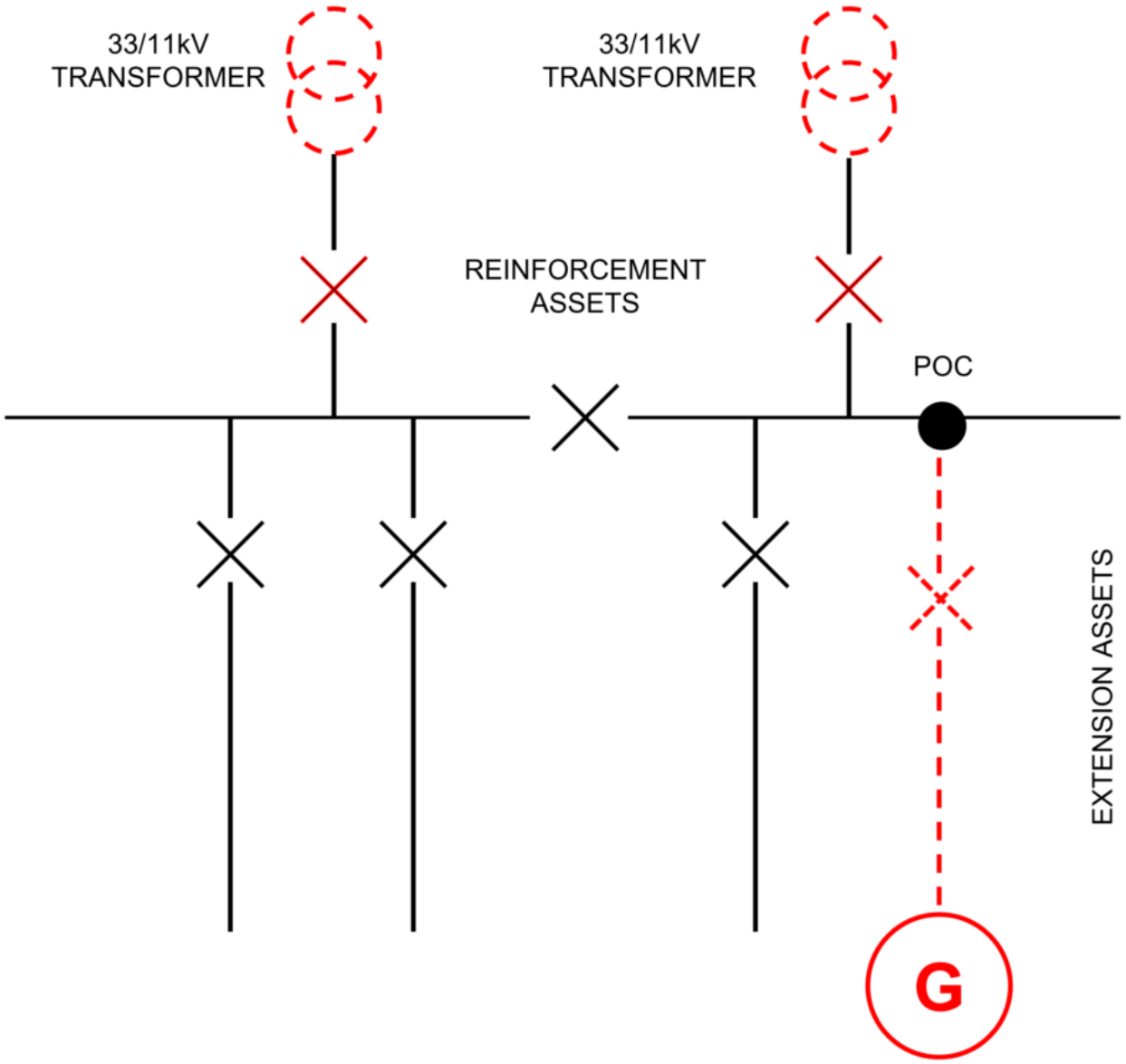

Reinforcement:

As the transformer Reinforcement is a voltage above, the generator will not contribute towards this part of the works.

The numerator in the CAF calculation is the Required Capacity, which is 8.0 MVA.

The New Network Capacity is the secure capacity of the transformers, which is 24 MVA. This is the denominator in the CAF calculation.

The Connection Charge for this Scheme is calculated as follows:

Reinforcement:	**Cost**	**Apportionment**	**Customer Contribution**
Installation of 2 x 24MVA 33/11kV transformers	£6,500,000	0%	£0
2 x 11kV circuit breakers	£60,000	8 / 24 x 100% = 33.3%	£20,000
Total Reinforcement Cost	**£6,560,000**		**£20,000**

Extension Assets:	**Cost**	**Apportionment**	**Customer Contribution**
750m 11kV cable	£225,000	n/a	£225,000

11kV metering circuit breaker	£30,000	n/a	£30,000
11kV joints x2	£6,000	n/a	£6,000
Total Extension Asset Cost	**£261,000**		**£261,000**

Total cost of the work = £6,560,000 + £261,000 = **£6,821,000**

Total Connection Charge to Customer = £20,000 + £261,000 = **£281,000**

Example 25: A new Generation Connection with voltage rise triggered Reinforcement.

Purpose: To show that a Generation Connection pays for Reinforcement at the voltage level of connection based on the CAF.

A Customer wishes to connect a new generator (a Generation Connection) with a Required Capacity for export purposes of 2MVA.

The local 11kV feeder has a large amount of generation already connected and will need to be reinforced in order to keep voltage rise within acceptable limits.

The Minimum Scheme requires Reinforcement of the existing 185mm^2 11kV underground cable with 300mm^2 underground cable and installation of a new substation for connection of the 2MW export capacity. The total length of the reinforced cable is 2km. The thermal rating of the 300mm^2 underground cable is 8MVA. The 11kV underground cable on the other side of the normal open point is already 300mm^2 and does not require to be reinforced.

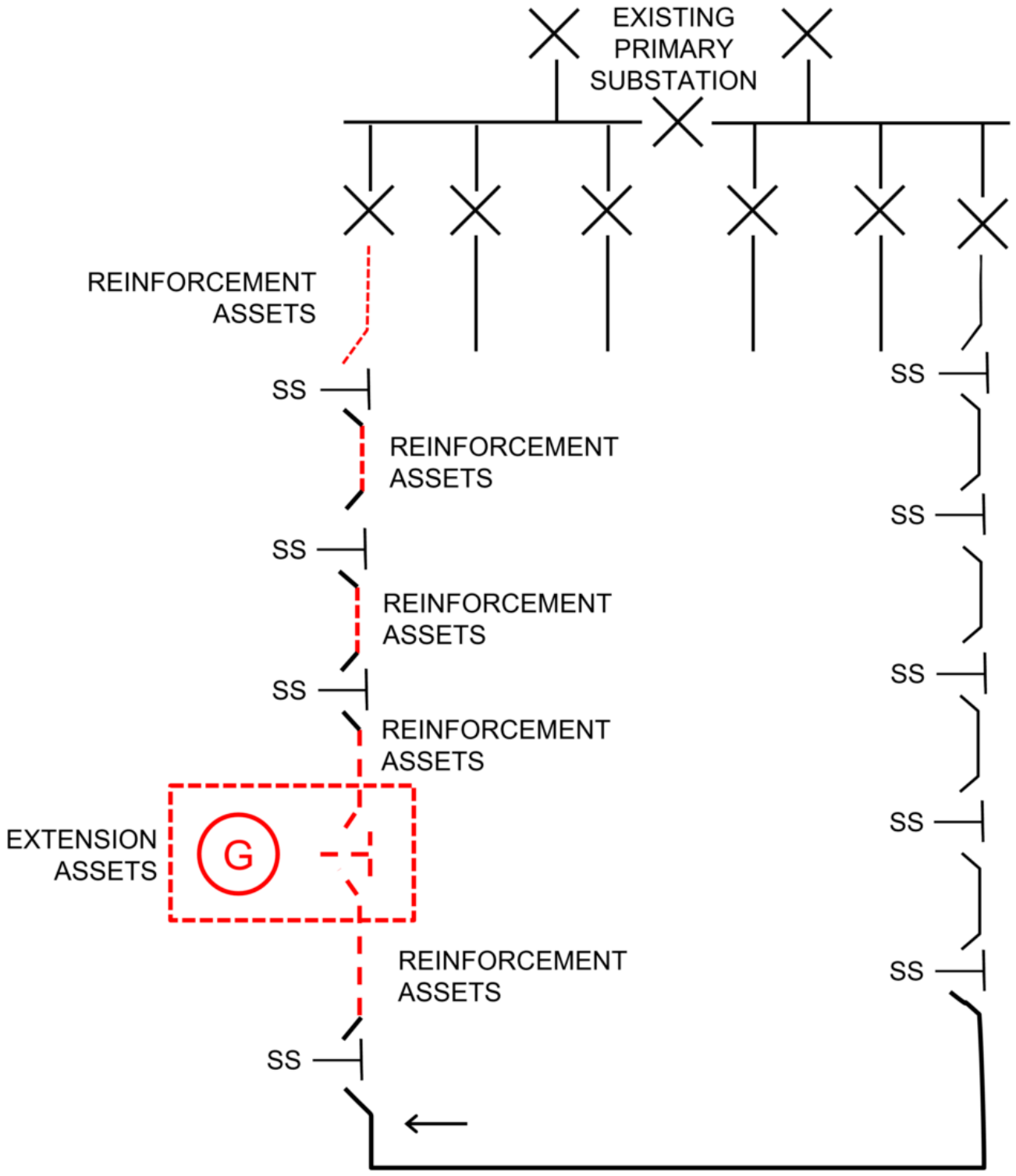

Reinforcement:

The Relevant Section of Network for the Reinforcement is the 11kV feeder.

Security CAF calculation: the numerator in the CAF calculation is the Required Capacity of the Customer, i.e. 2MW. The denominator is the New Network Capacity following Reinforcement, this being the maximum generation that could be connected whilst keeping the voltage rise within acceptable limits, i.e. 8MVA in this case.

Fault Level CAF calculation: this scheme does not have any significant Fault Level contribution to the existing shared use distribution network and Fault Level CAF is therefore not applicable here.

The Connection Charge for this Scheme is calculated as follows:

Reinforcement:	**Cost**	**Apportionment**	**Customer Contribution**
2km 300mm 11kV Cable	£600,000	2 / 8 x 100% = 25%	£150,000
Total Reinforcement Cost	**£600,000**		**£150,000**

Extension Assets:	**Cost**	**Apportionment**	**Customer Contribution**
2MVA 11kV Substation	£160,000	n/a	£160,000
2 by 11kV Closing Joints	£6,000	n/a	£6,000
Total Extension Asset Cost	**£166,000**		**£166,000**

Total cost of the work = £600,000 + £166,000 = **£766,000**

Total Connection Charge to Customer = £150,000 + £166,000 = **£316,000**

Example 26: A new Generation Connection with voltage rise triggered Reinforcement.

Purpose: To show that if voltage rise Reinforcement is tailored so that just the amount of network is upgraded to meet the Customer requirements, the CAF is 100% for a Generation Connection.

A Customer wishes to connect a new generator (a Generation Connection) with a Required Capacity for export of 250kW. The Minimum Scheme for connection of the generator requires the local 11kV overhead line to be reinforced with 100mm^2 conductor over part of its length in order to keep voltage rise within acceptable limits. The thermal capacity of the 100mm^2 overhead line is 5MVA. The thermal capacity of the original 50mm^2 overhead line is 3MVA. A new 315kVA ground mounted substation requires to be installed at the premises. The overhead line is 1km in length but only 500m is required to be reinforced in order to keep voltage rise within acceptable limits.

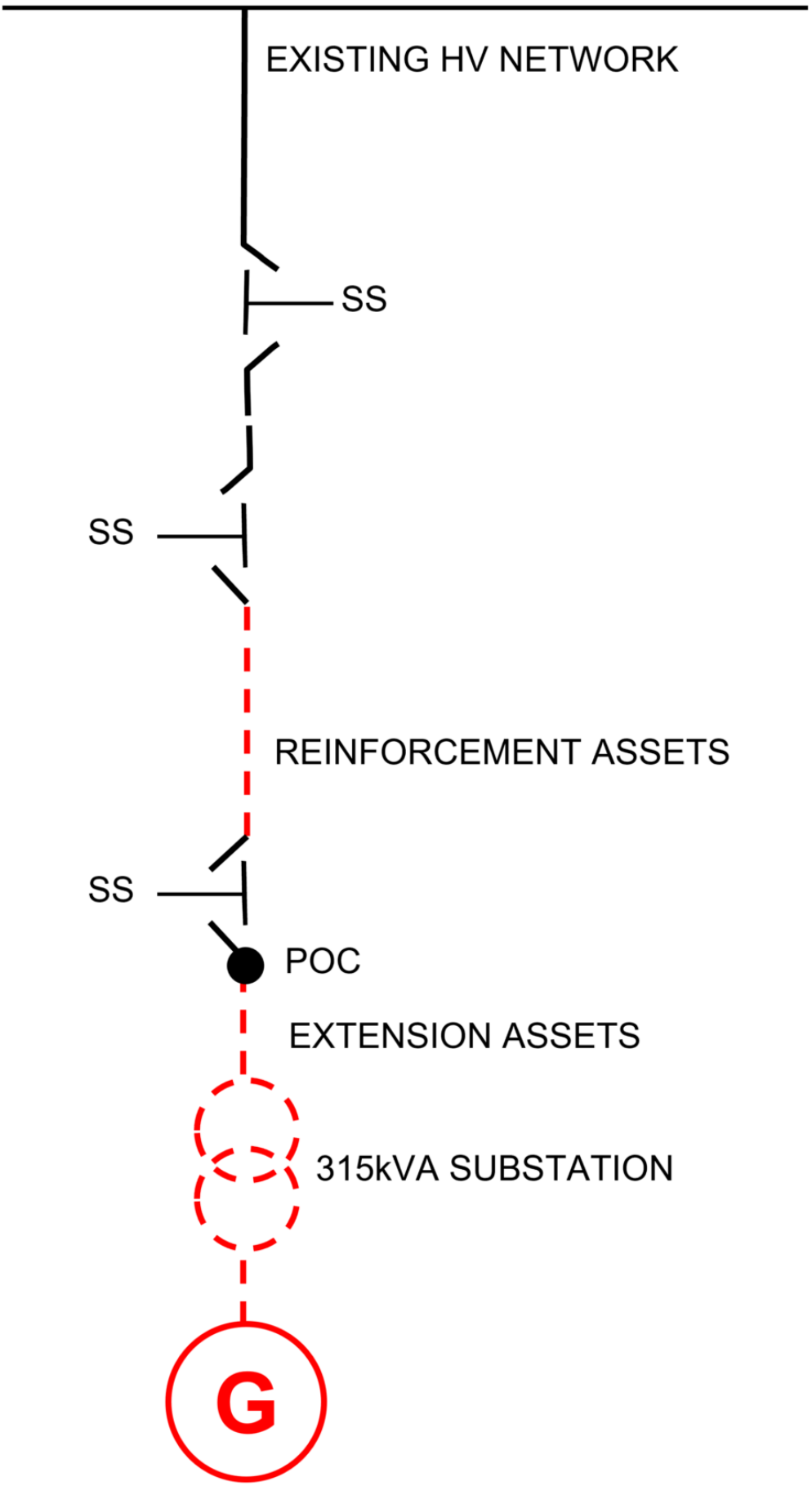
EXISTING HV NETWORK
SS
SS
REINFORCEMENT ASSETS
SS
POC
EXTENSION ASSETS
315kVA SUBSTATION
G

Reinforcement:

The Relevant Section of Network for the Reinforcement is the 11kV overhead line

Security CAF calculation: the numerator in the CAF calculation is the Required Capacity of the Customer, i.e. 250kW. The denominator is the New Network Capacity following Reinforcement, this being the maximum generation that could be connected whilst keeping the voltage rise within acceptable limits. As the length of overhead line to be reinforced has been determined to accommodate the 250kW requirement only, then this is also 250kW in this case.

Fault Level CAF calculation: this scheme does not have any significant Fault Level contribution to the existing shared use distribution network and Fault Level CAF is therefore not applicable here.

The Connection Charge for this Scheme is calculated as follows:

Reinforcement:	**Cost**	**Apportionment**	**Customer Contribution**
Replacement 11kV overhead line conductor	£40,000	250 / 250 x 100% = 100%	£40,000
Total Reinforcement Cost	**£40,000**		**£40,000**

Extension Assets:	**Cost**	**Apportionment**	**Customer Contribution**
Provision and installation of 315kV substation	£60,000	n/a	£60,000
11kV joint to network	£3,000	n/a	£3,000
Total Extension Asset Cost	**£63,000**		**£63,000**

Total cost of the work = £40,000 + £63,000 = **£103,000**

Total Connection Charge to Customer = £40,000 + £63,000 = **£103,000**

Example 27: A new Generation Connection with Fault Level Triggered Reinforcement and transmission works.

Purpose: To show how the Fault Level CAF calculation is applied and how the cost of transmission works are treated for a Generation Connection.

A Customer requests a 65MW connection for a new 132kV generator (a Generation Connection) and the 85MVA Fault Level contribution from the generator necessitates Reinforcement works to replace the 132kV switchgear at the existing grid supply point with switchgear of a higher fault level rating. The Fault Level contribution also requires upgrades to the transmission system to replace the 132kV transformer tails and associated switchgear. New 132kV Extension Assets from the existing 132kV system will be required to connect the generator.

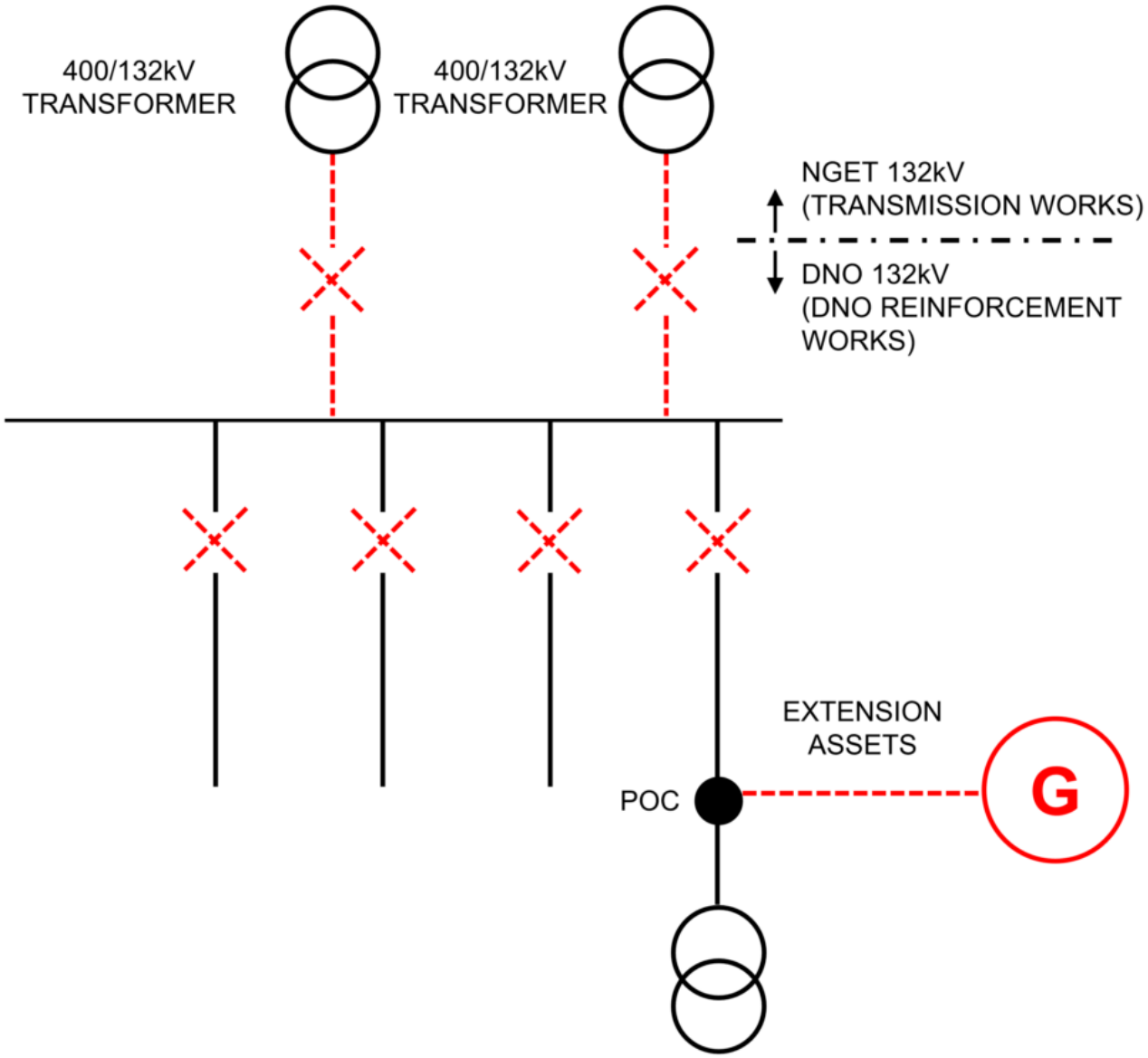

Reinforcement

In this example the Reinforcement is at the voltage level of the POC and the Fault Level CAF is applied to the DNO works only.

Fault Level CAF calculation: The numerator in the CAF calculation is based upon the Fault Level contribution from the Customer's new generator connection, i.e. 85MVA. The denominator is based upon the New Fault Level Capacity, in this Example the Fault Level capacity of the new 132kV switchgear, i.e. 9,140MVA.

Transmission

The cost of the transmission works is fully funded by the Customer.

The Connection Charge for this Scheme is calculated as follows:

Transmission Works:	Cost	Apportionment	Customer Contribution
Replace the 132kV transformer tails and associated switchgear	£5,000,000	N/A	£5,000,000

Total Transmission Cost	**£5,000,000**		**£5,000,000**

Reinforcement:	**Cost**	**Apportionment**	**Customer Contribution**
Reinforcement: replace the existing 132kV switchgear	£10,000,000	3x(85/9140) x 100% = 2.8%	£280,000
Total Reinforcement Cost	**£10,000,000**		**£280,000**

Extension Assets:	**Cost**	**Apportionment**	**Customer Contribution**
Installation of 200m 132kV underground cable	£400,000	N/A	£400,000
Total Extension Asset Cost	**£400,000**		**£400,000**

Total cost of the work = £5,000,000 + £10,000,000 + £400,000 = **£15,400,000**

Total Connection Charge to Customer = £5,000,000 + £280,000 + £400,000 = **£5,680,000**

This same principle would apply in Scotland where there is no 132kV Distribution System and the connection Customer would pay for any transmission works they trigger.

Example 28: A new Generation Connection with Fault Level Triggered Reinforcement and transmission works.

Purpose: To show the treatment of Reinforcement costs at more than one voltage level above the POC and the cost of transmission works for a Generation Connection.

A Customer requests a 50MW connection for a new 33kV generator (a Generation Connection) and the 75MVA Fault Level contribution from the generator necessitates Reinforcement works to replace the 132kV switchgear at the existing grid supply point with switchgear of a higher fault level rating. The Fault Level contribution also requires upgrades to the transmission system to replace the 132kV transformer tails and associated switchgear. New 33kV Extension Assets from the existing 33kV system will be required to connect the generator.

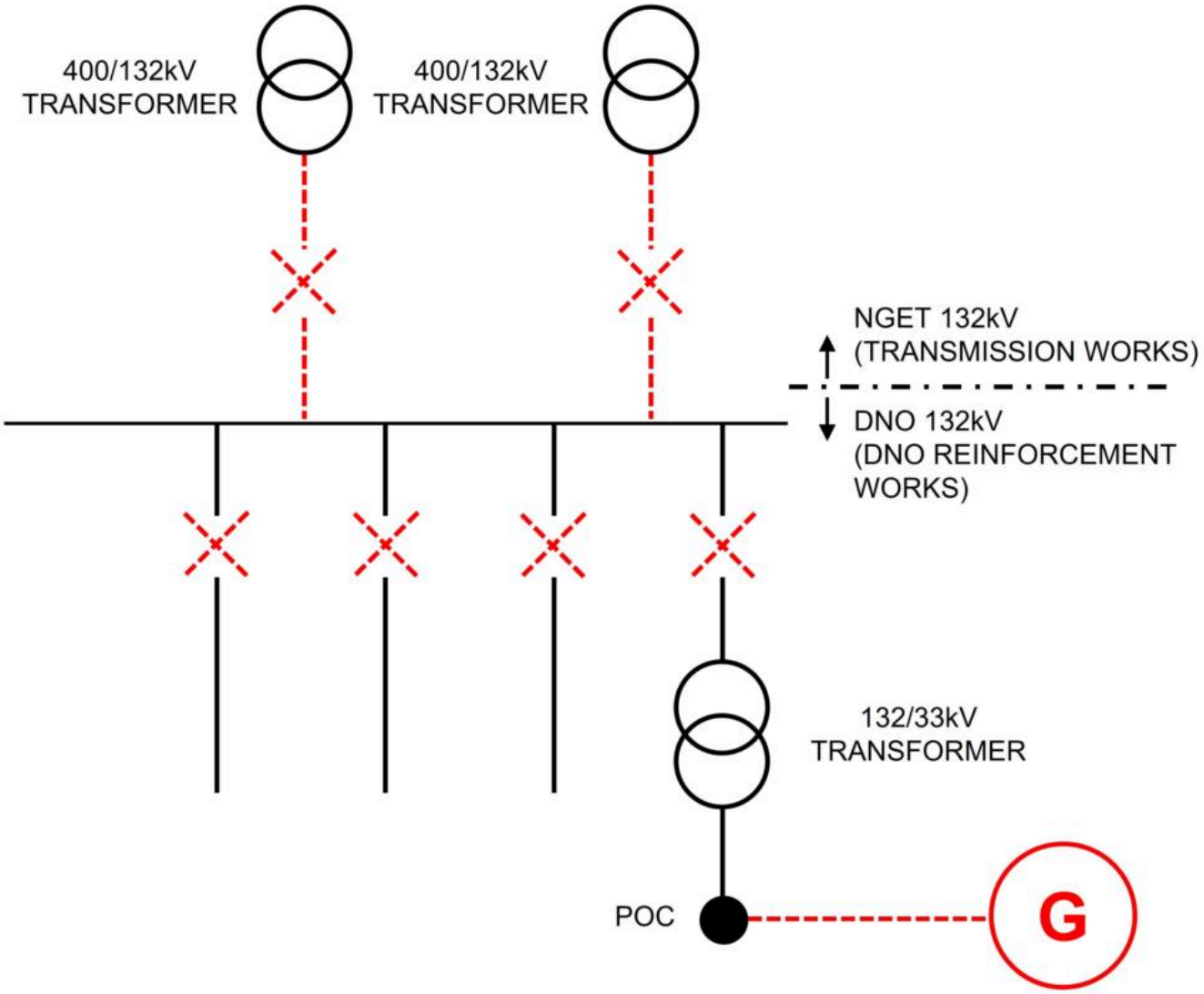

Reinforcement

In this example the Reinforcement is at the voltage level above the POC and fully funded by the DNO.

Transmission

The Connection Charge for this Scheme is calculated as follows:

Transmission Works:	**Cost**	**Apportionment**	**Customer Contribution**
Replace the 132kV transformer tails and associated switchgear	£5,000,000	N/A	£5,000,000
Total Transmission Cost	**£5,000,000**		**£5,000,000**

Reinforcement:	**Cost**	**Apportionment**	**Customer Contribution**
Replacement 132kV switchboard (excluding Customer's sole use circuit breaker)	£10,000,000	N/A	£0
Total Reinforcement Cost	**£10,000,000**		**£0**

Extension Assets:	Cost	Apportionment	Customer Contribution
Installation of a 500m 33kV cable	£40,000	N/A	£40,000
33kV circuit breaker at Customer substation	£25,000	N/A	£25,000
Total Extension Asset Cost	**£75,000**		**£75,000**

Total cost of the work = £5,000,000 + £10,000,000 + £75,000 = **£15,075,000**

Total Connection Charge to Customer = £5,000,000 + £75,000 = **£5,075,000**

This same principle would apply in Scotland where there is no 132kV Distribution System and the connection Customer would pay for any transmission works they trigger.

Example 29: A new Demand Connection that has Reinforcement above the High-Cost Project Threshold.

Purpose: To show how the Demand High-Cost Project Threshold is applied.

A Customer wishes to connect a new supply to a commercial premise for 70kVA (the Required Capacity). This will be a non-secure Demand Connection to a secure network.

The Minimum Scheme is to overlay part of the nearest 11kV circuit (Feeder 2) which only has spare capacity of 50kVA. The Reinforcement to make the capacity available requires 1200m of existing 11kV cable to be overlaid with a larger capacity cable.

Following the Reinforcement the New Network Capacity will be 8000kVA. (i.e. after Reinforcement, in this particular case, the section of cable with the lowest rating in the ring represented by Feeder 1 and Feeder 2 is rated at 8000kVA).

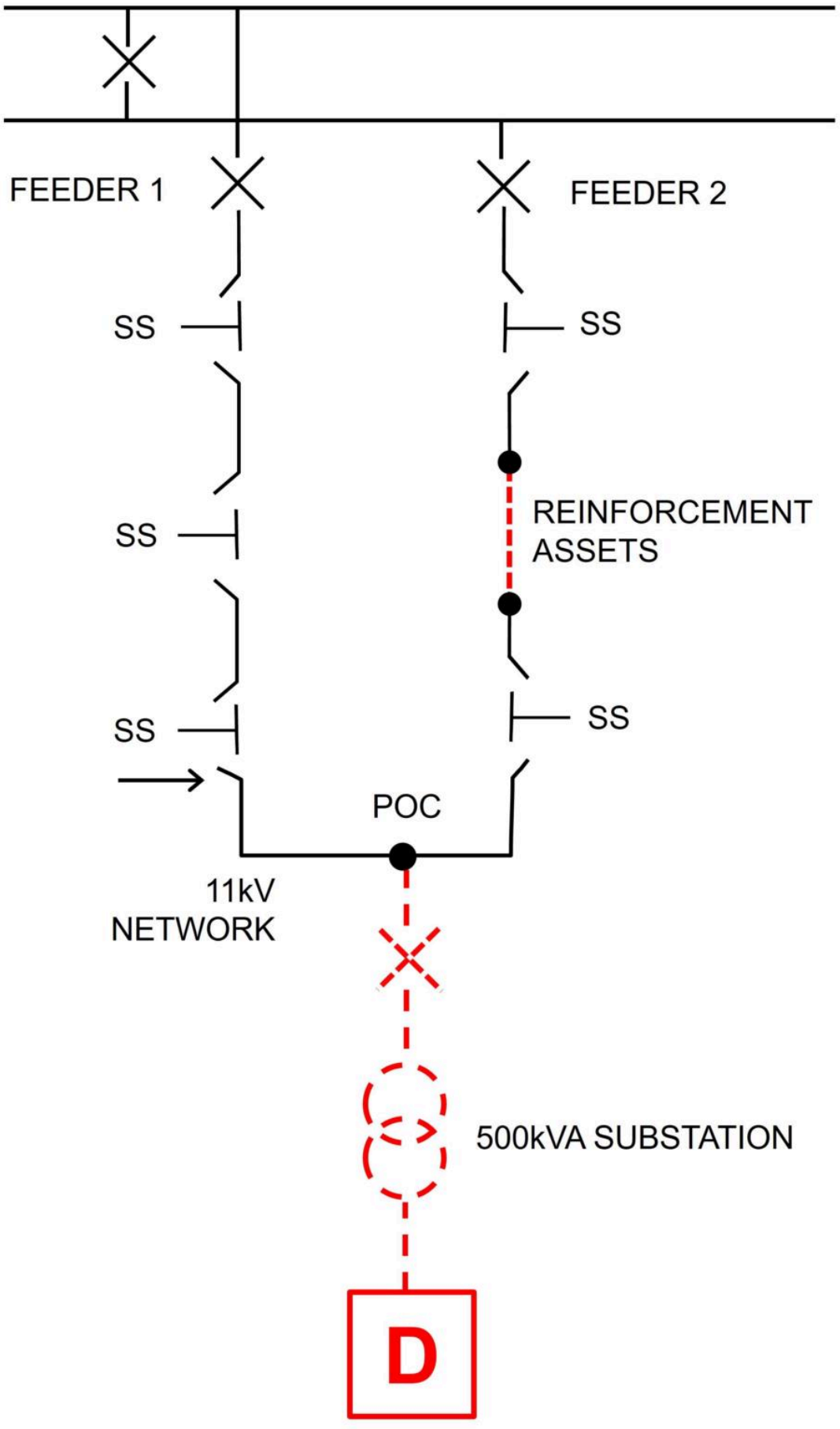
FEEDER 1
FEEDER 2
SS
SS
SS
SS
SS
REINFORCEMENT
ASSETS
POC
11kV
NETWORK
500kVA SUBSTATION
D

Reinforcement:

The Relevant Section of Network is the two-feeder ring comprising Feeder 1 and Feeder 2.

As this is a Demand Connection, no CAF contribution is required.

The High-Cost Project Threshold (HCPT) applied is the Required Capacity x HCPT of £1,720 per kVA.

In this instance; 70 x £1,720 = £120,400.

The Customer will pay the costs in excess of £120,400 for works up to one voltage above the Point of Connection, therefore £363,000 (i.e, total Reinforcement cost - £120,400 = £242,600.

The Connection Charge for this Scheme is calculated as follows:

Reinforcement:	**Cost**	**Apportionment**	**Customer Contribution**
Overlay 1200m of 11kV cable	£360,000	Total cost exceeding HCPT	£242,600
11kV Jointing	£3,000	£363,000-£120,400	
Total Reinforcement Cost	**£363,000**		**£242,600**

Extension Assets:	**Cost**	**Apportionment**	**Customer Contribution**
500m 11kV cable	£150,000	n/a	£150,000
500kVA substation	£70,000	n/a	£70,000
Termination of Customer's LV cable	£2,000	n/a	£2,000
LV Metering panel	£4,000	n/a	£4,000
11kV Jointing x2	£6,000	n/a	£6,000
Total Extension Asset Cost	**£232,000**		**£232,000**

Total cost of the work = £363,000 + £232,000 = **£595,000**

Total Connection Charge to Customer = £242,600 + £232,000 = **£474,600**

Example 30: A new Generation Connection that has Reinforcement above the High-Cost Project Threshold.

Purpose: To show how a Generation Connection that triggers the Generation High-Cost Project Threshold is charged when the Reinforcement required is at the same voltage of connection.

A Customer wishes to connect a 225kVA wind farm (a Generation Connection).

In order to connect the wind farm the Minimum Scheme involves the installation of 590m of 11kV overhead line, 350m of 11kV cable and associated jointing and install switchgear into the substation. In addition, Reinforcement is required to replace the 33/11kV transformer to facilitate reverse power flow and the 11kV circuit breaker in the primary substation. The New Network Capacity following Reinforcement is 19,700kVA. The total cost of the Reinforcement is £505,400.

The High-Cost Project Threshold (HCPT) applies to this connection. The HCPT is £200/kW and costs in excess of this threshold will be charged in full to the Customer.

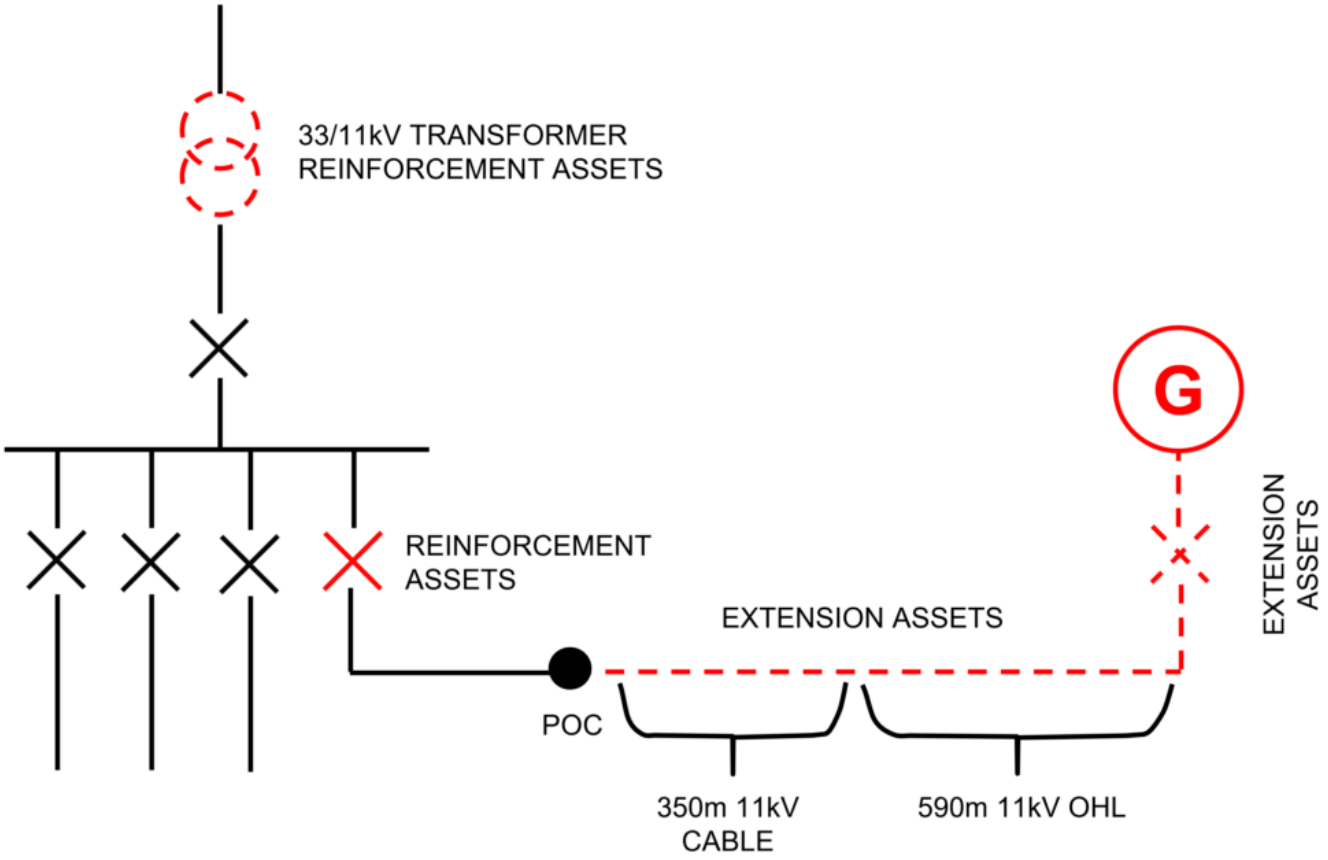

Reinforcement:

Security CAF calculation: the numerator in the CAF calculation is the Required Capacity of the Customer, i.e. 225kVA. The denominator is the New Network Capacity following Reinforcement, this being the maximum generation that could be connected whilst keeping the voltage rise within acceptable limits. This is 19,700kVA.

The High-Cost Project Threshold for Generation Connections is £200/kW.

The Reinforcement required to provide the connection is:

- 33/11kV transformer; and
- 11kV circuit breaker.

The 33/11kV transformer Reinforcement is one Voltage Level above the POC and not subject to the Security CAF. The work is covered by the High-Cost Project Threshold of £200/kW.

HCPT: £200 x 225 = £45,000

£505,400 - £45,000 = £460,400 Customer Contribution

The 11kV circuit breaker Reinforcement of £30,000 is at the Voltage Level of the POC and is subject to the Security CAF. The work is under the High-Cost Project Threshold of £45,000 (£200 x 225) and not covered.

Security CAF: (225/19,700) x 100 = 1.14%

£30,000 x 1.14% = £342 Customer Contribution

The Connection Charge for this Scheme is calculated as follows:

Reinforcement Over High-Cost Project Threshold:	**Cost**	**Apportionment / HCPT**	**Customer Contribution**
33/11kV Transformer Replacement	£475,400	£505,400 - £45,000 =	£460,400
11kV circuit breaker	£30,000	£460,400	
Total Reinforcement Cost	£505,400		**£460,400**

Reinforcement Under High-Cost Project Threshold:	**Cost**	**Apportionment / HCPT**	**Customer Contribution**
11kV circuit breaker	£30,000	225/19,700 = 1.14%	£342
Total Reinforcement Cost	£30,000		**£342**

Extension Assets:	**Cost**	**Apportionment**	**Customer Contribution**
Electrical substation works	£34,500	n/a	£34,500
Install 590m of 11kV Overhead Line	£53,500	n/a	£53,500
Install 350m of 11kV XLPE cable	£14,000	n/a	£14,000
Total Extension Asset Cost	**£102,000**		**£102,000**

Total cost of the work = £505,400 + £102,000 = **£607,400**

Total Connection Charge to Customer = £460,400 + £342 + £102,000 = **£562,742**

Example 31: The Customer requirements for supply characteristics are greater than the Minimum Scheme.

Purpose: To illustrate that when a Customer specifically requests a three-phase connection, where the existing network is not of a sufficient number of phases, the Customer pays for any Reinforcement.

A Customer with an existing single phase domestic connection with rated at 100 Amps (23 kVA) requests a three-phase connection to allow them to connect a three-phase load (e.g. a three-phase domestic welder). The property is located halfway along on a single phase 100m LV overhead line, which connects to a single phase 50kVA pole-top transformer feeding four properties. The pole-top transformer connects to the local Primary substation via a three-phase underground cable.

The existing network has sufficient capacity to accommodate the Required Capacity but the existing 50kVA pole-top transformer and 100m LV overhead line do not have a sufficient number of phases.

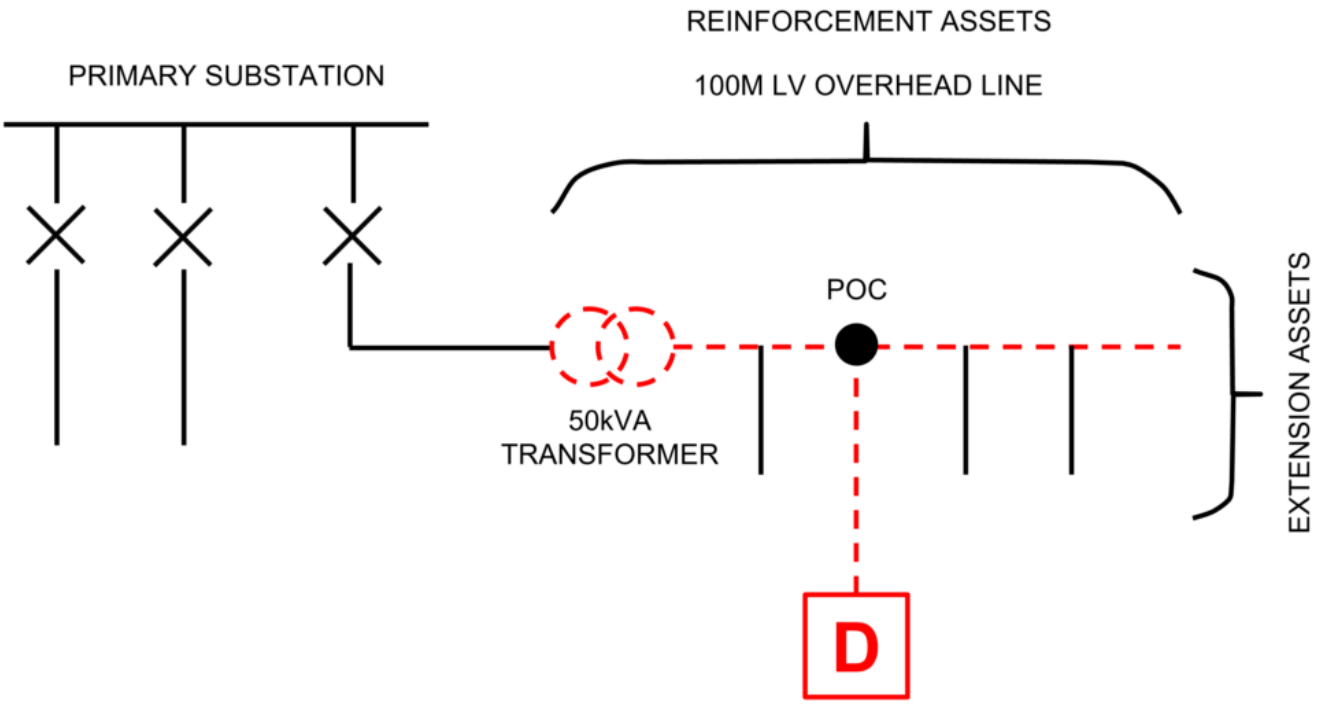

Reinforcement:

The Minimum Scheme is to replace the existing 100m LV overhead line in its entirety with a three-phase overhead line. The existing single phase 50kVA pole-top transformer will need to be replaced with a three-phase equivalent. The existing three-phase cable feed and the Primary substation are of sufficient capacity.

As the Reinforcement is only to accommodate the required number of phases, no cost apportionment will be applied.

The Connection Charge for this Scheme is calculated as follows:

Reinforcement:	**Cost**	**Apportionment**	**Customer Contribution**
Replace existing single-phase LV Overhead Line with new 100m three-phase LV Overhead Line	£12,600	100%	£12,600
New three-phase 50kVA pole-top transformer	£20,000	100%	£20,000
LV Jointing	£300	100%	£300
Total Reinforcement Cost	**£32,900**		**£32,900**
Operation & Maintenance @32%* of £32,900	**£10,528**		**£10,528**

*Note, the 32% Operation and Maintenance figure is illustrative.

Extension Assets:	**Cost**	**Apportionment**	**Customer Contribution**
New 30m three-phase 100A service	£1,600	n/a	£1,600
Single service breach joint	£300	n/a	£300
Total Extension Asset Cost	**£1,900**		**£1,900**

Total cost of the work = £43,428 + £1,900 = **£45,328**

Total Connection Charge to Customer = £43,428 + £1,900 = **£45,328**

Example 32: A new Generation Connection that has Reinforcement costs above the High-Cost Project Threshold at the Voltage Level of the POC (single asset to be cost apportioned).

Purpose: To show how a Generation Connection that triggers the Generation High-Cost Project Threshold at the Voltage Level of the POC is charged when the Reinforcement required is for a single asset at the same Voltage Level of connection.

As in Example 30, a Customer wishes to connect a 225kW wind farm (a Generation Connection).

To connect the wind farm, the Minimum Scheme involves the installation of 590m of 11kV overhead line, 350m of 11kV cable and associated jointing and install switchgear into the substation. In addition, Reinforcement is required to replace the 33/11kV transformer to facilitate reverse power flow and the 11kV circuit breaker in the primary substation. The New Network Capacity following Reinforcement is 19,700 kVA. The total cost of the Reinforcement is £525,400.

The High-Cost Project Threshold is exceeded for this connection. The HCPT is £200/kW (£45,000) and costs in excess of this threshold will be charged in full to the Customer (£480,400).

The cost of Reinforcement at the Voltage Level of the POC (£50,000) exceeds the High-Cost Project Threshold. The cost of Reinforcement to be apportioned at the Voltage Level of the POC is therefore scaled down by the amount over the High-Cost Project Threshold at that Voltage Level.

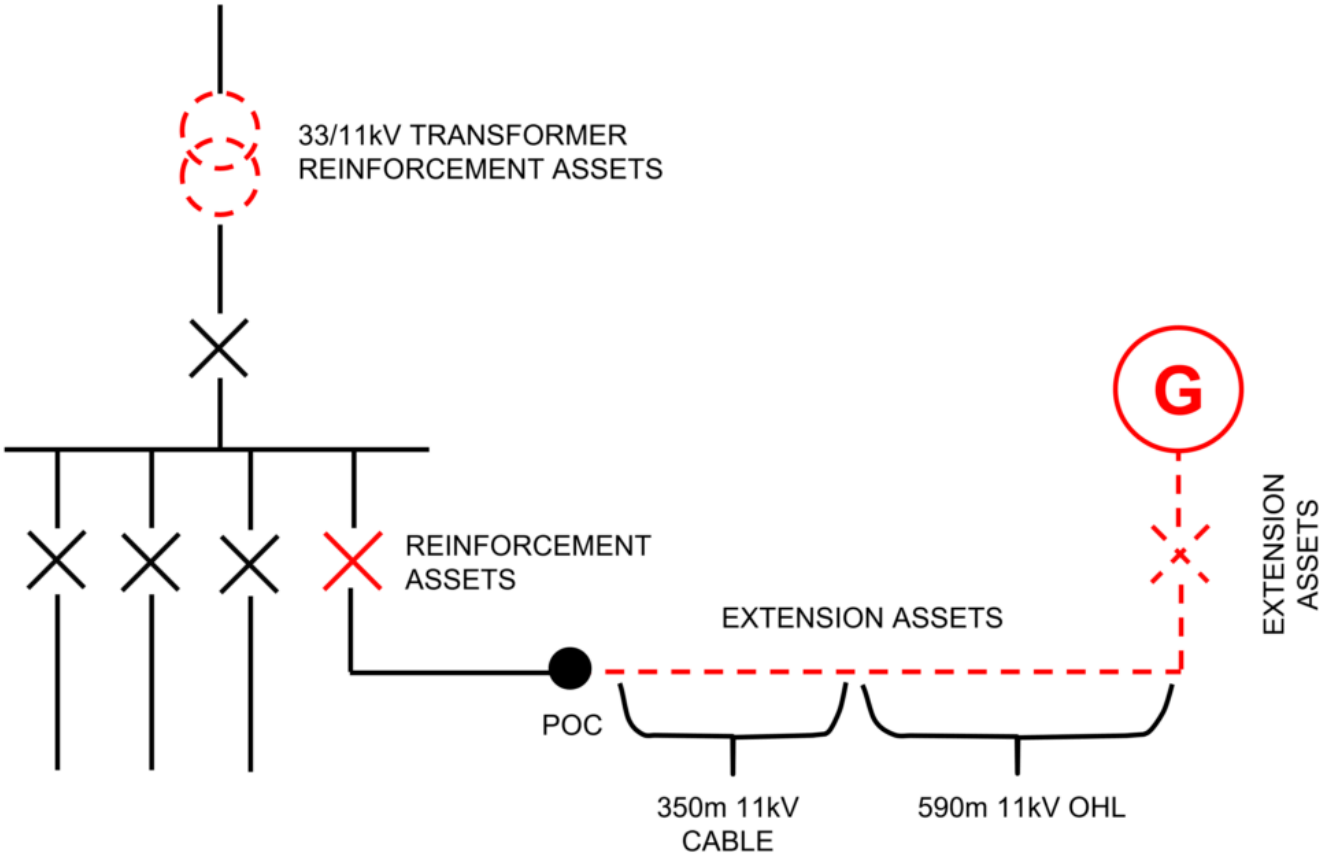

Reinforcement:

Security CAF calculation: the numerator in the CAF calculation is the Required Capacity of the Customer, i.e. 225kW. The denominator is the New Network Capacity following Reinforcement, this being the maximum generation that could

be connected whilst keeping the voltage rise within acceptable limits. This is 19,700kVA.

The High-Cost Project Threshold for a Generation Connection is £200/kW.

The Reinforcement required to provide the connection is:

- 33/11kV transformer; and
- 11kV circuit breaker.

The 33/11kV transformer Reinforcement is one Voltage Level above the POC and not subject to the Security CAF. The work is covered by the High-Cost Project Threshold of £200/kW.

HCPT: £200 x 225 = £45,000

£525,400 - £45,000 = £480,400 Customer Contribution

The 11kV circuit breaker Reinforcement of £50,000 is at the Voltage Level of the POC and is subject to the Security CAF, however, the cost of the work is over the High-Cost Project Threshold of £45,000. To avoid any double charging, the Reinforcement cost at the Voltage Level of the POC is scaled down using the formula below.

The cost to be apportioned for the 11kV circuit breaker is therefore:

$$\text{Reinforcement cost} \times \frac{\text{High-Cost Project Threshold}}{\text{Total Reinforcement cost at the Voltage Level of the POC}}$$

$$£50,000 \times \frac{£45,000}{£50,000} = £45,000$$

Security CAF: (225/19,700) x 100 = 1.14%

£45,000 x 1.14% = £513 Customer Contribution

The Connection Charge for this Scheme is calculated as follows:

Reinforcement Over High-Cost Project Threshold:	**Cost**	**Apportionment / HCPT**	**Customer Contribution**
33/11kV Transformer Replacement	£475,400	£525,400 - £45,000 = £480,400	£480,400
11kV circuit breaker	£50,000		
Total Reinforcement Cost	£525,400		**£480,400**
Reinforcement Under High-Cost Project Threshold:	**Cost**	**Apportionment / HCPT**	**Customer Contribution**
11kV circuit breaker	£45,000 (£50,000 x (£45,000 / £50,000)	225 / 19,700 = 1.14%	£513
Total Reinforcement Cost (to be apportioned)	£45,000		**£513**

Extension Assets:	**Cost**	**Apportionment**	**Customer Contribution**
Electrical substation works	£34,500	n/a	£34,500
Install 590m of 11kV Overhead Line	£53,500	n/a	£53,500
Install 350m of 11kV XLPE cable	£14,000	n/a	£14,000

Total Extension Asset Cost	**£102,000**		**£102,000**

Total cost of the work = £525,400 + £102,000 = **£627,400**

Total Connection Charge to Customer = £480,400 + £513 + £102,000 = **£582,913**

Example 33: A new Generation Connection that has Reinforcement costs above the High-Cost Project Threshold at the Voltage Level of the POC (multiple assets to be cost apportioned).

Purpose: To show how a Generation Connection that triggers the Generation High-Cost Project Threshold at the Voltage Level of the POC is charged when the Reinforcement required is for multiple assets at the same Voltage Level of connection.

Like Example 13, a Customer requests a connection to a generator with a Required Capacity for export purposes of 3MW (6MW in Example 13). The Fault Level contribution at the primary substation from the generation connection is 10MVA.

The POC is to the existing 11kV network at point B and it is proposed to install 500m of 11kV underground cable from the POC to the Customer's installation. This is treated as Extension Assets.

The connection requires the Reinforcement of 500m of 11kV overhead line between points A and B for a thermal capacity requirement and the Security CAF applies. The connection also requires the replacement of the existing 11kV switchboard at the primary substation in order to increase its fault level rating from 150MVA to 350MVA and the Fault Level CAF applies. However, the new fault level will be limited by the fault level rating of the local network of 250MVA. The total cost of the Reinforcement is £820,000.

The High-Cost Project Threshold is exceeded for this connection. The HCPT is £200/kW (£600,000) and costs in excess of this threshold will be charged in full to the Customer (£220,000). The cost of Reinforcement all relates to the Voltage Level of the POC. The cost of Reinforcement to be apportioned at the Voltage Level of the POC is therefore scaled down by the amount over the High-Cost Project Threshold at that Voltage Level.

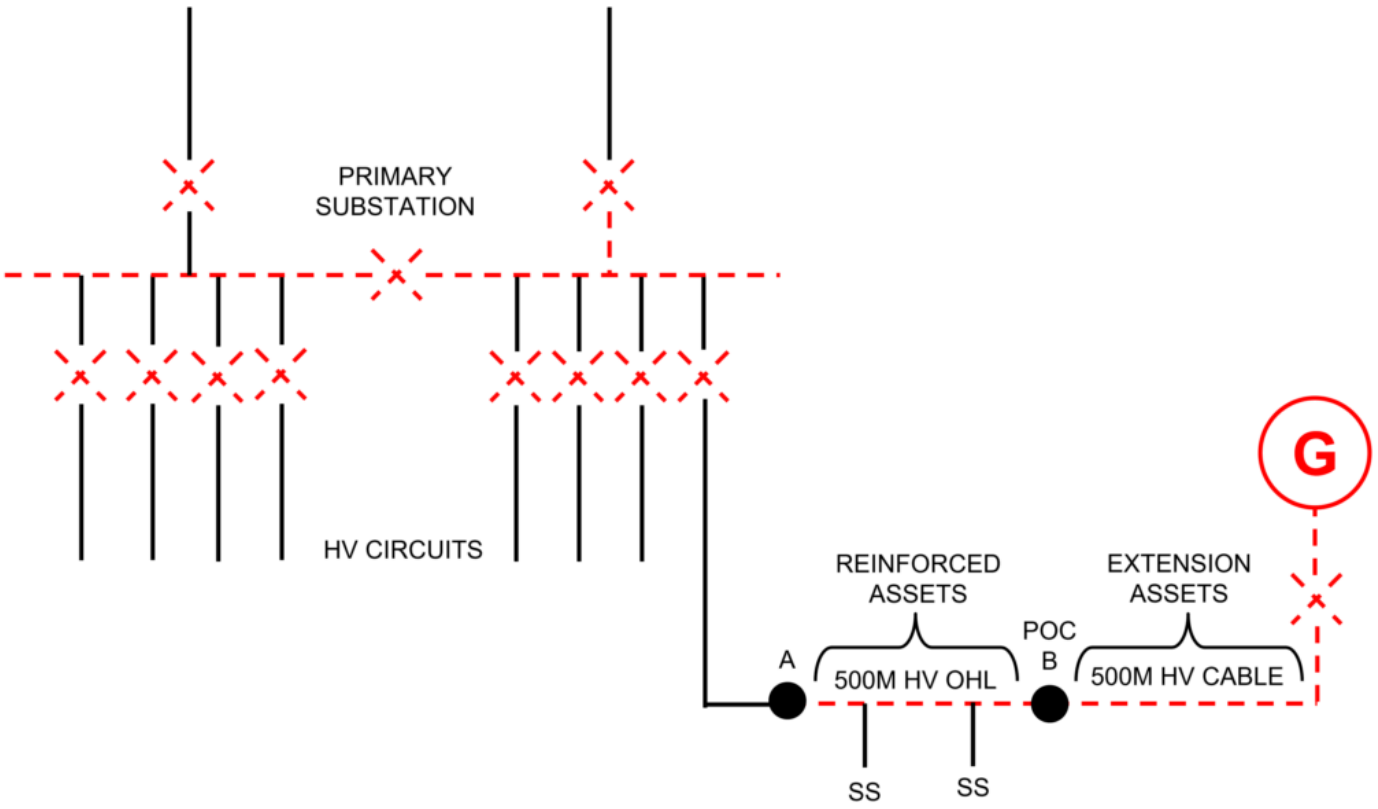

Reinforcement:

The Relevant Section of Network is the 11kV network from the primary substation to Point B.

Security CAF calculation: the numerator in the CAF calculation is based upon the Required Capacity of the Customer, i.e. 3MW. The denominator is based on the New Network Capacity following Reinforcement, which is 7.6MVA, i.e. after Reinforcement, in this particular case, the section of cable with the lowest rating.

The Relevant Section of Network is the 11kV switchboard at the primary substation.

Fault Level CAF calculation: The numerator in the CAF calculation is based upon the Fault Level contribution from the Customer's new generator connection, in this Example 10MVA. The denominator is based upon the New Fault Level Capacity, which is the lower of the Fault Level capacity of the new 11kV switchboard, 350MVA or of the local system, 250MVA in this Example.

The High-Cost Project Threshold for a Generation Connection is £200/kW.

The Reinforcement required to provide the connection (£820,000) is:

- Re-conductor of 500m of 11kV overhead line (£20,000); and
- Replacement 11kV switchboard (£800,000).

HCPT: £200 x 3,000 = £600,000

£820,000 - £600,000 = £220,000 Customer Contribution

The Reinforcement of £820,000 is at the Voltage Level of the POC and is subject to both the Security CAF and Fault Level CAF, however, the aggregate cost of the work is over the High-Cost Project Threshold of £600,000. To avoid any double charging, the Reinforcement costs at the Voltage Level of the POC are scaled down using the formula below.

The cost of Reinforcement to be apportioned for the re-conductor of 500m of 11kV overhead line is:

$$\text{Reinforcement cost} \times \frac{\text{High-Cost Project Threshold}}{\text{Total Reinforcement cost at the Voltage Level of the POC}}$$

$$£20,000 \times \frac{£600,000}{£820,000} = £14,634$$

Security CAF: (3,000/7,600) x 100 = 39.47%

£14,634 x 39.47% = £5,776 Customer Contribution

The cost of Reinforcement to be apportioned for the replacement 11kV switchboard is:

$$\text{Reinforcement cost} \times \frac{\text{High-Cost Project Threshold}}{\text{Total Reinforcement cost at the Voltage Level of the POC}}$$

$$£800,000 \times \frac{£600,000}{£820,000} = £585,366$$

Fault Level CAF: 3 x (10/250) x 100 = 12.00%

£585,366 x 12.00% = £70,244 Customer Contribution

The Connection Charge for this Scheme is calculated as follows:

Reinforcement Over High-Cost Project Threshold:	**Cost**	**Apportionment / HCPT**	**Customer Contribution**
Re-conductor of 500m of 11kV overhead line	£20,000	£820,000 - £600,000 = £220,000	£220,000
Replacement 11kV switchboard	£800,000		
Total Reinforcement Cost	£820,000		**£220,000**

Reinforcement	**Cost**	**Apportionment**	**Customer Contribution**
Re-conductor of 500m of 11kV overhead line	£14,634 (£20,000 x £600,000 / £820,000)	3 / 7.6 x 100% = 39.47% Security CAF	£5,776
Replacement 11kV switchboard	£585,366 (£800,000 x £600,000 / £820,000)	3 x (10 / 250) x 100% = 12.0% Fault Level CAF	£70,244
Total Reinforcement Cost (to be apportioned)	**£800,000**		**£76,020**

Extension Assets	**Cost**	**Apportionment**	**Customer Contribution**
Installation of 500m 11kV cable	£150,000	n/a	£150,000
11kV circuit breaker at Customer's substation	£12,000	n/a	£12,000
11kV pole top termination	£2,500	n/a	£2,500
Total Extension Asset Cost	**£164,500**		**£164,500**

Total cost of the work: = £820,000 + £164,500 **= £984,500**

Total Connection Charge to Customer = £220,000 + £76,020 + £164,500 **= £460,520**

Section 2 – Glossary of Terms

Act	the Electricity Act 1989 (as amended).
Adoption Agreement	is an agreement for us to adopt the Contestable Work, subject to the satisfaction of certain conditions. This agreement, amongst other things, addresses a number of fundamental principles: • The transfer of title from the asset owner (normally the Customer or the ICP) to us; • The quality and safety of the adopted asset; • Any required sureties; • The transfer of Land Rights; • The procedure for us to Energise the assets installed by the ICP during the works; • The payment of any residual Connection Charges or fees; • Planning permissions and compliance with street works legislation; and • Defect correction processes, where applicable. The parties to the Adoption Agreement may vary depending on the circumstances and may be between:- • us and you • us and your appointed ICP • us, you and your appointed ICP.
Bilateral Connection Agreement	an agreement between us and another LDNO setting out the terms and conditions under which an embedded network shall be entitled to be and remain connected to the Distribution System.
Business Day	any day other than a Saturday, a Sunday, Christmas Day, Good Friday or a day which is a bank holiday within the meaning of the Banking and Financial Dealings Act 1971 and will be from 9:00am to 5:00pm (GMT or BST as applicable).
CIC Charges	are the charges detailed in parts D, E, G, H, I, and J of Section [7] of this document.
Connection Agreement	the owner/ occupier of the Premises to which the connection is to be provided will be required to enter into a Connection Agreement with us. The Connection Agreement will set out the terms upon which they will be, and remain, connected to our Distribution System. The Connection Agreement will normally be provided on our behalf by the owner/occupier's chosen Supplier for the Premises as part of their application for a supply of electricity. However, in some cases for larger connections, or where nonstandard conditions exist, we will provide a site-specific Connection Agreement, which replaces any Connection Agreement put in place via the Supplier, as part of the connection process. This particular Connection Agreement will only take effect upon completion of the connection and will set out, in more detail, our rights and obligations to one another. Additionally, it may contain the technical detail of the installation being connected to the Distribution System and will require the owner/occupier of the Premises to comply with the provisions of the Distribution Code.
Connection Charge	the payment to be made by the applicant to us for the provision of the connection.
Curtailable Connection	means a connection whereby the Required Capacity can be restricted by the Company in accordance with DCUSA Schedule 2D.
CUSC	the Connection and Use of System Code which constitutes the contractual framework for connection to, and use of, the GB Transmission System.
Customer	the person requesting the connection.
DCUSA	the Distribution Connection and Use of System Agreement designated as such by the Authority under condition 22 of the Licence.
Dedicated Scheme	is defined in paragraph 1.40.
De-energise	to deliberately prevent the flow of electricity to or from an Exit/ Entry Point for any purpose other than a system outage on the our Distribution System (and cognate expressions shall be construed accordingly).
Demand Connection	a connection which is not a Generation Connection.
Development Phase	the five year period, unless otherwise agreed with us, commencing on the date of Energisation of an embedded network during which period the development is to be constructed.
Disconnect	means to permanently De-energise an Exit/ Entry Point by the removal of all or part of our equipment (and cognate expressions shall be construed accordingly.
Distributed Generation Connections Guide	the guide produced by us as required by our Licence which provides guidance on the connection process for distributed generation.
Distribution Code	covers, amongst other matters, all material technical aspects relating to: • connection to, and the operation and use of, the Distribution System; and • the operation of electrical lines and electrical plant or apparatus connected to the Distribution System. A copy of the Distribution Code can be downloaded from the Distribution Code website at www.dcode.org.uk.
Distribution System	the system (as defined in the Licence) consisting (wholly or mainly) of electric lines owned or operated by us and used for the distribution of electricity.

ECCR	the Electricity (Connection Charges) Regulations 2017 (SI 2017/106) as amended from time to time.
ECCR Prescribed Period	the relevant period from the date on which a connection is made as prescribed by the ECCR, being ten years, for connections made on or after 6 April 2017.
EHV	more than 22kV but not more than 72kV.
Electric Lines	means any line which is used for carrying electricity to or from an Exit/Entry Point and includes, unless the context otherwise requires: a. any support for such line, that is to say, any structure, pole or other thing in, on, by or from which any such line is or may be supported, carried or suspended; b. any apparatus connected to such line for the purpose of carrying electricity; and c. any wire, cable, tube, pipe or other similar thing (including its casing or coating) which surrounds or supports, or is surrounded or supported by, or is installed in close proximity to, or is supported, carried or suspended in association with, any such line.
Electric Plant	means any plant, equipment, apparatus or appliance used for or for purposes connected with the distribution of electricity (including any metering equipment) other than an Electric Line.
Electricity Storage	is the conversion of electrical energy into a form of energy which can be stored, the storing of that energy, and the subsequent reconversion of that energy back into electrical energy.
Electricity Generation	is the process of generating electricity.
Energise	to deliberately allow the flow of electricity to or from an Exit/Entry Point where such a flow of electricity has never previously existed (and cognate expressions shall be construed accordingly).
Enhanced Scheme	is defined in paragraph 1.4.
Entry/Exit Point	a point at which electricity, whether metered or unmetered, enter or exit our Distribution System.
ESO Licence	means a licence granted or treated as granted under section 6(1)(da) of the Act.
Existing Capacity	is defined in paragraph 1.29.
Extension Assets	are assets installed to connect a party or parties to the existing distribution network but which exclude Reinforcement assets.
Fault Level	the maximum prospective current or power that will flow into a short circuit at a point on the network, usually expressed in MVA or kA.
Fault Level Contribution from Connection	is defined in paragraph 1.29.
Flexible Connections	are connection arrangements whereby a Customer's export or import of electricity is managed (often through real-time control) based upon contracted and agreed principles of available capacity. Flexible Connections typically allow quicker and cheaper connection to the Distribution System but are made on the basis that there is no limit on the extent to which a user's access can be interrupted.
Full Planning Permission	an approval in writing by the relevant planning authority of all of the details of a proposed development such that the proposed development may proceed in accordance with that approval.
GB Transmission System	the system consisting (wholly or mainly) of high voltage electric wires owned or operated by transmission licensees and/or the ISOP as the holder of the ESO Licence within Great Britain.
Generation Connection	means a connection to a Premises where the primary purpose of the Premises is wholly or mainly Electricity Generation and/or Electricity Storage. In determining such primary purpose we will consider: i. if the Maximum Capacity of the connection of the Premises to the Distribution System for export is greater than the Maximum Capacity for import; ii. if the Premises has a Generation Licence; iii. if the Premises has a Generation Licence Exemption; and/or iv. any other information we consider relevant.
Generation Licence	means the owner or occupier of the Premises holds a licence to carry out the activity specified in section 4(1)(a) of the Act.
Generation Licence Exemption	means the owner or occupier of the Premises has an exemption from holding a Generation Licence, including under the Electricity (Class Exemptions from the Requirement for a Licence) Order 2001.
Guaranteed Standards of Performance	the standards of service set out in the Electricity (Standards of Performance) Regulations 2015 (as amended from time to time).
High-Cost Project Threshold	is defined in paragraph 1.16.
HV	more than 1kV but not more than 22kV
Independent Connections Provider (ICP)	a person with sufficient accreditation to carry out all or part of the Contestable Work.
Interruptions Incentive Scheme	the scheme which provides incentives on us to deliver a good level of performance in respect of customer interruptions and customer minutes lost.

ISOP	means the Independent System Operator and Planner as designated by the Secretary of State under section 162 of the Energy Act 2023 as the holder of the ESO Licence.
Land Rights	all such rights in, under or over Land as are necessary for the construction, installation, operation, repair, maintenance, renewal or use of the Contestable Work or Non-Contestable Work.
Licensed Distribution Network Operator (LDNO)	the holder of a Licence to distribute electricity.
LV	not more than 1kV.
Maximum Capacity	means in relation to any connection the maximum amount of electricity, as agreed with us and expressed in kW or kVA, that can be imported from or exported onto our Distribution System.
Meter Point Administration Number (MPAN)	is a 21 digit reference to uniquely identify Exit/Entry Point, such as individual domestic residences.
Minimum Scheme	is defined in paragraphs 1.1 to 1.7.
New Fault Level Capacity	is defined in paragraph 1.29.
New Network Capacity	is defined in paragraph 1.29.
Non-Curtailable Connection	means a connection which is not a Curtailable Connection.
Outline Planning Permission	a decision in writing by the relevant planning authority on the general principles of how a site can be developed, which is subject to subsequent approval of one or more reserved matters.
Point of Connection (POC)	is the point (or points) of physical connection to our existing Distribution System.
Premises	means any land, building or structure.
Reinforcement	is defined in paragraphs 1.17 to 1.27.
Relevant Section of Network	is defined in paragraph 1.29.
Rent-a-Jointer Services	the service relating to hiring of resource from us to facilitate the provision of unmetered connections.
Required Capacity	is defined in paragraph 1.29.
Scheme	our network design to provide the connection.
Speculative Developments	is defined in paragraph 1.48.
Supplier	a person who holds a Supply Licence.
Supply Licence	a licence granted under section 6(1)(d) of the Act.
Supply Number	a unique identifier of those Entry/ Exit Points on the Distribution System which are used for the purposes of either taking a supply of electricity or for the connection of a distributed generator, and which forms the basis of the metering point record on the Company's registration system.
Temporary Connections	is defined in paragraph 1.24.
Validity Period	the period for which a connection Offer or POC Offer is open for acceptance.
Voltage of Connection	is the voltage at the POC between the existing distribution network and the assets used to provide the connection. For clarity, this is not necessarily the voltage of supply to the Customer.
Voltage Level	is the voltage at the transforming point between two points on the Distribution System that is directly associated with the Customer's connection. The higher voltage is one Voltage Level above the Voltage Level of the POC.
Wide Area Scheme	is defined in paragraph 1.40.
Working Day	any day other than a Saturday, a Sunday, Christmas Day, Good Friday or a day which is a bank holiday within the meaning of the Banking and Financial Dealings Act 1971.

SCHEDULE 23: NOT USED

SCHEDULE 24: SERVICE LEVELS FOR RESOLVING NETWORK OPERATIONAL ISSUES AND ASSOCIATED REPORTING REQUIREMENTS

PART 1 - PRESCRIBED PERIODS

1. PRESCRIBED PERIODS

Clause	Prescribed Period
Category A	
30.5A.2	3 hours if the notification is received within Working Hours on a Working Day and within 4 hours if the report is within Working Hours on another day
30.5A.4(a)	10 Working Days after the notification
30.5A.4(b)	40 Working Days after the notification
Category B	
30.5B.2(a)	10 Working Days after receipt of the D0135 data flow
30.5B.2(b)	40 Working Days after receipt of the D0135 data flow

PART 2 - ASSET CONDITION CODES

2. ASSET CONDITION CODES

2.1 The codes to be used are those defined by reference to the Energy Market Data Specification Data Item J1824 “Asset Condition Code”

2.1.1 The asset condition codes for Category A Situations are referenced in the Energy Market Data Specification with the prefix “A”

2.1.2 The asset condition codes for Category B Situations are referenced in the Energy Market Data Specification with the prefix “B”

2.1.3 The asset condition codes for Category C Situations are referenced in the Energy Market Data Specification with the prefix “C”

PART 3 - COMPANY REPORTING REQUIREMENTS

3. COMPANY REPORTING REQUIREMENTS

3.1 The Company shall produce a report for the User in accordance with Clause 30.5F.1. The report shall be sent to the notice address notified to the Company for the purpose of this Paragraph 3.1 (or, in the event of no alternative contact being provided, the User’s Contract Manager).

3.2 The report will detail the following in respect of incidents notified to the Company during the Quarter being reported:

a. The number of Category A Situations:

i. for which the Service Level under Clause 30.5A.2 is met; and

ii. the number of Category A Situations reported.

b. The number of Category A Situations:

i. for which the Service Level under Clause 30.5A.4(a) is met; and

ii. the number of Category A Situations requiring a second visit.

c. The number of Category A Situations:

i. for which the Service Level under Clause 30.5A.4(c) is met; and

ii. the number of Category A Situations reported.

d. The number of Category B Situations:

i. for which the Service Level under Clause 30.5B.2(a) is met; and

ii. the number of Category B Situations reported.

e. The number of Category B Situations:

i. for which the Service Level under Clause 30.5B.2(c) is met; and

ii. the number of Category B Situations reported.

f. The number of situations:

i. reported as Category A where the category found is Category B or Category C

ii. reported as Category B where the category found is Category A or Category C.

g. The number of times in each Quarter that the Company has gone out to a perceived distribution fault at a Premises within three months of a smart meter being installed at the Premises and the fault is with the meter or the meter installation.

h. Additional information relevant to the report. This might include information on Force Majeure events and notification that the Company is released from its obligation, or deemed, to have met the Service Levels in accordance with Clause 30.5D.1 to 30.5D.7.

3.3 To provide this information the Company shall populate a table for the User in the form of the following:

Year and Quarter:					
Distributor Party:					
Category A Situations Attended [The descriptions in this column are for information. The full descriptions are set out in the relevant paragraphs of the DCUSA schedule.]					
(a)(i) The number of Category A Situations attended within 3 hours if the report is received within Working Hours on a Working Day and within 4 hours if the report is within Working Hours on another day.					
(a)(ii) The number of Category A Situations reported to the Distributor.					
Percentage of Category A situations attended in accordance with the Service Level, calculated as: (a)(i) as a percentage of (a)(ii)					
Category A Situation Appointments					
(b)(i) The number of Category A Situation Connectee agreed appointments (applies only where the situation cannot be resolved on the first visit) made within ten Working Days of notification of the situation or failed to be agreed having made reasonable endeavours to do so.					
(b)(ii) The number of Category A Situations where a subsequent additional site visit was required					
Percentage of Category A situation appointments made in accordance with the Service Level, calculated as: (b)(i) as a percentage of (b)(ii)					
Category A Situations					
(c)(i) The number of Category A Situations remedied within 40 Working Days of notification being received or where access was refused on attending site or where no appointment was agreed having made reasonable endeavours or where the agreed appointment was later than 40 Working Days					
(c)(ii) The number of Category A Situations reported.					

Percentage of Category A situations remedied within the Service Level, calculated as: (c)(i) as a percentage of (c)(ii)					
Category B Situation Appointments					
(d)(i) The number of Category B Situation Connectee agreed appointments made within ten Working Days of notification of the situation or failed to be agreed having made reasonable endeavours to do so.					
(d)(ii) The number of Category B Situations reported to the Distributor.					
Percentage of Category B situation appointments made in accordance with the Service Level, calculated as: (d)(i) as a percentage of (d)(ii)					
Category B Situations					
(e)(i) The number of Category B Situations remedied within 40 Working Days of notification being received or where access was refused on attending site or where no appointment was agreed having made reasonable endeavours or where the agreed appointment was later than 40 Working Days					
(e)(ii) The number of Category B Situations reported to the Distributor.					
Percentage of Category B situations remedied within the Service Level, calculated as: (e)(i) as a percentage of (e)(ii)					
Incorrect Categorisation					
(f)(i) The number of situations reported as Category A where the category found is Category B or Category C					
(f)(ii) The number of situations reported as Category B where the category found is Category A or Category C.					
Smart Meter Faults					
(g) The number of times in each Quarter that the Company has gone out to a perceived distribution fault at a Premises within three month of a smart meter being installed at the Premises and the fault is with the meter or the meter installation.					
Additional Information					
(h) Additional information relevant to the report. This might include information on Force Majeure events and notification that the Company is released from its obligation to have met the Service Levels in accordance with Clause 30.5D.1 to 30.5D.7.					

PART 4 - USER SMART METER INSTALLATION FORECAST REPORTING

4. USER SMART METER INSTALLATION FORECAST REPORTING

4.1 The report shall be produced and sent in accordance with Clause 30.5F.2, and shall provide the User's latest best estimate forecast of electricity smart meter installation by Distribution Services Area postcode area and outcode. The User shall produce one report for all Supplier Parties within a Group.

4.2 To provide this information the User shall populate the latest version of the rollout profile template as issued from time to time by the Secretary of State. The Meter Installation Forecast rollout profile template spreadsheet as published on the Website. The report shall be sent to the notice address notified to the User for such purposes (or, in the event of no alternative contact being provided, the Company's Contract Manager).

4.3 The User shall apply appropriate diligence to ensure that the Smart Meter Installation Forecast is produced in accordance with Good Industry Practice, and is consistent with other smart meter roll-out forecasts provided to the Secretary of State and/or the Authority.

SCHEDULE 25: DISTRIBUTOR METER MOVES DURING SERVICE ALTERATIONS

1. DISTRIBUTOR METER MOVES DURING SERVICE ALTERATIONS SCOPE DOCUMENT

1.1 The Panel shall establish the Distributor Meter Moves During Service Alterations Scope Document, and shall ensure that an up-to-date version of that document is published on the Website.

1.2 The Distributor Meter Moves During Service Alterations Scope Document may set out constraints which apply in respect of the rights of DNO/IDNO Parties to work on and relocate metering equipment, including specific meter types that can or cannot be moved by a DNO/IDNO Party during a service alteration.

1.3 The Panel shall oversee the process by which the Distributor Meter Moves During Service Alterations Scope Document is periodically reviewed and may be amended, including so as to add or remove meter types that can or cannot be moved.

1.4 DNO/IDNO Parties and Supplier Parties may, at any time, apply to the Panel requesting an amendment to the Distributor Meter Moves During Service Alterations Scope Document.

1.5 Where the Panel Secretary receives such an application, it shall ensure that the matter is added to the agenda for the next Panel meeting occurring more than 10 Working Days after receipt of such application, and shall give notice to all the Parties at least 10 Working Days before the Panel meeting in question:

1.5.1 setting out the identity of the Party that made the request;

1.5.2 specifying the date on which the Panel is due to consider the matter; and

1.5.3 inviting representations or objections with respect to the request before that date.

1.6 Where representations or objections are made in accordance with Paragraph 1.5, the Panel Secretary shall, as soon as reasonably practicable after receipt thereof and unless such representations or objections have been marked as confidential, provide such representations or objections alongside the request itself via publication with the relevant meeting documentation on the Website.

1.7 Following an application under Paragraph 1.4, the Panel shall resolve whether to accept the requested amendment to the Distributor Meter Moves During Service Alterations Scope Document. In passing such a resolution, the Panel may impose such conditions as it sees fit, including specifying whether a transition period is to apply and the term of any such transition period.

1.8 Where the Panel passes a resolution in accordance with Paragraph 1.7, it shall instruct the Secretariat to (a) publish the updated version on the Website; and (b) notify DNO/IDNO Parties and Supplier Parties that an updated version has been published, including a description of how the agreed version has been altered, details of any transition period or other applicable conditions, and a link to the location of the agreed version on the Website.

SCHEDULE 26: NOT USED

SCHEDULE 27: NOT USED

SCHEDULE 28: DISTRIBUTION CHARGING METHODOLOGIES DEVELOPMENT GROUP

1. SCOPE

1.1 The Distribution Charging Methodologies Development Group (or DCMDG) provides an opportunity for the Panel, a Party or any interested person to raise (and have discussed) issues relating to the Use of System Charging Methodologies. Where appropriate (to be determined in the terms of reference), the DCMDG will undertake a pre-assessment of proposed solutions prior to a formal Change Proposal being raised. The DCMDG will also act as a forum for any Party or interested person to discuss or present on an issue which relates to or impacts upon the Use of System Charging Methodologies.

1.2 The DCMDG will act under the auspices of the Panel but will have no powers to enforce changes to this Agreement or any existing industry agreements or associated systems.

2. OBJECTIVES

2.1 The objectives of the DCMDG shall be to:

a. meet periodically with any person whose interests are materially affected by one or more of the Use of System Charging Methodologies;

b. review issues relating to the Use of System Charging Methodologies that are submitted to it in by the Panel or by way of DCMDG Issue Forms;

c. discard issues as requiring no further action or to develop and propose cost / risk based solutions to issues;

d. identify the impact of such solutions on this Agreement;

e. consider such solutions in the light of the Charging Objectives;

f. carry out a pre-assessment of issues and provide the Panel with an early view as to the potential impact of Change Proposals that may be proposed from time to time;

g. review, on behalf of the Panel, industry developments and their possible impact on this Agreement;

h. consult outside the DCMDG where appropriate;

i. carry out any other activity requested by the Panel;

j. carry out discussion and assessment of any other matter relating to the Use of System Charging Methodologies which an attendee of a DCMDG meeting believes is appropriate;#

k. facilitate discussion relating to the implementation of the Use of System Charging Methodologies; and

l. allow full discussion on subjects which are of relevance and interest to those attending the DCMDG.

3. MEMBERSHIP

3.1 The membership of the DCMDG is not restricted to representatives of Parties and shall be open to any interested person who feels that they can contribute to the work of the DCMDG and the development of the Use of System Charging Methodologies.

3.2 The Panel can restrict membership of the DCMDG to a single individual from each organisation, corporate

group or Party (if the Panel so determines).

3.3 Subject to Paragraphs 3.1 and 3.2, the members of the DCMDG shall be appointed in accordance with Clauses 7.28 to 7.31.

4. CHAIR

4.1 The WG Chair for the DCMDG (the **Chair**) will at all times be an independent appointment and will be appointed by the Panel for a 12-month term.

4.2 Should the Chair resign, for whatever reason, before the expiry of their 12-month term, the Panel will appoint a new Chair.

4.3 The Chair's role will be to chair meetings, facilitate discussions and seek to establish a proposed way forward.

5. REQUIREMENTS OF MEMBERS

5.1 Members of the DCMDG will be expected, where reasonably possible, to ensure their attendance at DCMDG meetings on a consistent basis, and to ensure their commitment toward making the DCMDG a success.

5.2 Members of the DCMDG should be prepared to:

a. engage and participate in the DCMDG;

b. take actions to be completed outside of the DCMDG; and

c. report back on views and actions taken.

6. MEETING FREQUENCY

6.1 The DCMDG will schedule meetings on a monthly basis. The convening of any additional meetings of the group will be on an as required basis depending on the number of issues on the table and the urgency for the resolution of them.

6.2 The Chair may convene an emergency meeting of the DCMDG where necessary, for the purpose of debating urgent operational issues and, where appropriate, developing Change Proposals to overcome these.

6.3 The Chair will be required to give a minimum of 5 days' notice of any such emergency meeting. Where practical, and expedient, emergency meetings of the DCMDG may be conducted wholly, or partly, by conference call.

6.4 The Chair will be entitled to cancel any scheduled meeting of the DCMDG if, having consideration to the views of the group, they consider there are insufficient items of importance for debate at the meeting to warrant holding it.

7. SECRETARIAT

7.1 The DCMDG will be supported by the Secretariat, who shall be responsible for:

a. booking, convening and circulating notice of meetings;

b. logging DCMDG Issue Forms and validating them for completeness;

c. circulating the agenda for each meeting of the DCMDG at least 5 Working Days in advance of the meeting (or as far in advance as reasonably practicable in the case of emergency meetings);

d. writing minutes of the meeting in a style and level of detail specified by the Chair;

e. circulating minutes of the meeting no later than 10 Working Days following the meeting;

f. publishing all meeting papers and minutes on the Website; and

g. providing a report to the Panel from each meeting as appropriate, giving a summary of key issues and progress being made, and including the task list or work plan for the DCMDG.

8. SUMMARY OF PROCESS

8.1 The DCMDG will consider issues as:

a. directed by the Panel; or

b. raised by any person who submits a completed DCMDG Issues Form.

8.2 Where a DCMDG Issues Form has been submitted to the Secretariat, the Secretariat shall add the matter to the next scheduled DCMDG meeting. Issue forms submitted less than 5 Working Days before the next scheduled meeting will be accepted at the discretion of the Chair.

8.3 The DCMDG shall consider and recommend to the Panel or raising person (as appropriate) solutions to issues within the DCMDG's scope.

8.4 The DCMDG will actively seek to cluster issues for consideration together where a single solution may be viable.

8.5 The DCMDG may recommend that changes be proposed to this Agreement for the resolution of these issues.

8.6 Where the DCMDG has discussed an issue and considers that a Change Proposal is needed, the Secretariat can be asked to raise a Change Proposal using the process set out in Clause 10.2A.

9. DECISION MAKING

9.1 Recommended solutions to issues may be agreed at the meeting. The recommendations may include, but are not limited to, changes to this Agreement and best practice guidance to Parties.

9.2 Recommendations are to be agreed by majority consensus of those attending the relevant DCMDG meeting.

10. REPORTING

10.1 The DCMDG reports directly to the Panel. A report will be provided to the Panel from each meeting, as appropriate, giving a summary of key issues and progress being made and including the task list or work plan for the group.

11. FUNDING

11.1 The Panel will be responsible for the costs of Secretariat services and ancillary charges such as meeting and teleconferencing charges.

11.2 The expenses of members of and attendees at the DCMDG shall be the responsibility of each such member or attendee.

12. OTHER MATTERS

12.1 Save as set out in this Schedule, the procedures of the DCMDG shall be in accordance with any direction by the Panel from time to time.

SCHEDULE 29: CALCULATION OF DISCOUNT PERCENTAGES FOR THE PURPOSE OF DETERMINING CERTAIN LDNO USE OF SYSTEM CHARGES UNDER SCHEDULES 16, 17 AND 18

IMPLEMENTATION DATE

This Schedule 29, version 16.1, is to be used for the calculation of Use of System Charges which will become effective from, 01 April 2024 and remain effective until superseded by a later revised version.

1 This Schedule forms part of the CDCM and the EDCMs. It describes the methodology for the calculation of discount percentages for the purpose of determining certain LDNO use of system charges under Schedules 16, 17 and 18.

1A. In order to comply with this methodology statement when setting distribution Use of System Charges the DNO Parties will populate the price control disaggregation model (PCDM) version 5.0 when issued by the Panel in accordance with Clause 14.5.3.

2 For the purposes of calculating discount percentages, the DNO Party's network is split into five levels: (i) LV services, (ii) LV mains, (iii) HV/LV, (iv) HV and (v) a single level covering EHV and 132kV (including EHV/HV).

3 The calculation of discount percentages used in Schedule 16 involves the following steps:

a. Breakdown of price control allowed revenue between operating expenditure, depreciation and return on regulatory asset value.
b. Allocation of each of these components of price control allowed revenue to network levels.
c. Determination of a percentage allocation of total revenue per unit to network levels.
d. Determination of the proportion of the LV mains deemed to be used by LV-connected embedded networks.
e. Determination of the proportion of the HV network deemed to be provided by HV-connected embedded networks.
f. Calculation of the discount percentage for each combination of boundary network level and end user network level.

4 For the calculation of discount percentages used in Schedule 16, in order to determine the allocation to network levels of each element of price control revenue, the DNO Party uses cost allocation drivers calculated from the following sources:

a. Regulatory Reporting Pack (RRP) data on units distributed and operating expenditure broken down by network level.
b. Data that each DNO Party considers appropriately represents the forecast of net capital expenditure and customer contributions for the period 2005/2006-2014/2015, broken down by network level.
c. Data from a version of the Forecast Business Plan Questionnaires (FBPQ) that would have been submitted by each DNO Party to the Authority before April 2010.
d. Forecast data that each DNO Party considers appropriately represents the gross modern equivalent asset values (replacement costs) for various asset types.
e. The value of all notional assets calculated in each DNO Party's EDCM model. This comprises the aggregate of:

i. the sum of notional site-specific asset values of all network levels allocated to capacity for all customers in the DNO Party's EDCM model;
ii. the sum of notional asset values at all network levels allocated to demand for all customers in the DNO Party's EDCM model;
iii. the sum of sole use asset values allocated to demand for all customers in the DNO Party's EDCM model; and

iv. the sum of sole use asset values for generation only for all customers in the DNO Party's EDCM model.

f. The CDCM notional asset values for each network level as referred to in paragraph 63 of Schedule 16.

g. The 'Pass-through Smart Meter Communication Licence Costs' from the CDCM target revenue as reflected in Table 1 of Schedule 20, expressed in 2007/08 prices (see paragraphs 11B and 11C below).

5 The calculation of discount percentages used in Schedules 17 and 18 is a two-part process. The first part of the process involves the calculation of the percentages used to allocate the DNO Party's Allowed Revenue to each network level. This is done for each element of Allowed Revenue: the operating cost, depreciation and return on RAV elements. These are aggregated over the period 2005/2006 to 2009/2010 (the DPCR4 period). In order to determine the allocation to network levels of each element of price control revenue, the following cost allocation drivers are used:

a. Data submitted by the DNO Party to the Authority using the format prescribed in the Regulatory Reporting Pack (RRP) on units distributed and operating expenditure broken down by network level (relating to the year 2007/2008).

b. Data from a version of the FBPQ that would have been submitted by each DNO Party to the Authority before April 2010.

c. Data that each DNO Party considers appropriately represents the forecast of net capital expenditure and customer contributions for the period 2005/2006-2014/2015, broken down by network level.

d. Forecast data that each DNO Party considers appropriately represents the gross modern equivalent asset values (replacement costs) for various asset types.

e. The 'Pass-through Smart Meter Communication Licence Costs' from the CDCM target revenue as reflected in Table 1 of Schedule 20, expressed in 2007/08 prices (see paragraphs 11B and 11C below).

ALLOCATION OF OPERATING EXPENDITURE TO NETWORK LEVELS

6 The DNO Party allocates operating expenditure in the 2007/2008 RRP by network level. The RRP already allocates some operating expenditure by network level.

6A The DNO Party allocates the 'Pass-through Smart Meter Communication Licence Costs' from the CDCM target revenue as described in Table 1 of Schedule 20 by network level (see paragraphs 11B and 11C below).

Table: Allocation rules

	Allocation key	Percentage capitalised	Direct cost indicator
Load related new connections & reinforcement (net of contributions)	As described in this Schedule	100.0%	1
Non-load new & replacement assets (net of contributions)	MEAV	100.0%	1
Non-operational capex	MEAV	23.5%	1
Faults	MEAV	23.5%	1
Inspections, & Maintenance	MEAV	23.5%	1
Tree Cutting	MEAV	23.5%	1
Network Policy	MEAV	52.57%	
Network Design & Engineering	MEAV	52.57%	
Project Management	MEAV	52.57%	
Engineering Mgt & Clerical Support	MEAV	52.57%	
Control Centre	MEAV	52.57%	
System Mapping - Cartographical	MEAV	52.57%	
Customer Call Centre	MEAV	52.57%	

Stores	MEAV	52.57%	
Vehicles & Transport	MEAV	52.57%	
IT & Telecoms	Do not allocate	52.57%	
Property Mgt	Do not allocate	52.57%	
HR & Non-operational Training	MEAV	52.57%	
Health & Safety & Operational Training	MEAV	52.57%	
Finance & Regulation	MEAV	52.57%	
CEO etc	MEAV	52.57%	
Atypical cash costs	Do not allocate		1
Pension deficit payments	Do not allocate	57.7%	1
Metering	Do not allocate		1
Excluded services & de minimis	Do not allocate		1
Relevant distributed generation (less contributions)	Do not allocate		1
IFI	Do not allocate		1
Disallowed Related Party Margins	Do not allocate		1
Statutory Depreciation	Do not allocate		1
Network Rates	Do not allocate		1
Transmission Exit Charges	Deduct from revenue		1
Pension deficit repair payments by related parties	Do not allocate		1
Non activity costs and reconciling amounts	See paragraph 11A below		See paragraph 11A below
Pass-through Smart Meter Communication Licence Costs	See paragraph 11B below		See paragraph 11B below

7 For the categories of expenditure for which the table reports “MEAV” under “the column “Allocation key”, the DNO Party allocates the difference between total and allocated operating expenditure on the basis of an estimate of modern equivalent asset value by network level. Estimated gross modern equivalent asset values used for this purpose are derived from asset counts and gross modern equivalent asset values (replacement costs) for various asset types. The DNO Party maps assets to network levels using the mapping shown in the table in paragraph 12 (Mapping of assets to network levels), and calculates the share of MEAV allocated to each of the network levels.

8 For the calculation of discount percentages used in Schedule 16 only, the estimated gross modern equivalent asset value at the EHV and 132kV network level is adjusted by multiplying it by the EHV Reduction Ratio. The EHV Reduction Ratio is a factor applied to the EHV network drivers that reduces the allocation of costs to the EHV network level to account for revenues recovered from EDCM Connectees. The **“EHV Reduction Ratio”** is calculated as follows:

[EHV Reduction Rate] = [EHV and 132kV assets in the CDCM model] / ([EHV and 132kV assets in the CDCM model] + [All notional assets in the EDCM model])

Where:

EHV and 132kV assets in the CDCM model = the sum of the notional values in £ of the EHV assets in the CDCM model, namely 132kV, 132kV/EHV, EHV, EHV/HV, and 132kV/HV assets; and

All notional assets in the EDCM model = the total notional value in £ of the assets as described in paragraph 4(e) above.

9 For each network level, the DNO Party calculates a category of operating costs called "*Load related new connections & reinforcement (net of contributions)"* as the sum of the following elements:

a. General reinforcement costs reported in table 2.4 of the 2007/2008 RRP. These are reported by network level. The amount related to the HV system is allocated entirely to the HV network level. No allocation is made for the HV/LV network level.
b. ["New connections & customer specific reinforcement" less "Customer contributions (directs) for connections" for connections at each network level aggregated over the period 2005/2006 to 2014/2015], and divided by 10. Both sets of numbers are reported for each network level in the FBPQ (worksheet LR1). No allocation is made for the HV/LV network level. If this element is negative for any network level, it is replaced by zero for that network level.

10 The DNO Party adjusts the operating costs allocated to each network level - equal to the sum of the operating costs already allocated to network levels in the 2007/2008 RRP and the operating costs allocated in line with the previous paragraphs - by multiplying, for each operating cost category, the allocated cost by [one minus the relevant capitalisation percentage specified in the table in paragraph 6 (Allocation rules)].

11 On the basis of summing this adjusted allocation of operating costs across cost categories for each network level, the DNO Party calculates the share of operating costs of each network level. These are denoted as **"Expensed proportions".**

11A. RRP costs described in the table at paragraph 6 above as "Non activity costs and reconciling amounts" shall be allocated as follows:

a. costs described in table 2.6 of the 2007/2008 RRP as "Ofgem licence fee" shall be 100% allocated directly to the LV services level and treated as indirect costs; and
b. no other costs shall be directly allocated.

11B. Costs included in the CDCM target revenue as described in Table 1 of Schedule 20 reflected as 'Pass-through Smart Meter Communication Licence Costs' shall be expressed in 2007/08 prices and shall be added to the final allocation of operating expenditure and be 100% allocated directly to the LV Services level and treated as indirect costs.

11C. Conversion to 2007/08 prices shall be undertaken using the price index adjustment factor applying under the charge restriction conditions of the DNO Party's Distribution Licence, by multiplying the input from the CDCM by the following price index adjuster:

$$\text{Price Index Adjuster} = \frac{\text{PI}_{2007/08}}{\text{PI}_{t}}$$

Where $PI_{2007/08}$ is the price index in 2007/08 and PI_t is the price index for the charging year for which charges are being calculated under this Schedule 29.

12 Transmission exit charges are not allocated to any of the voltage tiers. These charges are deducted from the allowed revenue.

Table: Mapping of assets to network levels

Asset	Network level
LV mains overhead lines	LV mains

LV services overhead lines	LV services
LV overhead support	LV mains
LV mains underground cable, consac	LV mains
LV mains underground cable, plastic	LV mains
LV mains underground cable, paper	LV mains
LV services underground cable	LV services
LV pillar, indoors	LV mains
LV pillar, outdoors	LV mains
LV board, wall-mounted	LV mains
LV board, underground	LV mains
LV fuses, pole-mounted	LV mains
LV fuses, tower-mounted	LV mains
6.6/11 kV overhead line, open	HV
6.6/11 kV overhead line, covered	HV
20 kV overhead line, open	HV
20 kV overhead line, covered	HV
6.6/11 kV overhead support	HV
20 kV overhead support	HV
6.6/11kV underground cable	HV
20kV underground cable	HV
HV submarine cable	HV
6.6/11 kV circuit breaker pole-mounted	HV
6.6/11 kV circuit breaker ground-mounted	HV
6.6/11 kV switch pole-mounted	HV
6.6/11 kV switch ground-mounted	HV/LV
6.6/11 kV ring main unit	HV/LV
6.6/11 kV other switchgear, pole-mounted	HV
6.6/11 kV other switchgear, ground-mounted	HV
20 kV circuit breaker, pole-mounted	HV
20 kV circuit breaker, ground-mounted	HV
20 kV switch, pole-mounted	HV
20 kV switch, ground-mounted	HV/LV
20 kV ring main unit	HV/LV
20 kV other switchgear, pole-mounted	HV
20 kV other switchgear, ground-mounted	HV
6.6/11 kV transformer, pole-mounted	HV/LV
6.6/11 kV transformer, ground-mounted	HV/LV
20 kV transformer, pole-mounted	HV/LV
20 kV transformer, ground-mounted	HV/LV
33kV overhead pole line	EHV and 132kV
33kV overhead tower line	EHV and 132kV
66kV overhead pole line	EHV and 132kV
66kV overhead tower line	EHV and 132kV
33kV pole	EHV and 132kV
33kV tower	EHV and 132kV
66kV pole	EHV and 132kV
66kV tower	EHV and 132kV
33kV underground cable, non-pressurised	EHV and 132kV

33kV underground cable, oil	EHV and 132kV
33kV underground cable, gas	EHV and 132kV
66kV underground cable, non-pressurised	EHV and 132kV
66kV underground cable, oil	EHV and 132kV
66kV underground cable, gas	EHV and 132kV
EHV submarine cable	EHV and 132kV
33 kV circuit breaker, indoors	EHV and 132kV
33 kV circuit breaker, outdoors	EHV and 132kV
33 kV switch, ground-mounted	EHV and 132kV
33 kV switch, pole-mounted	EHV and 132kV
33 kV ring main unit	EHV and 132kV
33 kV other switchgear	EHV and 132kV
66 kV circuit breaker, indoors and outdoors	EHV and 132kV
66 kV other switchgear	EHV and 132kV
33 kV transformer, pole-mounted	EHV and 132kV
33 kV transformer, ground mounted	EHV and 132kV
33 kV auxiliary transformer	EHV and 132kV
66 kV transformer	EHV and 132kV
66 kV auxiliary transformer	EHV and 132kV
132kV overhead line pole conductor	EHV and 132kV
132kV overhead line tower conductor	EHV and 132kV
132kV pole	EHV and 132kV
132kV tower	EHV and 132kV
132kV tower fittings	EHV and 132kV
132kV underground cable, non-pressurised	EHV and 132kV
132kV underground cable, oil	EHV and 132kV
132kV underground cable, gas	EHV and 132kV
132kV submarine cable	EHV and 132kV
132kV circuit breaker, indoors and outdoors	EHV and 132kV
132kV other switchgear	EHV and 132kV
132kV transformer	EHV and 132kV
132kV auxiliary transformer	EHV and 132kV
132kV/EHV remote terminal unit, pole-mounted	EHV and 132kV
132kV/EHV remote terminal unit, ground-mounted	EHV and 132kV
HV remote terminal unit, pole-mounted	HV
HV remote terminal unit, ground-mounted	HV

ALLOCATION OF DEPRECIATION AND RETURN TO NETWORK LEVELS

13 Both the depreciation and return on capital elements of allowed revenue are allocated to network levels on the basis of net capital expenditure data aggregated over the 10-year period from 2005/2006 to 2014/2015, taking in the DNO Party's appropriate estimates or forecasts for each year as available.

14 The DNO Party calculates the net capital expenditure split by LV, LV/HV, HV, and EHV and 132kV (which includes EHV/HV). For each of these four segments, the relevant net capital expenditure is calculated by adding up expenditure on total condition based replacement (proactive and reactive replacement), connections spend minus customer contributions (directs) for connections at that voltage level, general

reinforcement capital expenditure at that voltage level, and fault reinforcement capital expenditure at that voltage level.

15 For the calculation of discount percentages used in Schedule 16 only, the net capital expenditure at the EHV and 132kV network level is adjusted by multiplying it by the EHV Reduction Ratio (see paragraph 8 above). This adjustment is not done for the calculation of discount percentages used in Schedules 17 and 18.

16 Some of these net capital expenditure categories allow HV substation and transformer costs to be identified. These costs (and no other costs) are allocated to the HV/LV network level. The ratio of the expenditure in these categories on HV substations and transformers to the expenditure in these categories on other HV assets is denoted as **"HV/LV capital expenditure ratio".**

17 Some of the net capital expenditure categories do not separately identify HV substation/transformer costs and report a single figure for HV. For these categories, the costs reported under HV are split between the HV/LV network and the HV network level so that the ratio of the amount allocated to the HV/LV network level to the costs reported under HV is equal to the [HV/LV capital expenditure ratio] determined above.

18 Generation-related capital expenditure is not included in the net capex attributable to each network level.

19 The DNO Party splits the net capital expenditure allocated to LV by dividing it between the LV mains and the LV services network levels. It does this on the basis of the ratio of net capital expenditure on total condition based replacement costs for each of those two network levels.

DETERMINATION OF A PERCENTAGE ALLOCATION OF TOTAL REVENUE PER UNIT TO NETWORK LEVELS

20 The DNO Party determines a breakdown of price control allowed revenue over the period from 2005/2006 to 2009/2010 between (1) operating expenditure, (2) depreciation and (3) return on regulatory asset value. Operating expenditure is then allocated to each network level according to the [Expensed proportions] for each network level (see paragraph 11 above). The depreciation and return on regulatory asset value elements of price control allowed revenue are allocated to each network level in the proportions calculated as described in paragraphs 13-19 of this Schedule. Different allocations are obtained for the purpose of Schedule 16 and for the purposes of Schedules 17 and 18. Again, separately for the purposes of Schedule 16 and for Schedules 17 and 18, the allocations of each of the three components of price control allowed revenue are aggregated by network level to obtain a percentage per network level of total price control allowed revenue.

21 The price control allowed revenue for 2007/2008 (denoted as the **"Total allowed revenue"**) is adjusted by deducting from it the [Revenue not to share] (denoted as the **"Adjusted total revenue to share"**). The **"Revenue not to share"** comprises the aggregate of:

a. the net amount earned by the DNO Party under price control financial incentive schemes for 2007/2008 (this may be a negative number); and
b. Transmission exit charges for 2007/2008.

22 The [Adjusted total revenue to share] for the calculation of discount percentages used in Schedule 16 (and the [Total revenue to share] for the calculation of discount percentages used in Schedule 17 and 18) are then allocated to each network level using the appropriate weighted average percentage allocations calculated as described in paragraph 20 of this Schedule.

23 A further two revenue elements are allocated to each network level using the [Expensed proportions] for each network level:

a. “Customer contributions indirects” (from worksheet LR1 of the FBPQ) aggregated over the period 2005/2006 to 2014/2015, and divided by ten.
b. The absolute value of the aggregate across all network levels and over the period 2005/2006 to 2014/2015 of any negative numbers obtained when “New connections & customer specific reinforcement” less “Customer contributions (directs) for connections” for connections at each network level in the FBPQ (worksheet LR1) is calculated, divided by 10.

24 The revenues allocated to each network level are then rescaled by the estimated number of units flowing through each network level, loss adjusted to LV. The result is denoted by **“Revenue to share per unit”,** for each network level. The Revenue not to share is re-scaled by all units flowing into the DNO Party's EHV network, loss adjusted to LV; the result is denoted as **“Revenue not to share per unit”**.

25 The DNO Party calculates the number of units flowing through each network level, loss-adjusted to LV, in two steps.

26 The first step is to calculate adjustment factors for units distributed at LV, at HV and at EHV and 132kV in respect of each of the LV, HV and EHV and 132kV levels.

a. For units distributed at LV, the adjustment factor is 1 (one).
b. For units distributed at HV, the adjustment factor is 0 (zero) in respect of the LV level, and (U + 0.5*Losses) / (U + Losses) in respect of the other levels, where U is the number of units distributed at LV plus half of the number of units distributed at HV plus a quarter of the number of units distributed at EHV and 132kV.
c. For units distributed at EHV, the adjustment factor is 0 (zero) in respect of the LV and HV levels, and (U + 0.25*Losses) / (U + Losses) in respect of the EHV and 132kV level, where U is defined as above.

27 The second step is to calculate, for each of the LV, HV, and EHV and 132kV networks, the sum of the product of the three adjustment factors and the units distributed at each of LV, HV, and EHV and 132kV. This gives the number of units, (loss adjusted to LV) flowing through each of the LV, HV, and EHV and 132kV networks. The number of units (loss adjusted to LV) flowing through the LV services, the LV mains and the HV/LV network levels are the same as the number flowing through the LV network.

28 For each network level, the DNO Party calculates the percentage that the [Revenue to share per unit] represents of the sum of the [Revenue to share per unit] across all network levels and the [Revenue not to share per unit]. The results are denoted as **“LV mains allocations”, “LV services allocation”, “HV/LV allocation”, “HV allocation”** and **“EHV and 132kV allocation”.**

CALCULATION OF DIRECT PROPORTIONS

29 The DNO Party calculates the [HV direct proportion] and the [LV direct proportion] on the basis of the allocation of RRP operating expenditure and 'Pass-through Smart Meter Communication Licence Costs' across network levels set out in paragraphs 6 and 7 of this Schedule (before the adjustment for capitalisation rates is made). Before this calculation is performed, any negative figure is set to zero.

30 The **“HV direct proportion”** is the ratio of the sum of the operating expenditure allocated to the HV network level across the expenditure categories identified as “Direct costs” in the table in paragraph 6 (Allocation rules) to the sum of the operating expenditure allocated to the HV network level across all operating expenditure categories.

31 The **“LV direct proportion”** is the ratio of the sum of the operating expenditure allocated to the LV services or the LV mains network levels across the expenditure categories identified as “Direct costs” in the table in

paragraph 6 (Allocation rules) to the sum of the operating expenditure allocated to the LV services or LV mains networks level across all operating expenditure categories.

32 The DNO Party calculates the [EHV and 132kV direct cost proportion] on the basis of the allocation of RRP operating expenditure across network levels set out in paragraphs 6-12 of this Schedule (before the adjustment for capitalization rates is made). Before this calculation is performed, any negative figure is set to zero. The **"EHV and 132kV direct cost proportion"** is calculated as the ratio of the sum of the operating expenditure allocated to the EHV and 132kV network level across the expenditure categories identified as "Direct costs" in the table in paragraph 6 (Allocation rules) to the sum of the operating expenditure allocated to the EHV and 132kV network level across all operating expenditure categories.

LV MAINS SPLIT

33 The DNO Party will procure that the Nominated Calculation Agent estimates for the DNO Party's Distribution Services Area the proportion of the LV mains which LV-connected embedded networks are deemed to use by:

a. determining the total length of its LV mains used by LV-connected embedded networks;
b. dividing that total length by the number of end users on LV-connected embedded networks; and
c. dividing the result by the average length of LV mains by LV end user on the DNO Party's own LV network.

34 The estimates will be based on available data provided by DNO Parties and IDNO Parties.

35 The result of this calculation is denoted "**LV mains split**".

HV SPLIT

36 The DNO Parties will procure that the Nominated Calculation Agent estimates the typical proportion of the HV network which is provided by the DNO Party in the case of HV loads supplied through an HV-connected embedded network. This estimate will be based on sample data, and the average used will be the same for all DNO Parties.

37 The proportion is denoted "**HV split**", and is represented as:

$$HV\,Split = 1 - \frac{Sum\ of\ LDNO\ network\ length\ /\ Number\ of\ LDNO\ connections}{Sum\ of\ DNO\ network\ lengths\ /\ Number\ of\ LDNO\ connections}$$

EHV NETWORK LEVEL DISAGGREGATION

38 For the calculation of discount percentages used in Schedule 17 and 18 only, the percentage allocated to the EHV and 132kV network level, [EHV and 132kV allocation], is split into separate percentages for the following asset levels:

a. 132kV circuits (England and Wales only);
b. 132kV/EHV substations (England and Wales only);
c. EHV circuits; and
d. EHV/HV substations

39 The DNO Party splits [EHV and 132kV allocation] into separate percentages for the above assets levels on the basis of the share of the MEAV of the EHV and 132kV network level accounted for by the MEAV of the

assets associated with each of the four asset levels. The DNO Party does this on the basis of the MEAV of the assets and of the mapping in the table below. The results of the allocation of [EHV and 132kV allocation] into percentage allocations for the different EHV and 132kV asset levels are denoted as **"132kV allocation", "132kV/EHV allocation", "EHV allocation"** and **"EHV/HV allocation".**

Table: MEAV EDCM mapping

Asset	Asset level
6.6/11 kV circuit breaker pole-mounted	EHV/HV
6.6/11 kV circuit breaker ground-mounted	EHV/HV
20 kV circuit breaker, pole-mounted	EHV/HV
20 kV circuit breaker, ground-mounted	EHV/HV
33kV overhead pole line	EHV
33kV overhead tower line	EHV
66kV overhead pole line	EHV
66kV overhead tower line	EHV
33kV pole	EHV
33kV tower	EHV
66kV pole	EHV
66kV tower	EHV
33kV underground cable, non-pressurised	EHV
33kV underground cable, oil	EHV
33kV underground cable, gas	EHV
66kV underground cable, non-pressurised	EHV
66kV underground cable, oil	EHV
66kV underground cable, gas	EHV
EHV submarine cable	EHV
33 kV circuit breaker, indoors	132kV/EHV
33 kV circuit breaker, outdoors	132kV/EHV
33 kV switch, ground-mounted	132kV/EHV
33 kV switch, pole-mounted	132kV/EHV
33 kV ring-main-unit	132kV/EHV
33 kV other switchgear	EHV/HV
66 kV circuit breaker, indoors and outdoors	132kV/EHV
66 kV other switchgear	EHV/HV
33 kV transformer, pole-mounted	EHV/HV
33 kV transformer, ground mounted	EHV/HV
33 kV auxiliary transformer	EHV/HV
66 kV transformer	EHV/HV
66 kV auxiliary transformer	EHV/HV
132kV overhead line pole conductor	132kV
132kV overhead line tower conductor	132kV
132kV pole	132kV
132kV tower	132kV
132kV tower fittings	132kV
132kV underground cable, non-pressurised	132kV
132kV underground cable, oil	132kV
132kV underground cable, gas	132kV
132kV submarine cable	132kV

132kV circuit breaker, indoors and outdoors	132kV
132kV other switchgear	132kV
132kV transformer	132kV/EHV
132kV auxiliary transformer	132kV/EHV
132kV/EHV remote terminal unit, pole mounted	EHV/HV
132kV/EHV remote terminal unit, ground mounted	EHV/HV

CALCULATION OF DISCOUNT PERCENTAGES

40 The discount percentage used in Schedule 16 to calculate tariffs applicable to embedded networks with an LV boundary is:

[LV: LV discount] = [LV services allocation] + ([LV mains allocation](1 - [LV mains split]*[LV direct proportion])).*

41 For embedded networks with an HV boundary, three percentage discount figures are used in Schedule 16.

42 The discount percentage used in Schedule 16 to calculate tariffs applicable to embedded networks with an HV boundary in respect of LV network end users is:

[HV: LV discount] = [LV services allocation] + [LV mains allocation] + [HV/LV allocation] + [HV allocation](1 - [HV split]*[HV direct proportion]).*

43 The discount percentage used in Schedule 16 to calculate tariffs applicable to embedded networks with an HV boundary in respect of LV substation end users is:

[HV: LV Sub discount] = ([HV/LV allocation] + [HV allocation](1 - [HV split]*[HV direct proportion]))/(1 - [LV mains allocation] - [LV services allocation]).*

44 The discount percentage used in Schedule 16 to calculate tariffs applicable to embedded networks with an HV boundary in respect of HV end users is:

[HV: HV discount] = [HV allocation](1 - [HV split]*[HV direct proportion])/ (1 - [LV services allocation] - [LV mains allocation] - [HV/LV allocation]).*

45 For the calculation of discount percentages used in Schedules 17 and 18, each LDNO Distribution System is allocated to one of five discount categories, defined as follows:

a. Discount category 0000 - this applies where the asset ownership boundary between the host DNO Party and the LDNO is at the GSP.
b. Discount category 132kV (in England and Wales only) - this applies where the asset ownership boundary is at 132kV and not at the GSP.
c. Discount category 132kV/EHV (in England and Wales only) - this applies where the asset ownership boundary is at 22kV or more on the secondary side of a substation where the primary side is at 132kV.
d. Discount category EHV - this applies where the asset ownership boundary is at 22kV or more, but less than 132kV, not at a GSP or at a transformation substation where the primary is at 132kV.
e. Discount category HVplus - this applies where the asset ownership boundary is at less than 22kV.

45A. For the purposes of allocating each LDNO Distribution System to a category in accordance with paragraph 45, the DNO Party may designate 66 kV circuits belonging to either network level l or 3 and substations with a primary voltage of 66 kV into level 2 or level 4 or level 5, depending on its network planning policies.

46 Discount percentages for Schedules 17 and 18 are determined as follows:

For discount categories 0000, 132kV/EHV and HVplus

Discount percentage = the lowest of 100 per cent and P / (S + U)

For discount category 132kV

Discount percentage = the lowest of 100 per cent and (P + ([132kV allocation] * (1 - ([Network length split for 132kV] * [EHV and 132kV direct cost proportion])))) / (S +U)

For discount category EHV

Discount percentage = the lowest of 100 per cent and (P + ([EHV allocation] * (1 - ([Network length split for EHV] * [EHV and 132kV direct cost proportion])))) / (S +U)

Where:

Discount percentage is the discount applicable for each combination of discount category and end user type.

P is the sum of the allocation percentages for all network levels below the network level of the DNO Party-embedded network boundary up to and including the network level of the end user in the case of demand, and up to and excluding the network level of the end user in the case of generation.

S is the sum of the percentages for all network levels in the distribution network above and including the network level of the end user in the case of demand, and up to and excluding the network level of the end user in the case of generation.

U is the ratio of the sum of the DNO Party's total incentive revenue and the transmission exit charge, and the DNO Party's total Allowed Revenue including any incentive revenue and transmission exit charge.

[Network length split for 132kV] and [Network length split for EHV] are currently set to 100 per cent.

[EHV and 132kV direct cost proportion] is as calculated in paragraph 32.

GLOSSARY OF TERMS USED IN THIS SCHEDULE

47 Expressions used in this Schedule shall be interpreted in accordance with Schedules 16, 17 and 18.

SCHEDULE 30: NOT USED

SCHEDULE 31: EMBEDDED CAPACITY REGISTER

1. INTRODUCTION

1.1 This Schedule 31 governs the content and format of the Embedded Capacity Registers which DNO/IDNO Parties are required to publish under Clause 35C.

2. CONTENT OF THE EMBEDDED CAPACITY REGISTER

2.1 On the date on which this Schedule 31 comes into effect, the Panel shall instruct the Secretariat to upload version 1.0 of the Embedded Capacity Register to the Website, with such version being that which was jointly agreed upon by the majority of DNO/IDNO Parties as part of the Change Proposal via which this Schedule 31 was created.

2.2 Each DNO/IDNO Party shall use the version published by the Secretariat on the Website, as updated from time to time in accordance with Paragraph 3 (the "**Agreed Version**").

2.3 The Secretariat shall ensure that all DNO/IDNO Parties are informed of the specific location on the Website at which the Agreed Version is held and the means by which they have access to it.

2.4 For each site that meets the criteria to be included in its Embedded Capacity Register, each DNO/IDNO Party shall use reasonable endeavours to populate all fields in the Embedded Capacity Register. Where the DNO/IDNO Party does not hold data for a specific field for a specific site, then the DNO/IDNO Party will populate the relevant field with the words 'data not available'.

2.5 Each DNO/IDNO Party shall populate the fields in its Embedded Capacity Register in accordance with and by reference to the definitions in the Agreed Version.

2.6 Each DNO/IDNO Party shall provide for the following in its Embedded Capacity Register:

2.6.1 contact details for use by anyone viewing the Embedded Capacity Register, to enable that person to direct any questions to or to be able to notify the relevant DNO/IDNO Party as to any potential errors with respect to the details for a site so that corrections can be made;

2.6.2 the date on which the Embedded Capacity Register was last updated;

2.6.3 to the extent that the DNO/IDNO Party publishes such information, links to any regional maps showing the area covered by the Embedded Capacity Register; and

2.6.4 to the extent that the DNO/IDNO Party publishes such information, links to any heat maps (showing capacity constraints) for the area covered by the Embedded Capacity Register.Capacity Register:

3. AMENDMENTS TO THE EMBEDDED CAPACITY REGISTER

3.1 The Panel shall oversee the process by which the Agreed Version of the Embedded Capacity Register may be altered. Such alteration may include the addition to or removal from the Agreed Version of a specific data item, and/or the alteration of the definition of a data item.

3.2 Any person (whether or not a Party) may, at any time, apply to the Panel requesting that the Agreed Version is altered by notice in writing to the Panel Secretary.

3.3 Where the Panel Secretary receives such an application, it shall ensure that the matter is added to the agenda for the next Panel meeting occurring more than 10 Working Days after receipt of such application, and shall give notice to all the Parties at least 10 Working Days before the Panel meeting in question:

3.3.1 setting out the identity of the person that made the request;

3.3.2 specifying the date on which the Panel is due to consider the matter; and

3.3.3 inviting representations or objections with respect to the request before that date.

3.4 Where representations or objections are made in accordance with Paragraph 3.3, the Panel Secretary shall, as soon as reasonably practicable after receipt thereof and unless such representations or objections have been marked as confidential, provide such representations or objections alongside the request itself via publication with the relevant meeting documentation on the Website.

3.5 Following an application under Paragraph 3.2, the Panel shall resolve whether to accept the requested alteration to the Agreed Version. In passing such a resolution, the Panel may impose such conditions as it sees fit, including specifying whether a transition period is to apply and the term of any such transition period.

3.6 Where the Panel passes a resolution in accordance with Paragraph 3.5, it shall instruct the Secretariat to (a) publish an updated Agreed Version on the Website; and (b) notify DNO/IDNO Parties that an updated version has been published, including a description of how the Agreed Version has been altered, details of any transition period or other applicable conditions, and a link to the location of the Agreed Version on the Website.

SCHEDULE 32: RESIDUAL CHARGING BANDS

1. SCOPE

1.1 Residual charges are levied once forward-looking charges have been applied, to ensure the DNO Party recovers the revenue allowed under the price control conditions.

1.2 In the case of Unmetered Supplies, all residual charges will be applied on a consumption basis, so premises which receive Unmetered Supplies are not subject to this Schedule.

1.2A Furthermore, premises with a Back-up Connection will not be subject to residual charges in respect of the Back-up Connection. One or more premises connected via a Back-up Connection will not be counted as a Single Site in their own right (and so cannot be assessed as a separate Final Demand Site for the purposes of residual charging), but those premises will still comprise or form part of the Single Site connected pursuant to the Connection Agreement governing the primary connection.

1.3 Subject to Paragraph 1.2 and 1.2A, residual fixed charges will be applied to all premises other than Non-Final Demand Sites.

1.4 This Schedule describes how the charging bands for residual fixed charges are to be determined in respect of Non-Domestic Premises. Domestic Premises are allocated to a single charging band and are not therefore covered by this Schedule.

1.5 Non-Domestic Premises which are Final Demand Sites are divided into a number of groups as follows (as such groups are further described in Schedule 16 and Schedule 17 or 18):

a. Designated EHV Properties
b. Designated Properties connected at HV;
c. Designated Properties connected at LV, with a Maximum Import Capacity as the basis for their current Use of System Charge; and
d. Designated Properties connected at LV, without a Maximum Import Capacity as the basis for their current Use of System Charges.

1.6 Each of these groups will then be sub-divided into four charging bands based on the criteria set out in Paragraph 2.1.

1.7 These charging bands will be reviewed periodically and be implemented effective from the beginning of each onshore electricity transmission owner price control period.

1.8 This Schedule sets out:

a. the process for the initial determination of the charging bands for each group of Final Demand Sites to apply from 1 April 2022 to 31 March 2026 (see Paragraph 2)
b. the process to be used to review and determine the charging bands for subsequent onshore electricity transmission owner price control periods (see Paragraph 3);
c. the process for allocating Final Demand Sites to each of those charging bands (see Paragraph 4); and
d. the processes via which a site can be moved from one charging band to another part way through an onshore electricity transmission owner price control period (see Paragraphs 5, 5A, 6 and 7).

1.9 The Use of System tariffs that will be applicable to each of the groups of Final Demand Sites identified under Paragraph 1.5 will be defined in Schedule 16, 17 or 18.

1.10 The DNO/IDNO Party will use the criteria in the table below to determine whether a Single Site is considered to be a Final Demand Site or a Non-Final Demand Site, and therefore whether or not to apply the residual

fixed charge to that site.

Criteria	Meets the criteria	Outcome
DNO/IDNO Party has been provided with valid certification that a Single Site is an Non Final Demand Site	Yes	Single Site is a Non-Final Demand Site
	No	Single Site is a Final Demand Site

2. INITIAL DETERMINATION OF CHARGING BANDS

2.1 On or before 30 September 2020, each DNO/IDNO Party shall provide to the Banding Agent the following information (and shall take reasonable steps to ensure that such information is accurate):

a. for each Final Demand Site within the groups identified in Paragraph 1.5 (a), 1.5 (b) or 1.5 (c), the Maximum Import Capacity used as the basis for the Use of System Charge billed by the DNO/IDNO Party in August 2020, which will be in respect of the Maximum Import Capacity held as at July 2020; and
b. for each Final Demand Site within the group identified in Paragraph 1.5 (d):

i. if half hourly settled, a calculated estimate of the annual metered import consumption prior to August 2020; or
ii. if non-half hourly settled, the Estimated Annual Consumption from the August 2020 P0222 Report (or, if that is not available, the most recent Estimated Annual Consumption from an earlier P0222 Report).

2.2 On or before 31 October 2020, the Banding Agent shall provide to each DNO/IDNO Party the boundaries of each charging band for each of the groups of Final Demand Sites identified under Paragraph 1.5, such boundaries being at the 40th, 70th and 85th percentiles when all the Final Demand Sites in the given group (on a GB-wide basis) are listed in ascending order of Maximum Import Capacity or annual consumption (using the figures provided under Paragraph 2.1).

2.3 Each of these boundaries will then be rounded-up to the nearest kVA/kWh integer.

2.4 These rounded boundaries will then be used to identify four charging bands within each of the groups of Final Demand Sites identified under Paragraph 1.5 as follows:

a. Residual Charging Band 1: where the Maximum Import Capacity or annual consumption (as applicable) is less than or equal to the 40th percentile band boundary
b. Residual Charging Band 2: where the Maximum Import Capacity or annual consumption (as applicable) is greater than the 40th percentile band boundary and less than or equal to the 70th percentile band boundary;
c. Residual Charging Band 3: where the Maximum Import Capacity or annual consumption (as applicable) is greater than the 70th percentile band boundary and less than or equal to the 85th percentile band boundary; and
d. Residual Charging Band 4: where the Maximum Import Capacity or annual consumption (as applicable) is greater than the 85th percentile band boundary.

2.5 On or before 31 December 2020, each DNO/IDNO Party shall provide each Supplier Party with a list of each and every MPAN associated with a Non-Domestic Premises that is connected to the DNO/IDNO Party's Distribution System, identifying the charging band to which each such MPAN has been allocated, the LLFC Id which is assigned to the MPAN, and the provisional LLFC Id which will be assigned to the MPAN with effect from 1 April 2022.

3. REVIEW OF CHARGING BANDS

3.1 On or before 31 March in the Regulatory Year (t-3) three years prior to the commencement of the onshore electricity transmission owner price control period (t), each DNO/IDNO Party shall provide to the Banding Agent the following information (and shall take reasonable steps to ensure that such information is accurate):

a. for each Final Demand Site within the groups identified in Paragraph 1.5 (a), 1.5 (b) or 1.5 (c), the Maximum Import Capacity used as the basis for the Use of System Charge billed by the DNO/IDNO Party in February of that Regulatory Year, which will be in respect of the Maximum Import Capacity held as at January in that Regulatory Year.

b. for each Final Demand Site within the group identified in Paragraph 1.5 (d):

i. if half hourly settled, a calculated estimate of the annual metered import consumption or for MHHS where available the Annual Consumption in the IF-040 Report prior to February of that Regulatory Year; or

ii. if non-half hourly settled, the Estimated Annual Consumption from the P0222 Report for the February of that Regulatory Year (or, if that is not available, the most recent Estimated Annual Consumption from an earlier P0222 Report).

3.2 On or before 30 April following the 31 March referred to in Paragraph 3.1, the Banding Agent shall provide to each DNO/IDNO Party the boundaries for each charging band for each group of Final Demand Sites on the same basis as that set out in Paragraph 2.2.

3.3 Each of these boundaries will be rounded-up on the same basis as that set out in Paragraph 2.3.

3.4 These rounded boundaries will then be used to identify four charging bands within each of the groups of Final Demand Sites identified under Paragraph 1.5 on the same basis as that set out in Paragraph 2.4.

3.5 On or before 30 June following the 31 March referred to in Paragraph 3.1, each DNO/IDNO Party shall provide each Supplier Party with a list of each and every MPAN associated with a Non-Domestic Premises that is connected to the DNO/IDNO Party's Distribution System, identifying the charging band to which each such MPAN has been allocated (in accordance with the allocation rules in Paragraph 4).

3.6 The charging bands revised in accordance with this Paragraph 3 will be applicable from the commencement of the next onshore electricity transmission owner price control period commencing after completion of the review under this Paragraph 3.

4. ALLOCATION OF CUSTOMERS TO CHARGING BANDS BY DNO/IDNO PARTIES

4.1 For Final Demand Sites within the groups identified in Paragraph 1.5 (a), 1.5 (b) or 1.5 (c), each DNO/IDNO Party shall allocate its Final Demand Sites to the relevant charging band based on the following criteria (subject to Paragraph 4.2A):

a. if 24 months of data is available, the average Maximum Import Capacity over that period; or if not available
b. allocation to a charging band will be based on the following criteria:

i. the average of Maximum Import Capacity over that period for which data is available; or

ii. if no such data is available, other available information that is appropriate for a typical profile of a similar site to best estimate the expected demand of the Final Demand Site.

4.2 For Final Demand Sites within the group identified in Paragraph 1.5 (d), each DNO/IDNO Party shall allocate its Final Demand Sites to the relevant charging band based on the following criteria (subject to Paragraph 4.2A):

a. for a Final Demand Site that is half hourly settled:

i. if 24 months of data is available, the average annual import consumption based on metered data over the 24 months; or if not available

ii. when a minimum of 12 months of data is available, the average annual import consumption over the period for which metered data is available or for MHHS where available the Annual Consumption in the IF-040 Report; or if not available

iii. other available information that is appropriate for a typical profile of a similar site to best estimate the expected annual import consumption of the Final Demand Site; or

b. for a Final Demand Site that is non-half hourly settled:

i. the most recent Estimated Annual Consumption for that Final Demand Site; or if not available

ii. the Default Estimated Annual Consumption for that class of Final Demand Site; or if not available

iii. other available information that is appropriate for a typical profile of a similar site to best estimate the expected annual import consumption of the Final Demand Site.

4.2A If a Final Demand Site has been reallocated to a different charging band in accordance with Paragraph 6.1 or 7.17 with effect from a time which falls within the 24 months before the time of the assessment under Paragraph 4.1 or 4.2, then the time period used for the purposes of such assessment shall be the time since the date when the last band reallocation became effective.

4.3 Each Final Demand Site will be allocated in accordance with Paragraphs 4.1 to 4.2A to the charging band where its capacity or consumption (as applicable) is greater than the minimum threshold for that charging band, and less than or equal to the maximum threshold for that charging band (as determined under Paragraph 2 or 3).

4.4 The allocation of each Final Demand Site will be re-assessed by the DNO/IDNO Party prior to the start of each onshore electricity transmission owner price control period, following the relevant review under Paragraph 3.

4.5 Subject to Paragraphs 4.6 and 5A, Final Demand Sites will remain in a charging band for the duration of the onshore transmission owner price control period, subject to any exceptional circumstances as defined in Paragraph 6 and/or a successful dispute as defined in Paragraph 7.

4.6 During the period to 31 October 2021, a site may be re-classified as a Final Demand Site (from a Non-Final Demand Site) or as a Non-Final Demand Site (from a Final Demand Site) in accordance with Paragraph 5.

5. TRANSITIONAL PERIOD AS A RESULT OF A RE-CLASSIFICATION OF A SINGLE SITE

5.1 Subject to Paragraph 5.3, a DNO/IDNO Party shall no longer treat a Single Site as a Final Demand Site (and shall re-classify it as a Non-Final Demand Site) if the DNO/IDNO Party has, by no later than 31 July 2021,

been provided with the certification necessary to satisfy the definition of a Non-Final Demand Site.

5.2 Subject to Paragraph 5.3, a DNO/IDNO Party shall no longer treat a Single Site as a Non-Final Demand Site (and shall re-classify it as a Final Demand Site) if the DNO/IDNO Party has not, by 31 July 2021, been provided with the certification necessary to satisfy the definition of a Non-Final Demand Site.

5.3 Where Paragraph 5.1 or 5.2 applies, the DNO/IDNO Party will notify the relevant Customer's import/export Registrant(s) of the re-classification and the new charging band by 31 August 2021. A Customer, its Registrant or an agent authorised to act on the Customer's behalf (in each such case, the 'appointed agent') can challenge the new charging band by notifying the DNO/IDNO Party of such challenge by no later than 30 September 2021. Where a DNO/IDNO Party and the Customer (or its appointed agent) cannot come to an agreement with respect to the new charging band by 31 October 2021, then the charging band determined by the DNO/IDNO Party shall be used (subject to Paragraphs 5A, 6 and/or 7).

5A. RE-CLASSIFICATION OF A SINGLE SITE

5A.1 A DNO/IDNO Party shall no longer treat a Single Site as a Final Demand Site (and shall re-classify it as a Non-Final Demand Site) if the DNO/IDNO Party at any time has been notified that the Single Site is an Eligible Services Facility and has been provided with the certification necessary to satisfy the definition of a Non-Final Demand Site.

5A.1A For premises with a Back-up Connection which were previously treated as a separate Final Demand Site (in addition to being treated as comprising or forming part of another Final Demand Site pursuant to the primary connection), where the evidence necessary to satisfy the definition of a Back-up Connection has been provided to and accepted by the DNO/IDNO Party, no residual charges shall apply to those premises in respect of the Back-up Connection.

5A.2 Where Paragraph 5A.1 or 5A.1A applies the:

a. DNO/IDNO Party will notify the relevant Customer's import/export Registrant(s) of the re-classification by the end of the following month
b. re-classification shall apply from the next billing period; and
c. the Registrant may be eligible for a rebate (applied from the date on which the DNO/IDNO Party received the necessary certification under Paragraph 5A.1 or the necessary evidence under Paragraph 5A.1A).

6. EXCEPTIONAL CIRCUMSTANCES AND ANNUAL ALLOCATION REVIEW RESULTING IN RE-ALLOCATION TO A DIFFERENT BAND WITHIN A PRICE CONTROL PERIOD

Exceptional circumstances

6.1 A Final Demand Site may be reallocated to a different charging band if one or more of the following criteria apply (following the Final Demand Site's allocation to a charging band under Paragraph 4):

a. the voltage of connection of the Final Demand Site changes

b. the Final Demand Site has a change of use or change of site configuration, and this is reflected by a significant change (as further described in Paragraph 6.3) to its:

i. Maximum Import Capacity; or

ii. forecast annual consumption;

c. the Final Demand Site moves from one of the groups identified in Paragraph 1.5 to another, and as a result it becomes a site for which the Maximum Import Capacity is to be used under Paragraph 2.1 (when annual consumption was previously to be used) or becomes a site for which annual consumption is to be used under Paragraph 2.1 (when Maximum Import Capacity was previously to be used); and/or

d. the Final Demand Site is a Phased Capacity Site.

6.2 Where a Customer or its Registrant applies to the DNO/IDNO Party to have a Final Demand Site reallocated as described in Paragraph 6.1(b), such application must be accompanied by:

a. for Paragraph 6.1(b)(i), a signed Connection Agreement for the Final Demand Site, and a signed letter from the Customer's company director (or equivalent) confirming exceptional and significant changes to the use of the site; or
b. for Paragraph 6.1(b)(ii), a signed letter from the Customer's company director (or equivalent) confirming exceptional and significant changes to consumption (including historical consumption) for the Final Demand Site and the reason for the change of use or change of site configuration.

6.3 The exceptional circumstances described in Paragraph 6.1(b) will be subject to the following materiality thresholds, as applicable:

a. (subject to Paragraph 6.3(b)) for Final Demand Sites allocated in accordance with Paragraph 4.1(a) or 4.1(b)(i), the Maximum Import Capacity at the Final Demand Site must have either increased or decreased by more than 50 percent in comparison to the Maximum Import Capacity of the Final Demand Site at the end of the period used for the purposes of such allocation (and the average Maximum Import Capacity is not to be used as the comparator);
b. for Final Demand Sites allocated in accordance with Paragraph 4.1(a) or 4.1(b)(i) and then re-allocated under Paragraph 6.1, the Maximum Import Capacity at the Final Demand Site must have either increased or decreased by more than 50 percent in comparison to the Maximum Import Capacity of the Final Demand Site at the end of the period used for the purposes of such re-allocation (and the average Maximum Import Capacity is not to be used as the comparator);
c. Final Demand Sites allocated in accordance with Paragraph 4.1(b)(ii) may only be re-allocated under Paragraph 6.1 following their re-allocation under Paragraph 6.7, and only if the Maximum Import Capacity at the Final Demand Site has either increased or decreased by more than 50 percent in comparison to the Maximum Import Capacity of the Final Demand Site at the end of the period used for the purposes of such re-allocation (and the average Maximum Import Capacity is not to be used as the comparator); and/or
d. for Final Demand Sites allocated under Paragraph 4.2 (whether or not re-allocated under this Paragraph 6), the forecast annual consumption at the Final Demand Site must have increased or decreased by more than 50 percent in comparison to the consumption which was used for the purposes of the allocation which the applicant is seeking to have changed.

6.4 Reallocation of a Final Demand Site to a different charging band may result in the Registrant for the Final Demand Site being either eligible for a rebate (which shall be backdated to the time when the request was received) or subject to an additional charge (which shall be backdated to the date on which the DNO/IDNO Party notified the Registrant of the charge's application). The revised charging band will be applied from the next billing period.

6.4A Where Paragraph 6.1(d) applies, the DNO/IDNO Party shall, each time that the Maximum Import Capacity of the Phased Capacity Site is increased, re-allocate the Final Demand Site based on the revised Maximum Import Capacity.

Annual allocation review of new Final Demand Sites including those allocated based on no recorded data

6.5 Subject to Paragraph 6.6, each September, each DNO/IDNO Party shall review the allocation of all Final Demand Sites allocated to a charging band in accordance with Paragraph 4.1(b)(ii), Paragraph 4.2(a)(iii), Paragraph 4.2(b)(ii) and Paragraph 4.2(b)(iii). This is known as the "Annual Allocation Review" and may result in a Final Demand Site being reallocated from its current charging band (the "Old Charging Band") to a new charging band (the "New Charging Band").

6.6 Without prejudice to Paragraph 6.1, once each Final Demand Site has been allocated in accordance with Paragraph 4, it will be subject to the Annual Allocation Review only once.

6.7 For Final Demand Sites allocated in accordance with Paragraph 4.1(b)(ii), and where a Final Demand Site has a minimum of 12 months of Maximum Import Capacity data up to and including 30 June of that year, the Final Demand Site will be reallocated based on the average Maximum Import Capacity over that period.

6.8 For Final Demand Sites allocated in accordance with Paragraph 4.2(a)(iii), and where a Final Demand Site has a minimum of 12 months metered import consumption data up to and including 30 June of that year, the Final Demand Site will be reallocated based on the average annual import consumption over that period.

6.9 For Final Demand Sites allocated in accordance with Paragraph 4.2(b)(ii) or Paragraph 4.2(b)(iii), and where a Final Demand Site has an Estimated Annual Consumption which is not a Default Estimated Annual Consumption from a P0222 Report up to and including May of that year, the Final Demand Site will be reallocated based on the most recent Estimated Annual Consumption which is not a Default Estimated Annual Consumption.

6.10 On or before 15 September of the Annual Allocation Review, the DNO/IDNO Party shall provide each Supplier Party with a list of each and every MPAN associated with a Non-Domestic Premises that is connected to the DNO/IDNO Party's Distribution System that has been reallocated to a New Charging Band as a result of the Annual Allocation Review, identifying the Old Charging Band and the New Charging Band and LLFC Id or for MHHS the DUoS Tariff ID to which each such MPAN has been reallocated.

6.11 The New Charging Band will be effective from the later of 1 August of the prior year or the date on which the Old Charging Band was applied. Charging band reallocations are actioned by amending the LLFC Id or for MHHS the DUoS Tariff ID assigned to the MPAN, which must be completed by the DNO/IDNO Party before the date of the Final Reconciliation Settlement Run (as defined in the BSC) for 1 August of the prior year.

6.12 Reallocation of a Final Demand Site to a New Charging Band in accordance with Paragraph 6.11 may result in the Registrant for the Final Demand Site being either eligible for a rebate or subject to an additional charge.

7. DISPUTES

Initial Notification

7.1 Each DNO/IDNO Party shall take reasonable steps to ensure that each Final Demand Site is allocated to the correct charging band (as determined in accordance with this Schedule).

7.2 Where the Customer or its Registrant or an agent authorised to act on the Customer's behalf (in either case, being the 'appointed agent'), has contacted a DNO/IDNO Party with sufficient information disputing the allocation to a charging band of a Customer's Final Demand Site, then that DNO/IDNO Party shall be required to investigate. Such an investigation shall be carried out using the information provided by the

Customer or its appointed agent and the information available to the DNO/IDNO Party. The DNO/IDNO Party will initiate good faith negotiations with any such Customer or its appointed agent to find a resolution to the dispute.

Formal Dispute Notice

7.3 Where a DNO/IDNO Party and the Customer or its appointed agent cannot come to an agreement with respect to a Final Demand Site's allocation to a charging band, then the Customer or its appointed agent may send a formal dispute notice (a **"Dispute Notice"**) to the Secretariat, which shall:

a. be in the format of any proforma made available for such purpose on the Website; and
b. contain a detailed description of the Customer's case for why the Final Demand Site should be reallocated to a different charging band, including reasonable evidence to support the dispute.

7.4 Where the Secretariat receives a Dispute Notice, it shall within two Working Days, issue the Dispute Notice to the relevant DNO/IDNO Party. Upon receipt of the Dispute Notice, the relevant DNO/IDNO Party shall provide its case for why the Final Demand Site should not be reallocated, and shall send this to the Secretariat within 10 Working Days.

7.5 Following receipt of the relevant section of the Dispute Notice completed by the DNO/IDNO Party, the Secretariat shall issue the whole Dispute Notice to both parties to the dispute and request that the Customer or its appointed agent provide confirmation that it wishes to progress the dispute to the Disputes Committee. Upon issuing the whole Dispute Notice, the Secretariat shall notify each recipient that progression to the Disputes Committee is subject to such confirmation, which is time limited to 10 Working Days. If no such confirmation is received by the Secretariat within such period, the Secretariat shall not put the dispute before the Disputes Committee and the dispute shall be considered closed.

7.6 Any additional information received from either party to the dispute as a consequence of the information shared under Paragraph 7.5 will be added by the Secretariat to the Dispute Notice for consideration by the Disputes Committee.

Disputes Committee

7.7 The Panel shall establish a Working Group to be known as the Disputes Committee for the purpose of facilitating the resolution of an unresolved disputes between DNO/IDNO Parties and Customers or their appointed agents. The remit of the Disputes Committee shall only be in respect of Dispute Notices for which confirmation has been received in accordance with Paragraph 7.5.

7.8 The Disputes Committee shall consist of:

a. three individuals elected by the DNO/IDNO Parties, each with an alternate
b. three individuals elected by the Supplier Parties, each with an alternate,
c. any additional individuals appointed by the Authority in accordance with Paragraph 7.9; and
d. any of the currently serving Panel Members but only acting in that capacity when called upon by a member of the Disputes Committee or the Secretariat to act in the capacity of a reserve member, where a scheduled meeting of the Disputes Committee would not otherwise be quorate.

7.9 Where at any time, the Authority considers that there is a class or category of person having an interest in the distribution of electricity in Great Britain whose interests are not adequately represented in the composition of the Disputes Committee at that time, and whose interests would be better represented if a particular individual was appointed as an additional Disputes Committee member, the Authority may (by notice to the Panel and the Secretariat) appoint that particular individual as a Disputes Committee member.

The Authority may, at any time thereafter by notice to the Panel and the Secretariat, remove that individual from the Disputes Committee.

7.10 The following persons shall be entitled to attend and speak (but not vote) at any meeting of the Disputes Committee:

a. one person appointed from time to time, by notice to the Secretariat, by the Authority; and
b. one person appointed from time to time, by notice to the Secretariat, by the Consumer Body (Citizens Advice and Citizens Advice Scotland acting together to jointly appoint one person).

7.11 Dispute Committee members and their alternates:

a. shall be elected in accordance with the provisions for the election of Panel Members, except where such provisions could only apply to the election of the Panel Members themselves; and
b. shall be subject to the same term of office and removal of office process and timeline as that of the Panel Members.

Meetings of the Disputes Committee

7.12 All meetings of the Disputes Committee shall be convened by the Secretariat in accordance with the Dispute Committee's terms of reference.

7.13 The notice of each Disputes Committee meeting shall contain the time, date and venue and/or teleconference/web conference details, and an agenda and any supporting papers for, the relevant meeting (including the Dispute Notice). The Secretariat shall circulate amendments to the agenda where necessary.

7.14 For a meeting of the Disputes Committee to be quorate, a minimum of three members must attend, at least one of whom must have been elected by the Supplier Parties and at least one of whom must have been elected by the DNO/IDNO Parties; and all of whom must be independent of the dispute (meaning that none of the parties to the dispute are a Related Person of the member).

7.15 A decision to reallocate a Final Demand Site from one charging band to another requires a vote in favour by a simple majority of the Disputes Committee members who vote at the meeting. Such a decision shall be binding for the purposes of this Agreement, but is without prejudice to any statutory rights that the Customer may have.

7.16 The data on the Dispute Notice is confidential and can only be viewed by the Disputes Committee, the DNO/IDNO Party which the dispute is against, the Customer (and/or its appointed agent) which raised the dispute, the Secretariat, and the Authority.

7.17 Where the decision of the Disputes Committee is that a Final Demand Site be reallocated from one charging band to another, the Registrant for the Final Demand Site will be eligible for a rebate. The rebate for that Final Demand Site will be backdated to the time when the analysis shows that the Customer was first charged the incorrect residual fixed charge, up to a maximum of six years (five years in Scotland). The revised charging band will be applied from the next billing period.

8. DEFINITIONS

8.1 Words beginning with a capital letter that are not otherwise defined in this Schedule have the meanings given to then in Clause 1 of the main body of this Agreement, and the rules of interpretation set out in that Clause 1 also apply.

8.2 In this Schedule, unless the context otherwise requires, the expressions below shall have the meanings set out below:

Active Power	the product of the voltage, current and cosine of the phase angle between them, measured in watts.
Ancillary Services	has the meaning given to that term in the CUSC.
Annual Consumption	has the meaning given to the term in the Energy Market Data Specification.
Back-up Connection	means a back-up connection to the DNO/IDNO Party's Distribution System which can only be used at times when the capacity provided via another (primary) connection to the DNO/IDNO Party's Distribution System is unavailable. The back-up connection must not be capable of being used in parallel with the primary connection, and the back-up connection must be for the same or a smaller capacity than the primary connection (when the back-up connection capacity is aggregated with the capacity of any and all other back-up connections associated with the same primary connection). A connection shall only be classified as a Back-up Connection if the Customer has provided the DNO/IDNO Party with clear supporting documentary evidence to the reasonable satisfaction of the DNO/IDNO Party.
Balancing Services	has the meaning given to that term in the Electricity System Operator Licence.
Banding Agent	is the Independent System Operator and Planner or its appointed agent, as notified by the Independent System Operator and Planner to the DNO/IDNO Parties from time to time.
Customer	for each Single Site, is either the user as described in Schedule 16, or the EHV Customer as described in Schedule 17 and Schedule 18.
Default Estimated Annual Consumption	has the meaning to that term in the Balancing & Settlement Code.
Disputes Committee	is the committee established under Paragraph 7.7.
Estimated Annual Consumption or EAC	as the meaning to that term in the Balancing & Settlement Code
Electricity Storage	is the conversion of electrical energy into a form of energy which can be stored, the storing of that energy, and the subsequent reconversion of that energy back into electrical energy.
Electricity Generation	is the process of generating electricity.
Eligible Services	shall mean any Balancing Services or Ancillary Services which imports or exports Reactive Energy but does not result in the production or export of any Active Power to the DNO/IDNO Party's Distribution System.
Eligible Services Facility	means a Single Site that can only and solely provide Eligible Services to the Independent System Operator and Planner and does not undertake Electricity Storage or Electricity Generation or consume any Active Power other than for the provision of the Eligible Services.
Final Demand	means electricity which is consumed other than for the purposes of generation or export onto the electricity network.
IF-040 Report	is the IF-040 Report 'Notification of Annual Consumption' produced and submitted by the Market-wide Data Service in accordance with BSCP703.
LLFC Id	has the meaning given in the Energy Market Data Specification to the expression **'Line Loss Factor Class Id'**.
Non-Domestic Premises	means premises which are not Domestic Premises.
Non-Final Demand Site	is a Single Site: a. at which either or both Electricity Storage and/or Electricity Generation occurs (whether the facility(ies) at the site are operating or being commissioned, repaired or decommissioned), and that has an export Metering Point or Metering System and an import Metering Point or Metering System with associated metering equipment which only measures export from Electricity Storage and/or Electricity Generation and import for or directly relating to Electricity Storage and/or Electricity Generation (and not export from another source and/or import for another activity); or b. which is an Eligible Services Facility; and (in the case of either (a) or (b)): i. if registered in MPAS, is subject to certification from a Supplier Party that the site meets the criteria in paragraph (a) or (b) above, which certificate has been provided to the DNO/IDNO Party; or ii. if registered in CMRS, is subject to certification from the Customer (or its CVA Registrant) that the site meets the criteria in paragraph (a) or (b) above, which certificate has been provided to the DNO/IDNO Party.
P0222 Report	is the P0222 'EAC Data to Distributor Data Report' as set out in Balancing and Settlement Code Procedure (BSCP) 505 'Non Half Hourly Data Aggregation For SVA Metering Systems Registered in SMRS'.

Phased Capacity Site	means a Final Demand Site whose Maximum Import Capacity will change in line with a development phase as agreed with the DNO/IDNO Party.
Reactive Energy	has the meaning given to that term in the Balancing and Settlement Code.
Registrant	for each Metering Point or Metering System, the Supplier Party or CVA Registrant that is Registered for that Metering Point or Metering System.
Single Site	means one or more Non-Domestic Premises that are connected to the DNO/IDNO Party's Distribution System pursuant to a single Connection Agreement (whether a Bespoke Connection Agreement or one created via the National Terms of Connection). In making this assessment, the Connection Agreements for Back-up Connections will be disregarded, so that: (a) premises with a single Connection Agreement which is not for a Back-up Connection and one or more Connection Agreements which are for Back-up Connections will be treated as a Single Site; and (b) premises connected pursuant to the Connection Agreement governing the Back-up Connection will not be treated as a separate Single Site (but will still comprise or form part of the Single Site connected pursuant to the Connection Agreement governing the primary connection).

SCHEDULE 33: DISCONNECTIONS

1. INTRODUCTION

Purpose

1.1 This Schedule sets out the processes that DNO/IDNO Parties and Supplier Parties shall undertake in order to ensure that disconnection of one or more Metering Points will result in a successful De-registration of a Metering Point.

Scope and Objectives

1.2 The scope of this Schedule is limited to governance and procedures related to the carrying out of Physical Disconnections and Logical Disconnections, and subsequent De-registration of Metering Points, save where the affected Metering Points relate to one or more Unmetered Supplies.

1.3 The objectives of this Schedule are to:

a. document procedures for the management of Physical Disconnections;
b. document procedures for the management of Logical Disconnections;
c. establish communication methods for the capture and transfer of information as required by DNO/IDNO Parties, Supplier Parties, and MPAS Providers to carry out disconnections and subsequent de-activation of Metering Points; and
d. define the processes relating to the passing of data between parties in relation to disconnections.

Exclusions

1.4 The following are specifically excluded from the scope of this Schedule:

a. matters relating to the contractual arrangements between a DNO/IDNO Party and a Customer;

b. any costs relating to asset recovery by a Supplier Party;

c. private network disconnections; and

d. matters relating to the disconnection of Unmetered Supplies that fall under the governance of the Balancing and Settlement Code (BSC).

Glossary of Terms

1.5 Words beginning with a capital letter that are not otherwise defined in this Schedule have the meanings given to then in Clause 1 of the main body of this Agreement, and the rules of interpretation set out in that Clause 1 also apply.

1.6 In this Schedule unless the context otherwise requires, the expressions below shall have the meanings set out below.

Active Green Deal Plan	means a Green Deal Plan for which Green Deal Charges are scheduled or expected to be scheduled, as indicated by the fact that the associated Metering Point is indicated as being a Green Deal Metering Point.
Customer	has the meaning given to that term in 3.2 of this Schedule.
Data Flow	has the meaning given to that term in the Energy Market Data Specification
Disconnection Programme	means a situation in which multi-site Physical Disconnections at several sites are required to take place as part of a planned programme of works.
Green Deal	means the green deal scheme established pursuant to Part 1, Chapter 1 of the Energy Act 2011
Green Deal Charges	means payments required to be made under a Green Deal Plan by a Green Deal Bill Payer, as referred to in section 1(6) of the Energy Act 2011

Green Deal Metering Point	means any Metering Point where data items 'GD MPAN ETD' and 'GD MPSAN EFD' together indicate there is a Green Deal Plan in respect of the relevant premises
Green Deal Plan	has the meaning given to "green deal plan" in section 1(3) of the Energy Act 2011
Logical Disconnection	means the activities relating to the De-Registration of a Metering Point, where this is due to a change to the supply making one or more MPANs redundant.
Meter Serial Number	means the unique identifier for an individual meter point device.
Physical Disconnection	means the removal of the electrical supply to a Metering Point, including any activities required to make safe.
Section 80 Notice	means a notice of intended demolition made to a local authority in accordance with Section 80 of the Building Act 1984
Section 81 Notice	means a notice issued by a local authority in accordance with Section 81 of the Building Act 1984.
Secure Data Exchange Portal	has the meaning given to that term in the Retail Energy Code

2. CONTEXT

2.1 Where a person is seeking to commence demolition works to individual premises (one or many) or units, it is anticipated that they are likely to contact the relevant DNO/IDNO Party in the first instance in order to arrange for any residual electricity supply to be made safe.

2.2 A DNO/IDNO Party may decide to provide a quote and require to be paid for the work required in carrying out the Disconnection. In order to provide the quotation, the DNO/IDNO Party will need to collect and collate a variety of information.

2.3 There will also be instances whereby a person may first contact a Supplier Party directly, for example in relation to a single residential property. In these cases, the Supplier Party shall advise that person that the disconnection process is led by the DNO/IDNO Party, and may offer to take the relevant information from them and send it to that DNO/IDNO Party.

2.4 The intent of this Schedule is to provide a standard process such that each multi-site Disconnection Programme, single-site Physical Disconnection or any Logical Disconnection can be completed through key steps and information exchanges to ensure it is completed successfully for all impacted organisations.

3. PRINCIPLES

3.1 A Disconnection Programme relates to situations where more than one Physical Disconnection will be required.

3.2 It is expected that organisations initiating Disconnection Programmes via contact with the DNO/IDNO Party might include local authorities, social landlords, and building developers. For the purpose of this Schedule, these organisations and any property owner (or other person acting on their behalf) are collectively referred to as the “Customer”, meaning the person that is the requestor of the Disconnection(s).

3.3 In the event of a Disconnection Programme, it is anticipated that the DNO/IDNO Party will drive the process as the party with whom the Customer contracts and whom the Customer will pay to facilitate the physical work required to Disconnect the supplies.

3.4 The DNO/IDNO Party shall remain the primary point of contact with the Customer throughout the Physical Disconnections procedure, and shall ensure that the Supplier Party and other market participants are kept informed in accordance with relevant governance, including this Schedule.

3.5 Where the Customer contacts a Supplier Party first in respect of a Physical Disconnection, the Supplier Party shall advise the Customer that the process is led by the DNO/IDNO Party and may offer to collect the relevant information the DNO/IDNO Party needs and send it to them via a Data Flow.

3.6 Nothing in this Schedule shall relieve Parties of any of their obligations in respect of any Energy Code.

3.7 There are a number of key activities required in order to ensure that a disconnection is completed successfully. This Schedule sets out a logical set of steps, but recognises that some events may occur in parallel for instances both of Physical Disconnections and Logical Disconnections.

3.8 Parties shall provide a point of contact for this procedure, which may be their Contract Manager or such other named individual as that Party nominates.

3.9 Where personal data relating to a Customer is exchanged between Parties for the purposes of this Schedule, this shall be sent via the Secure Data Exchange Portal (except as otherwise stated in this Schedule).

4. SINGLE-SITE PHYSICAL DISCONNECTION

4.1 This procedure is used where a Physical Disconnection is required to take place at a single site, which may include more than one MPAN where associated Metering Points exist.

Step 1 - Customer requests disconnection

Step 1a - Customer contacts DNO/IDNO Party

4.2 Where the Customer contacts the relevant DNO/IDNO Party to agree the details of the Disconnection, and in order to ensure that the DNO/IDNO Party can provide information to the Supplier Party and schedule the work efficiently, the following shall be collected by the DNO/IDNO Party but may be collected prior to the sending of the D0352 Data Flow in relation to the planned Physical Disconnection:

a. address of the property;

b. date from which the Customer will have responsibility for the site, if not already responsible;

c. contact details for the Customer, including name and telephone number for both works relating to any meter asset removal and for site works to disconnect supply; and

d. contact details for site access if different to those for the Customer.

4.3 The following additional information shall be provided prior to the sending of the D0352 Data Flow, but is not critical to begin the Disconnection process:

a. MPAN (s) and Meter Serial Number(s), if known;

b. planned demolition date;

c. earliest dates for both meter removal and disconnection (if meter(s) at site); and

d. whether any Active Green Deal Plans are associated with the Metering Point(s) at the property to be Disconnected.

4.4 Where the Customer is not the person responsible for the property at the time of initial contact, the DNO/IDNO Party may require that a letter of authority be provided. Any such letter shall:

a. clearly identify the person(s) currently responsible for the property; and

b. confirm the Customer's authority to act in relation to the Disconnection of the supplies.

4.5 Where the Customer is not the person responsible for the site, a DNO/IDNO Party shall be under no obligation to undertake any further activities in relation to the Disconnection unless and until the letter referred to in Paragraph 4.4 is provided.

4.6 Once all relevant information is received, the DNO/IDNO Party may provide a quote to the Customer within twenty (20) Working Days, in order to minimise delay to the process.

Step 1b - Customer contacts Supplier Party

4.7 Where the Customer has initially contacted the Supplier Party to arrange for a Disconnection to take place, that Supplier Party shall advise the Customer that the disconnections process is led by the DNO/IDNO Party, but they may offer to take information from the Customer and send it on to the DNO/IDNO Party and inform the Customer that the DNO/IDNO Party will contact them in due course to make arrangements for the Disconnection.

Step 2 - Supplier Party collects Customer information

4.8 Where it elects to obtain information from the Customer, the Supplier Party shall obtain:

a. the address of the property;

b. contact details for the Customer including name and telephone number for both works relating to any meter asset removal and for site works to disconnect supply;

c. MPAN (s); and

d. details of how the Customer wishes to be contacted.

4.9 The Supplier Party shall:

a. identify if an Active Green Deal Plan is associated with the relevant Metering Point and if so, shall advise the Customer that a Metering Point cannot be Disconnected where an Active Green Deal Plan is associated to it; and

b. identify if the relevant Metering Point is a Related Metering Point and if so, shall not un-relate the Metering Point as documented in the Retail Energy Code, until it has received a D0352 *Notification of Physical Disconnections* or the metering system has been removed.

Step 3 - Supplier Party sends Customer information to DNO/IDNO Party

4.10 Where it has collected the information set out in Paragraph 4.8 from the Customer, the Supplier Party shall send it to the DNO/IDNO Party within two (2) Working Days using the D0132 *Details of Disconnection of Supply* Data Flow.

Step 4 - DNO/IDNO Party confirms property and Metering Point(s) affected

4.11 Following either receipt of a D0132 *Details of Disconnection of Supply* Data Flow from the Supplier Party (whereby the DNO/IDNO Party shall attempt to contact the Customer within two (2) Working Days) or at the point the Customer contacts the DNO/IDNO Party directly, that DNO/IDNO Party shall obtain from its MPAS Provider confirmation of:

a. addresses;

b. MPAN (s) for the affected Metering Points (including any indicators of Active Green Deal Plans being associated to a Metering Point); and

c. Supplier Parties impacted by the Disconnection.

4.12 Where the DNO/IDNO Party is not responsible for the affected Metering Point(s), and recognising that the supplies may be on a network which does not fall under Great Britain market arrangements, they shall inform the Customer and (to the extent that such information is available to it), provide information regarding the network operator whom the Customer will need to contact.

Step 5 - DNO/IDNO Party checks for Green Deal Plan(s)

4.13 Where an Active Green Deal Plan is associated to the relevant Metering Point, the DNO/IDNO Party shall inform the Customer of that fact, and that the person responsible for Green Deal Charges for that Green Deal Plan will need to contact the Green Deal Provider to arrange payment of any monies due before Disconnection can take place.

4.14 In this instance, the DNO/IDNO Party shall also advise the Customer that Disconnection(s) cannot take place until such time as no Active Green Deal Plan is associated to the relevant Metering Point(s).

Step 6 - DNO/IDNO Party agrees work required

4.15 A DNO/IDNO Party shall be entitled to agree any commercial arrangements with the Customer prior to any works commencing in relation to a Disconnection.

Step 7 - Cancellation of the Disconnection(s)

4.16 Where a Customer does not agree a contract with the DNO/IDNO Party or does not settle the quote, the DNO/IDNO Party shall be entitled to cancel the work to be carried out.

4.17 Where the details of a Disconnection request have previously been received via a D0132 *Details of Disconnection of Supply* Data Flow, and the DNO/IDNO Party decides not to proceed with the Disconnection, it shall inform the relevant Supplier Party(ies) within two (2) Working Days of cancellation using a D0262 *Rejection of Disconnection* Data Flow.

Step 8 - DNO/IDNO Party informs Supplier Party(s) of planned Disconnection

4.18 In order to allow that the Supplier Party(ies) affected by the planned Disconnection is able to make any required updates to bill payer accounts, and recover any assets as may be required, the DNO/IDNO Party shall send information relating to Disconnections to the relevant Supplier Party(ies) using a D0352 *Notification of Physical Disconnections* Data Flow.

4.19 The DNO/IDNO Party shall send the D0352 *Notification of Physical Disconnections* Data Flow to notify the Supplier Party of the planned disconnection date as soon as possible, and in any event no later than five (5) Working Days from the date a contractual agreement is in place between the Customer and the DNO/IDNO Party[1].

4.20 Where the DNO/IDNO Party' records indicate any meters are still in situ, it shall ensure that the disconnection date is at least ten (10) Working Days after the date the D0352 *Notification of Physical*

Disconnections Data Flow is sent. Where the DNO/IDNO Party' records indicate no meters are present, this advance notification of Disconnection may be reduced to five (5) Working Days.

4.21 For the avoidance of doubt, the DNO/IDNO Party shall assume that meters are at site if they are unable to verify previous removal.

Step 9 - Supplier Party receives notification of Disconnection

4.22 On receipt of a D0352 *Notification of Physical Disconnections* Data Flow, a Supplier Party shall contact the DNO/IDNO Party via telephone or e-mail as soon as possible, and in any event within five (5) Working Days, if that Supplier Party's records indicate that:

a. any incorrect Metering Points have been identified for Disconnection; or

b. meters are still in situ, and it wishes to agree arrangements to obtain meter reads or asset.

4.23 If the relevant Metering Point is a Related Metering Point, a Supplier Party shall un-relate the Metering Point, as documented in the Retail Energy Code, prior to the disconnection date notified in the D0352 *Notification of Physical Disconnections* Data Flow.

Step 10 - Asset recovery

4.24 Where a Supplier Party wishes to obtain final meter readings and/or recover meter assets from the site, it shall do so prior to the disconnection date notified under Paragraph 4.20.

Step 11 - DNO/IDNO Party carries out Disconnection at site

4.25 Having issued appropriate notifications under Paragraph 4.18, the DNO/IDNO Party shall in the event of a Physical Disconnection carry out the physical site works to disconnect the Metering Point, and, although not obliged to do so, may, if practical, obtain a final meter reading and recover any assets remaining on-site.

Step 12 - DNO/IDNO Party updates counter parties

4.26 Once the disconnection is completed, the DNO/IDNO Party shall:

a. provide a notice to the Customer that the power has been safely Disconnected;

b. provide information to the relevant Meter Operator Agent regarding any assets recovered by the DNO/IDNO Party, and associated final reads;

c. verify that the relevant Metering Point is not a Related Metering Point. If it is not, provide:

i. for non-MHHS a notification to Supplier Parties that the Disconnection has been completed, using the D0125 *Confirmation of Disconnection of Supply* Data Flow, or other means as agreed; and

ii. a notification to its MPAS Provider that the Metering Point has been Disconnected (such notification to be made within five (5) Working Days of the date that the disconnection took place).

4.27 If the relevant Metering Point is still a Related Metering Point, contact the relevant Supplier Party to advise that the Metering Point has not been un-related as set out in Paragraphs 4.9(b) and 4.23.

Step 12A – MPAS sends notification of Disconnection

4.27A For MHHS MPANs, once MPAS has received the notification from the DNO/IDNO Party of the Disconnection

it shall notify the Supplier Party in accordance with the BSC.

Step 13 - Supplier Party sends a Registration De-Activation Request to CSS Provider

4.28 Once the Supplier Party has been notified of the completed Disconnection it shall, in accordance with the Retail Energy Code, contact the DNO/IDNO Party if that Supplier Parties'records indicate that the Metering Point should not have been Disconnected and is still in use.

4.29 Where no issue is identified in accordance with Paragraph 4.28, the Supplier Party shall, on receiving notification of the completed Disconnection, send a Registration De-Activation Request to the CSS Provider in accordance with the Retail Energy Code.

5. MULTI-SITE PHYSICAL DISCONNECTIONS

5.1 This procedure is used where a Disconnection Programme is carried out.

Step 1 - Customer requests disconnection

Step 1a - Customer contacts DNO/IDNO Party

5.2 Where the Customer contacts the relevant DNO/IDNO Party to agree details of a Disconnection Programme, and in order to ensure that the DNO/IDNO Party can provide information to the affected Supplier Party(ies) and schedule the work efficiently, the following shall be collected by the DNO/IDNO Party at a date prior to commencement of any site works in relation to the planned Disconnection:

a. addresses of the properties;

b. date from which the Customer will have responsibility for the site, if not responsible;

c. contact details for the Customer, including name and telephone number for both works relating to any meter asset removal and for site works to Disconnect supplies; and

d. contact details for site access if different to those for the Customer.

5.3 The following information shall be obtained prior to the disconnections being finalised, but is not required to begin the disconnection process:

a. MPANs and Meter Serial Numbers, if known;

b. planned demolition date(s);

c. earliest dates for both meter removal and Disconnection (if meters at site);

d. any Section 80 Notice or Section 81 Notice issued in accordance with the Building Act 1984; and

e. whether any Active Green Deal Plans are associated with any of the Metering Points at properties to be Disconnected.

5.4 Where the Customer is not the person responsible for the sites at the time of initial contact, a DNO/IDNO Party may require that a letter of authority is provided. Any such letter (which may relate to an overall development programme that includes a site purchase and/or clearance) shall:

a. clearly identify the person(s) currently responsible for the property(ies); and

b. confirm the Customer's authority to act in relation to the Disconnection of the supplies.

5.5 Once all relevant information is received, a DNO/IDNO Parties may provide a quote to the Customer within twenty (20) Working Days, in order to minimise delay to the process.

Step 1b - Customer contacts Supplier Party

5.6 Where a Customer has initially contacted a Supplier Party to arrange for the Disconnections to take place, that Supplier Party shall advise the Customer that the disconnections process is led by the DNO/IDNO Party and refer the Customer directly to the relevant DNO/IDNO Party.

5.7 The Supplier Party shall:

a. identify if an Active Green Deal Plan is associated with the relevant Metering Point and if so, shall advise the Customer that a Metering Point cannot be Disconnected where an Active Green Deal Plan is associated to it; and

b. identify if the relevant Metering Point is a Related Metering Point and if so, shall not un-relate the Metering Point, as documented in the Retail Energy Code, until it has received a D0352 *Notification of Physical Disconnections* or the metering system has been removed.

Step 2 - DNO/IDNO Party confirms properties and Metering Points affected

5.8 At the point the Customer contacts the DNO/IDNO Party directly, that DNO/IDNO Party shall obtain, from its MPAS Provider confirmation of:

a. addresses;

b. MPANs for the affected Metering Points (including any indicators of Active Green Deal Plans being associated to any Metering Points); and

c. Supplier Parties impacted by the Disconnection Programme.

5.9 Where the DNO/IDNO Party is not responsible for some or all of the affected Metering Points, and recognising that the supplies may be on a network which does not fall under Great Britain market arrangements, they shall inform the Customer and (to the extent that such information is available to it) provide information regarding the network operator whom the Customer will need to contact.

Step 3 - DNO/IDNO Party checks for Green Deal Plan(s)

5.10 Where an Active Green Deal Plan is associated to one or more relevant Metering Points, the DNO/IDNO Party shall inform the Customer of that fact, and that the person responsible for Green Deal Charges for that Green Deal Plan will need to contact the Green Deal Provider to arrange payment of any monies due before Disconnection can take place.

5.11 In this instance, the DNO/IDNO Party shall also advise the Customer that Disconnections cannot take place until such time as no Active Green Deal Plan is associated with the relevant Metering Point(s).

Step 4 - DNO/IDNO Party agrees work required

5.12 A DNO/IDNO Party shall be entitled to agree any commercial arrangements with the Customer prior to any works commencing in relation to a Disconnection Programme.

Step 5 - Cancellation of the disconnections

5.13 Where a Customer does not agree a contract with the DNO/IDNO Party or does not settle the quote, the DNO/IDNO Party shall be entitled to cancel the work to be carried out.

Step 6 - DNO/IDNO Party informs Supplier Party(ies) of planned disconnections

5.14 In order to allow that the Supplier Party(ies) affected by the planned disconnections are able to make any required updates to bill payer accounts, and recover any assets as may be required, the DNO/IDNO Party shall send information relating to the Disconnections to each relevant Supplier Party using a D0352 *Notification of Physical Disconnections* Data Flow.

5.15 The DNO/IDNO Party shall send the D0352 *Notification of Physical Disconnections* Flow to notify the Supplier Party of the planned disconnection date as soon as possible, and in any event no later than five (5) Working Days from the date a contractual agreement is in place between the Customer and the DNO/IDNO Party.

5.16 Where the DNO/IDNO Party' records indicate any meters are still in situ, it shall ensure that the disconnection date is at least 25 (twenty-five) Working Days after the date the D0352 *Notification of Physical Disconnections* Data Flow is sent. Where the DNO/IDNO Party' records indicate no meters are present the advance notification of Disconnection may be reduced to five (5) Working Days.

5.17 For the avoidance of doubt, DNO/IDNO Parties shall assume that meters are at site if they are unable to verify previous removal.

Step 7 - Supplier Party receives notification of Disconnection

5.18 On receipt of a D0352 *Notification of Physical Disconnections* Data Flow, a Supplier Party shall contact the DNO/IDNO Party, via telephone or e-mail, as soon as possible and in any event within five (5) Working Days, if that Supplier Party's records indicate that:

a. any incorrect Metering Points have been identified for Disconnection;

b. meters are still in situ, and it wishes to agree arrangements to obtain meter reads or asset; or

c. there is any other relevant issue with any Metering Point.

5.19 If any relevant Metering Point is a Related Metering Point, a Supplier Party shall un-relate the Metering Point, as documented in the Retail Energy Code, prior to the disconnection date notified in the D0352 *Notification of Physical Disconnections* Data Flow.

Step 8 - Asset Recovery

5.20 Where a Supplier Party wishes to obtain final meter readings and/or recover meter assets from the site(s), it shall do so prior to the disconnection date(s) notified under Paragraph 5.15 of this procedure.

Step 9 - DNO/IDNO Party carries out Disconnections at site.

5.21 Having issued appropriate notices under Paragraph 5.14, the DNO/IDNO Party may carry out the physical site works to Disconnect the Metering Points and, although not obliged to do so, may, if practical, obtain final meter readings and recover any assets remaining on-site.

Step 10 - DNO/IDNO Party updates affected parties

5.22 Once the Disconnection is completed, the DNO/IDNO Party shall provide:

a. provide a notice to the Customer that the power has been safely Disconnected;

b. provide information to the relevant Meter Operator Agent regarding any assets recovered by the DNO/IDNO Party, and associated final reads;

c. verify that the relevant Metering Point is not a Related Metering Point. If it is not, provide:

i. fpr non-MHHS, a notification to Supplier Party(ies) that the Disconnection has been completed, using the D0125 *Confirmation of Disconnection of Supply* Data Flow, or other means as agreed; and

ii. a notification to its MPAS Provider that the Metering Point has been Disconnected (such notification to be made within five (5) Working Days of the date that the disconnection took place).

5.23 If the relevant Metering Point is still a Related Metering Point, contact the relevant Supplier Party to advise that the Metering Point has not been un-related as set out in Paragraphs 5.7(b) and 5.19.

Step 10A – MPAS sends notification of Disconnection

5.23A For MHHS MPANs, once MPAS has received the notification from the DNO/IDNO Party of the Disconnection it shall notify the Supplier Party in accordance with the BSC.

Step 11 - Supplier Party sends a Registration De-Activation Request to CSS Provider

5.24 Once the Supplier Party has been notified of the completed Disconnection it shall, in accordance with the Retail Energy Code, contact the DNO/IDNO Party if that Supplier Parties' records indicate that the Metering Point should not have been Disconnected and is still in use.

5.25 Where no issue is identified in accordance with Paragraph 5.24, the Supplier Party shall, on receiving notification of the completed Disconnection, send a Registration De-Activation Request to the CSS Provider in accordance with the Retail Energy Code.

6. LOGICAL DISCONNECTIONS

6.1 This procedure is used where a Logical Disconnection is required.

Step 1 - Notifying the DNO/IDNO Party of a request for disconnection of supply

6.2 The Supplier Party shall:

a. identify if an Active Green Deal Plan is associated with the relevant Metering Point. If so, the Supplier Party shall identify if another Metering Point exists at the property for the same Customer; and

i. if another Metering Point exists at the property for the same Customer, the Supplier Party shall arrange to transfer the Green Deal Plan to the other Metering Point as defined in the Retail Energy Code; or

ii. if no other Metering Point exists at the property for the same Customer, the Supplier Party shall not disconnect the Metering Point until such time as there is no Active Green Deal Plan associated with it; and

b. identify if the relevant Metering Point is a Related Metering Point as the Supplier Party will need to un-relate the Metering Point as documented in the Retail Energy Code, before the DNO/IDNO Party can proceed with the disconnection request.

6.3 The Supplier Party shall ensure that there is no foreseeable future use for the Metering Point and in those circumstances shall request a Logical Disconnection via the relevant DNO/IDNO Party using a D0132 *Request for Disconnection of Supply* Data Flow.

6.4 The Supplier Party shall follow these principles when populating a D0132 *Request for Disconnection of Supply* Data Flow:

a. the 'Disconnection Type' (Data Item J1648) shall be populated with a value of 'A' to indicate a Logical Disconnection (redundancy of an additional MPAN);

b. any information that enables the DNO/IDNO Party to undertake their responsibilities, including the reason for the request, details of De-energisation works (where appropriate), and an explanation of why there is no foreseeable future use for the Metering Point, shall be detailed in the Additional Information field (Data Item J0012); and

c. the Appointment Date (Data Item J0174) should be the date that any additional MPAN was made redundant. The DNO/IDNO Party shall use this as the date of disconnection of the MPAN.

Step 2 - DNO/IDNO Party receives details of disconnection

6.5 Following receipt of a D0132 Data Flow requesting a Logical Disconnection, a DNO/IDNO Party shall respond to the Supplier Party within five (5) Working Days, either:

a. for non MHHS, accepting the request using a D0125 *Confirmation of Disconnection of Supply* Data Flow, or other means as agreed; or

b. rejecting the request using a D0262 *Rejection of Disconnection* Data Flow.

6.6 For the avoidance of doubt, the DNO/IDNO Party should always reject the disconnection request if the relevant Metering Point is a Related Metering Point, there is an Active Green Deal Plan associated with it, or MPAS indicates metering is still present.

Step 3 - DNO/IDNO Party notifies MPAS of disconnection

6.7 The DNO/IDNO Party shall issue a notification to its MPAS Provider within five (5) Working Days of confirming acceptance of the Supplier Party's request.

Step 3A – MPAS sends notification of Disconnection

6.7A For MHHS MPANs, once MPAS has received the notification from the DNO/IDNO Party of the Disconnection it shall notify the Supplier Party in accordance with the BSC.

Step 4 - Supplier Party sends Registration De-Activation Request to CSS Provider

6.8 The Supplier Party shall, on receiving notification of the accepted Disconnection, send a Registration De-Activation Request to the CSS Provider in accordance with the Retail Energy Code.

7. LOGICAL DISCONNECTIONS - BULK UPDATES

7.1 A bulk update will be deemed to be 50 or more requests at any one time per Supplier Party. That Supplier Party will then enter into a bi-lateral agreement with the appropriate DNO/IDNO Party. The DNO/IDNO Party will determine the progress of such a request based on the number of similar requests received at any given

time. It is expected that the requesting Supplier Party will have carried out all the relevant checks as per an individual request as outlined in Paragraph 6 above prior to submitting a bulk request.